LAKE COUNTY ASTATULA REFUELING FACILITY
FDEP FACILITY No. 358622951
13130 LANDFILL ROAD
ASTATULA, LAKE COUNTY, FLORIDA

SHAW PROJECT NO. 130385

MAY 2010

SHEET INDEX	
DRAWING No.	TITLE
C-1	REMEDIAL SYSTEM LAYOUT
C-2	TRENCH SECTION DETAILS
C-3	INTERMEDIATE AND NESTED DEEP/DEEPER RECOVERY WELL DETAIL
C-4	RECOVERY WELL DETAIL
C-5	INFILTRATION GALLERY
C-6	REMEDIAL COMPOUND
C-7	RECOVERY WELL, VAULT, CONTROL PANEL AND BOLLARD LAYOUT
C-8	INLET MANIFOLD
P-1	PROCESS AND INSTRUMENTATION DIAGRAM LEGEND
P-2	PROCESS AND INSTRUMENTATION DIAGRAM

1228 WINTER GARDEN VINELAND ROAD
WINTER GARDEN, FLORIDA 34787
(800) 552-2038

Shaw Environmental, Inc.

DRAWN BY	SDJF 5-21-10	CHECKED BY APPROVED BY		DRAWING NUMBER	130385-B31

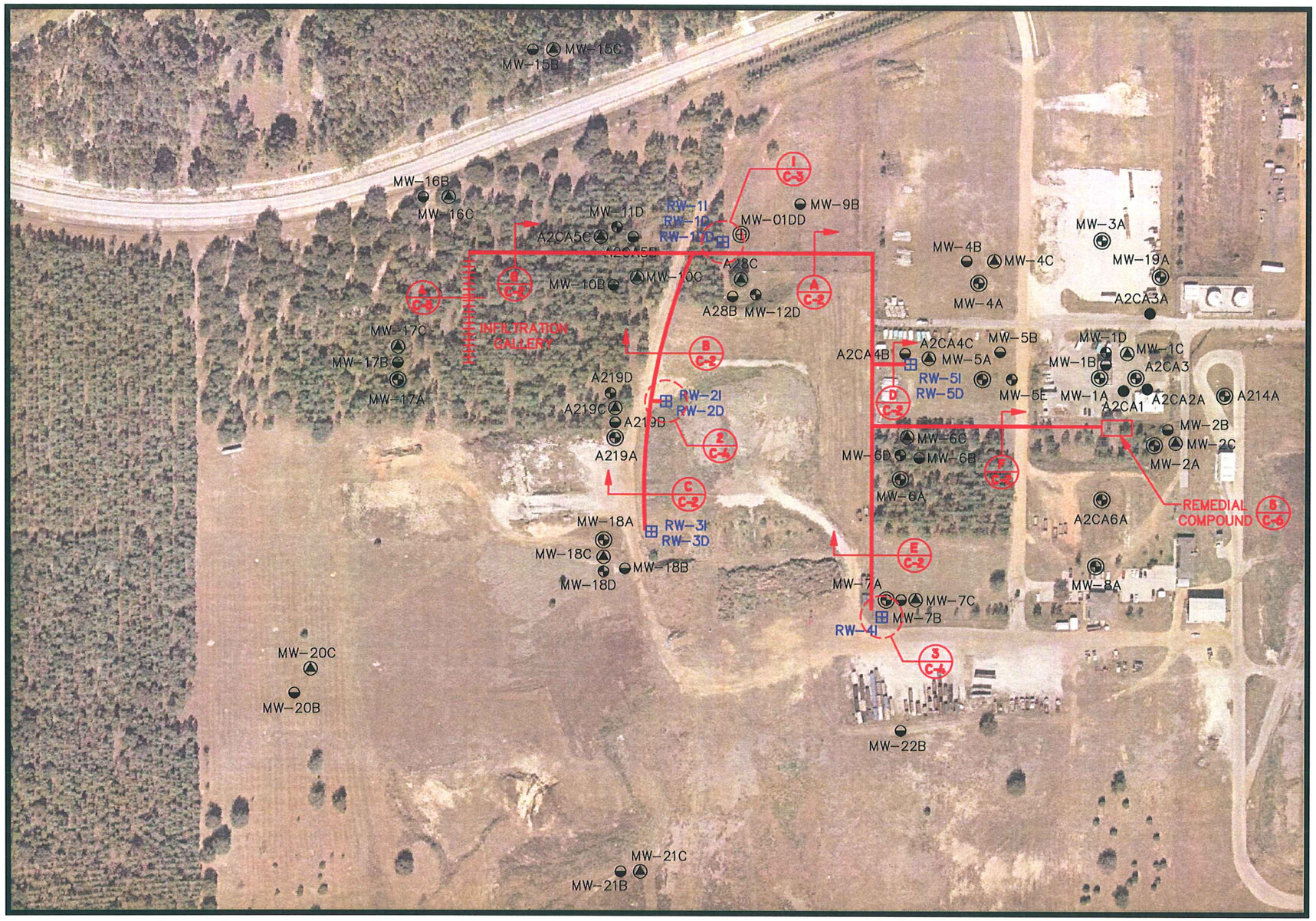

SCALE

0 230 460 FEET

LEGEND:

MW-7A	SHALLOW MONITORING WELL LOCATION
MW-7B	INTERMEDIATE MONITORING WELL LOCATION
MW-7C	DEEP MONITORING WELL LOCATION
MW-12D	DEEPER MONITORING WELL LOCATION
MW-01DD	DEEPEST MONITORING WELL LOCATION
A2CA1	FREE PRODUCT WELL LOCATION
RW-3	GROUNDWATER RECOVERY WELL LOCATION
	RECOVERY WELL PIPING/ CONDUIT ALIGNMENT

SHEET C-I

REMEDIAL SYSTEM LAYOUT

LAKE COUNTY ASTATULA REFUELING FACILITY
FDEP FACILITY No. 358622951
13130 COUNTY LANDFILL ROAD
TAVARES, FLORIDA 32778

PREPARED FOR

FLORIDA DEPARTMENT OF ENVIRONMENTAL PROTECTION
LAKE COUNTY, FLORIDA

Shaw Shaw Environmental, Inc.

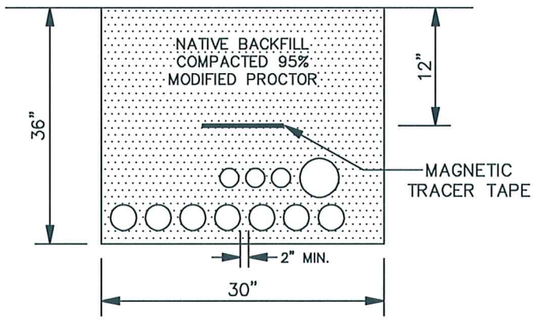

(7) 2" DIA. PE4710 DR9 GW PIPES
(RW-3I, RW-3D, RW-2I, RW-2D, RW-1I, RW-1D, RW-1DD)
(3) 1" DIA. PE4710 DR9 ELECTRICAL CONDUIT
(CONTROL and POWER RW-1, RW-2 and RW-3, PIEZOMETER)
(1) 4" DIA. PE4710 DR9 EFFLUENT DISCHARGE PIPE

SECTION A-A

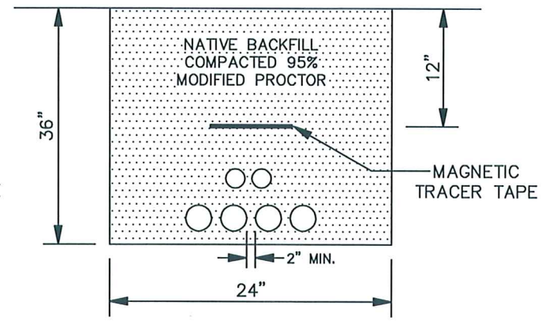

(4) 2" DIA. PE4710 DR9 GW PIPES
(RW-3I, RW-3D, RW-2I, RW-2D)
(2) 1" DIA. PE4710 DR9 ELECTRICAL CONDUIT
(CONTROL and POWER RW-2 and RW-3)

SECTION B-B

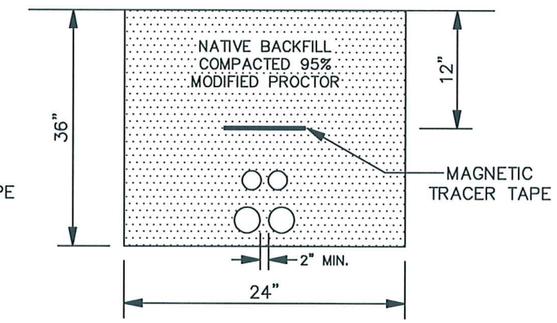

(2) 2" DIA. PE4710 DR9 GW PIPES (RW-3I, RW-3D)
(2) 1" DIA. PE4710 DR9 ELECTRICAL CONDUIT
(CONTROL and POWER RW-3)

SECTION C-C

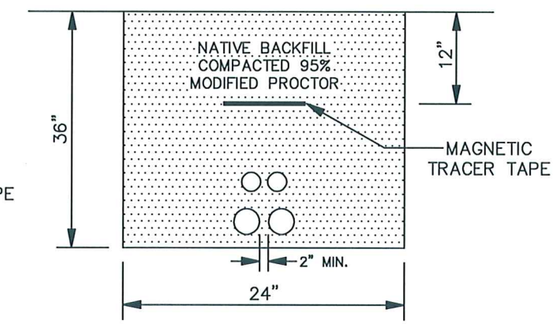

(2) 2" DIA. PE4710 DR9 GW PIPES (RW-5I, RW-5D)
(2) 1" DIA. PE4710 DR9 ELECTRICAL CONDUIT
(CONTROL and POWER RW-5)

SECTION D-D

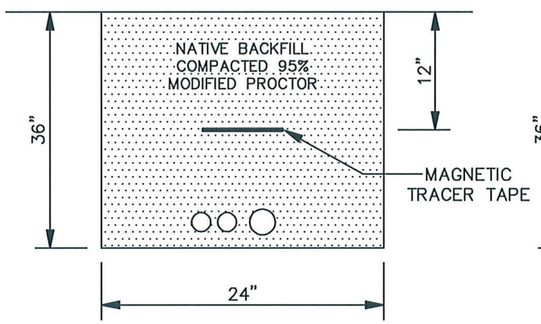

(1) 2" DIA. PE4710 DR9 GW PIPE (RW-4I)
(2) 1" DIA. PE4710 DR9 ELECTRICAL CONDUIT (RW-4I)
(CONTROL and POWER RW-4)

SECTION E-E

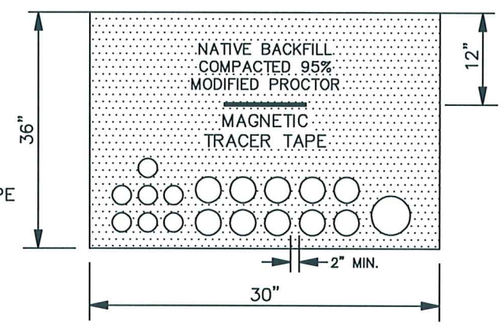

(10) 2" DIA. PE4710 DR9 GW PIPES (RW-1I, RW-1D, RW-1DD, RW-2I, RW-2D, RW-3I, RW-3D, RW-4I, RW-5I, RW-5D)
(7) 1" DIA. PE4710 DR9 ELECTRICAL CONDUIT
(CONTROL and POWER RW-1, RW-2, RW-3; CONTROL and POWER RW-4; CONTROL and POWER RW-5, PIEZOMETER)
(1) 4" DIA. PE4710 DR9 EFFLUENT DISCHARGE PIPE

SECTION F-F

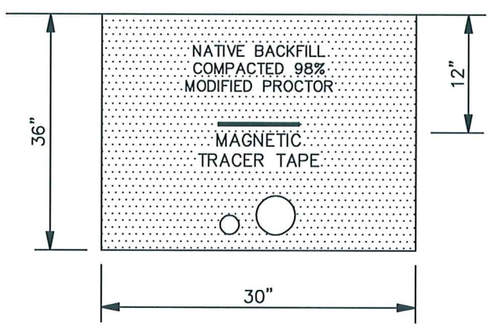

(1) 1" DIA. PE4710 DR9 PIEZOMETER
(1) 4" DIA. PE4710 DR9 EFFLUENT DISCHARGE PIPE

SECTION G-G

NOTE:

MINIMUM COVER DEPTH OVER PIPE IS 24". FIELD ARRANGE PIPE PLACEMENT TO CREATE GREATEST COVER DEPTH.

SHEET C-2

TRENCH SECTION DETAILS
LAKE COUNTY ASTATULA REFUELING FACILITY
FDEP FACILITY No. 358622951
13130 COUNTY LANDFILL ROAD
TAVARES, FLORIDA 32778

PREPARED FOR

FLORIDA DEPARTMENT OF ENVIRONMENTAL PROTECTION
LAKE COUNTY, FLORIDA

Shaw Shaw Environmental, Inc.

DRAWN BY	SDJF 5-21-10	CHECKED BY		DRAWING NUMBER	130385-B27
		APPROVED BY			

DRAWN BY	SDJF 5-21-10	CHECKED BY APPROVED BY			DRAWING NUMBER	130385-B42

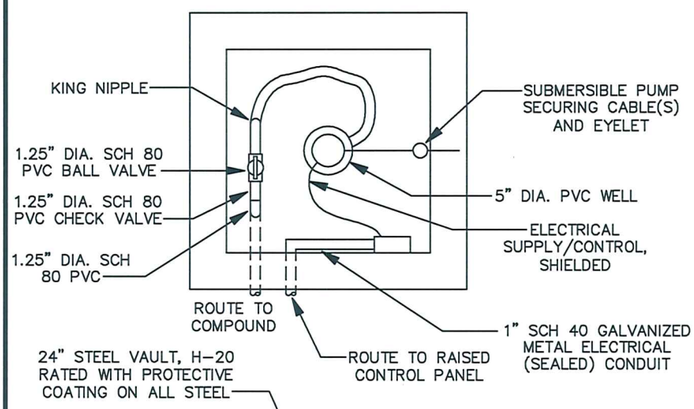

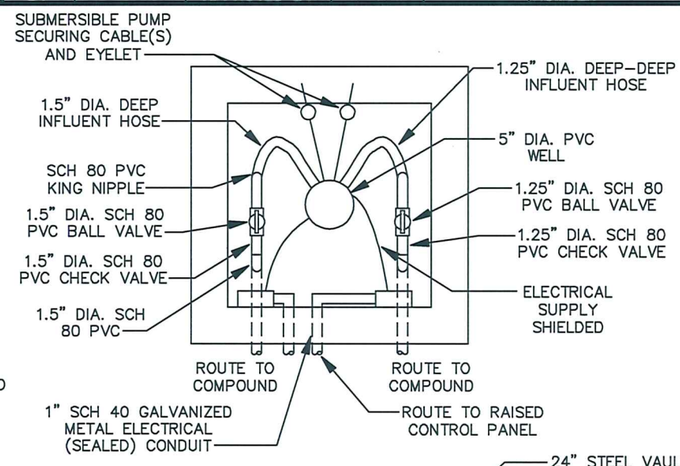

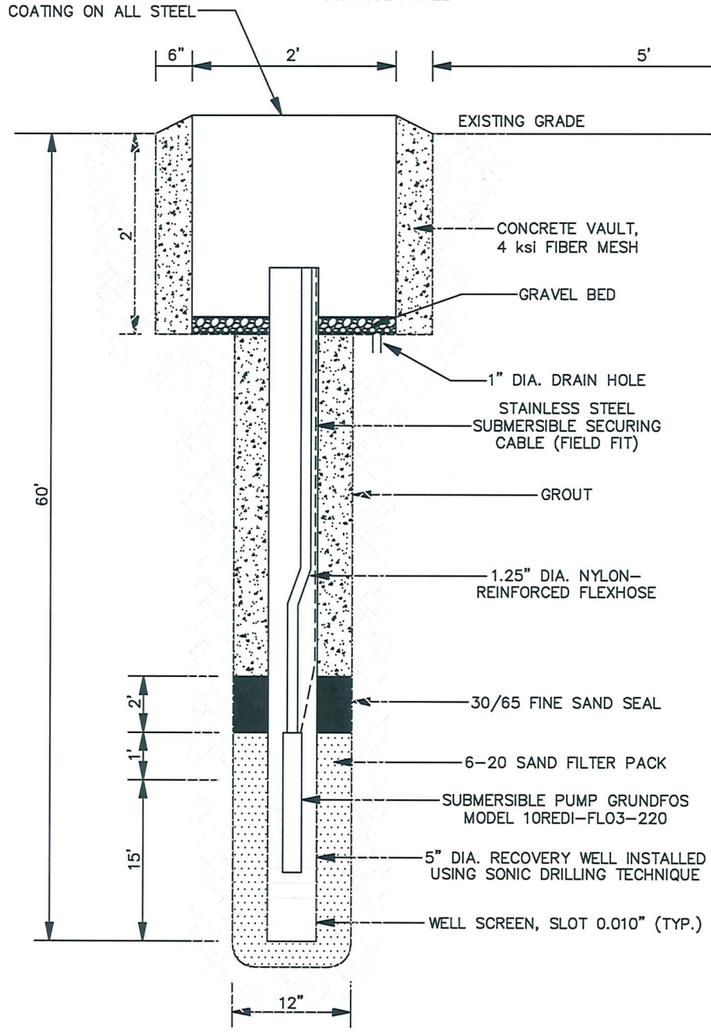

RW-1I

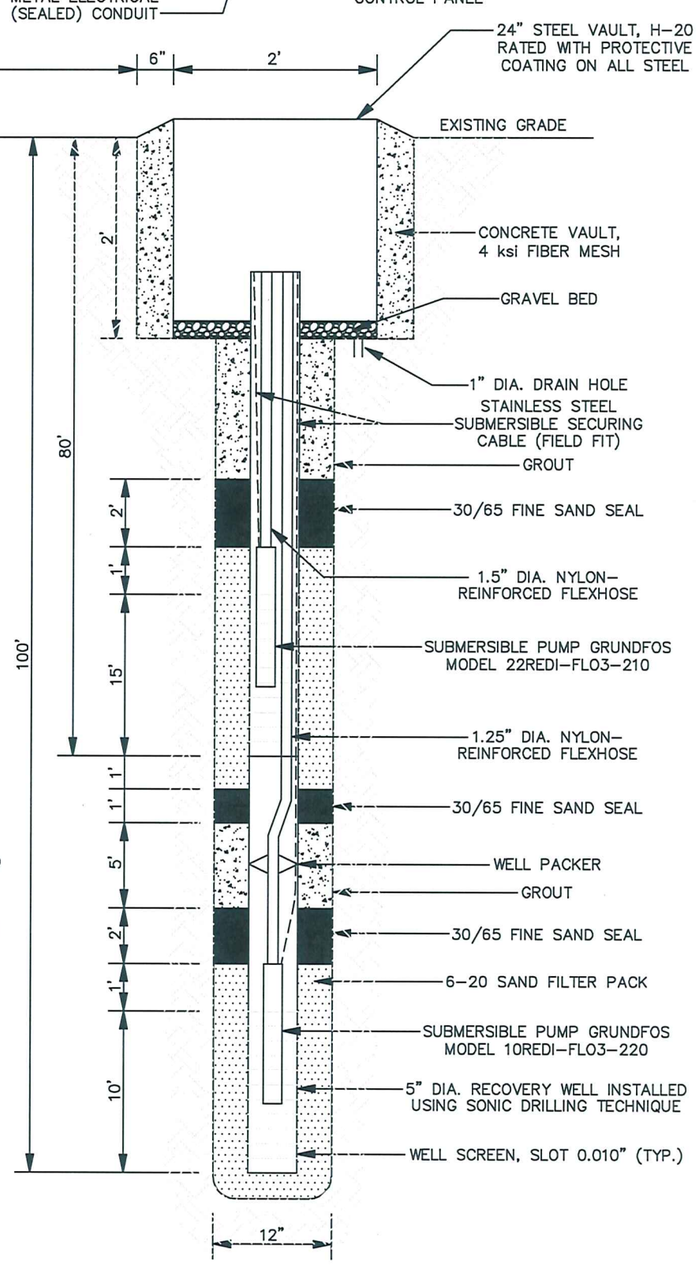

RW-1D/RW-1DD

INTERMEDIATE AND NESTED DEEP/DEEPER RECOVERY WELL DETAIL

I / C-I

NOT TO SCALE

SHEET C-3

INTERMEDIATE AND NESTED DEEP/ DEEPER RECOVERY WELL DETAIL
LAKE COUNTY ASTATULA REFUELING FACILITY
FDEP FACILITY No. 358622951
13130 COUNTY LANDFILL ROAD
TAVARES, FLORIDA 32778

PREPARED FOR

FLORIDA DEPARTMENT OF ENVIRONMENTAL PROTECTION
LAKE COUNTY, FLORIDA

Shaw Shaw Environmental, Inc.

NOTES:

1. ALL PIPES and CONDUIT ROUTED UNDER VAULT WALLS.
2. MAINTAIN 12" MIN. SEPARATION OF ELECTRICAL CONTROL WIRES.
3. ALL WIRING FROM CU 300 TO WELL PUMP MUST BE SHIELDED ACCORDING TO PUMP MANUFACTURER'S RECOMMENDATIONS.

DRAWN BY	SDJF 5-21-10	CHECKED BY APPROVED BY			DRAWING NUMBER	130385-B41

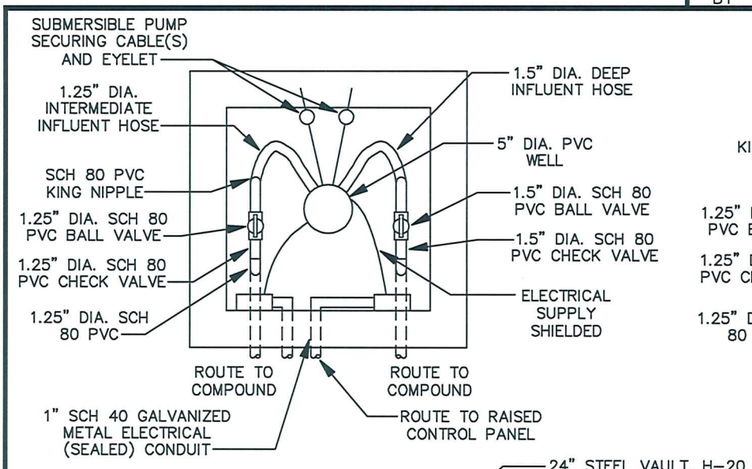

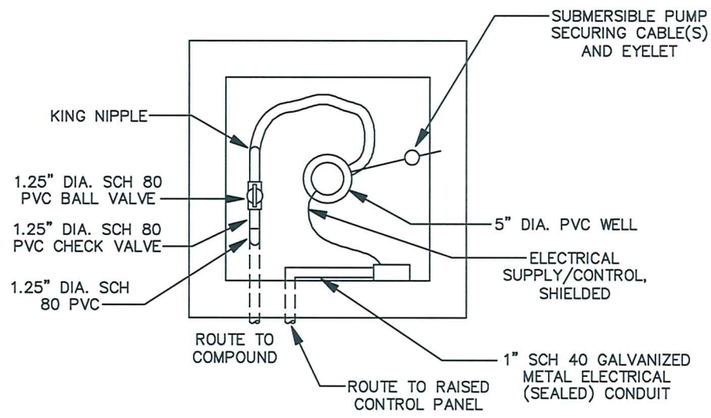

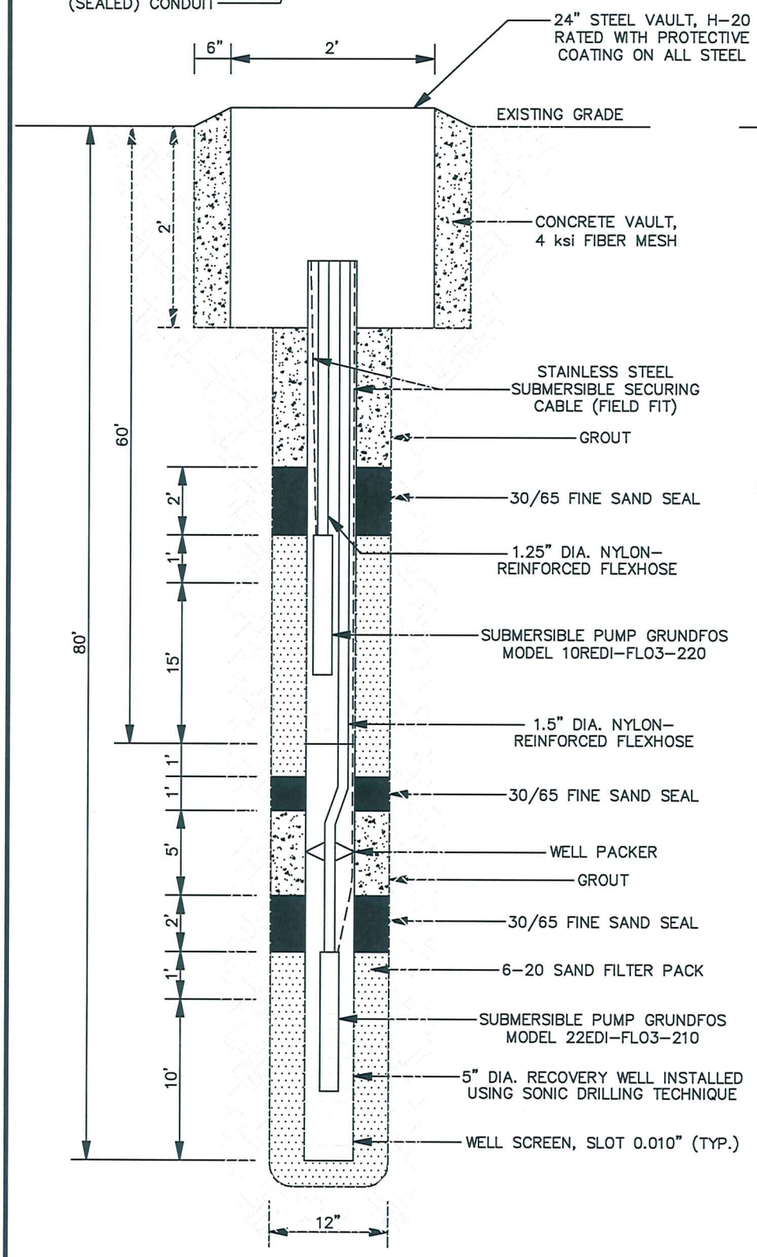

NESTED INTERMEDIATE/DEEP RECOVERY WELL DETAIL (RW-2I/2D, RW-3I/3D AND RW-5I/5D) (2 / C-I)

NOT TO SCALE

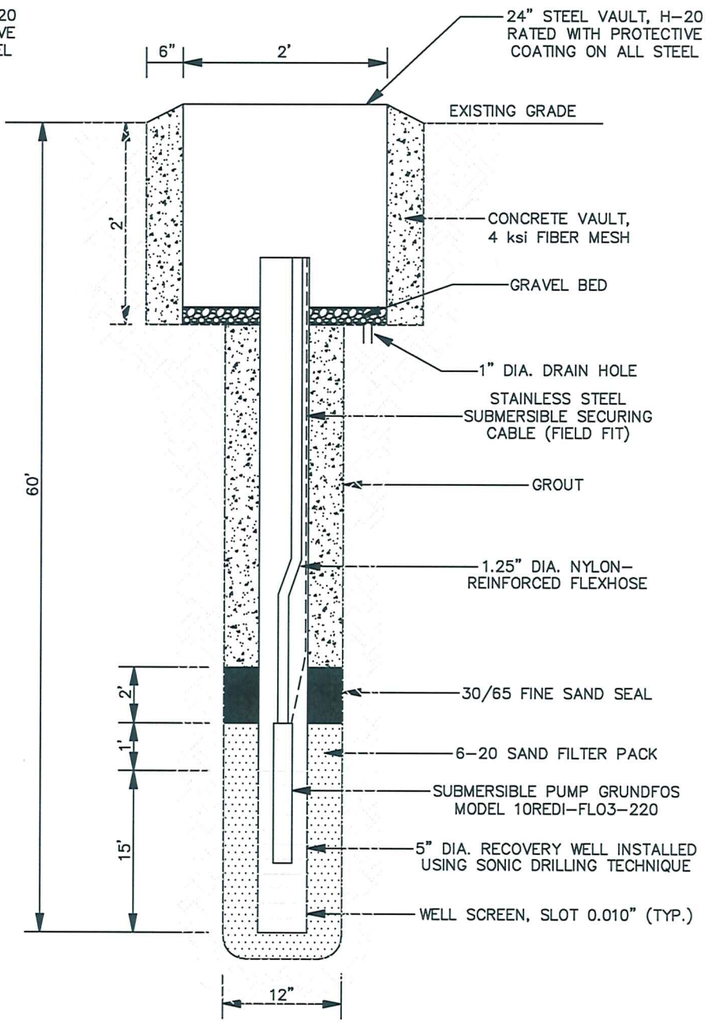

INTERMEDIATE RECOVERY WELL DETAIL (RW-4I) (3 / C-I)

NOT TO SCALE

NOTES:

1. ALL PIPES and CONDUIT ROUTED UNDER VAULT WALLS.
2. MAINTAIN 12" MIN. SEPARATION OF ELECTRICAL CONTROL WIRES.
3. ALL WIRING FROM CU 300 TO WELL PUMP MUST BE SHIELDED ACCORDING TO PUMP MANUFACTURER'S RECOMMENDATIONS.

SHEET C-4

RECOVERY WELL DETAIL
LAKE COUNTY ASTATULA REFUELING FACILITY
FDEP FACILITY No. 358622951
13130 COUNTY LANDFILL ROAD
TAVARES, FLORIDA 32778

PREPARED FOR

FLORIDA DEPARTMENT OF ENVIRONMENTAL PROTECTION
LAKE COUNTY, FLORIDA

Shaw Shaw Environmental, Inc.

DRAWN BY	SDJF 5-21-10	CHECKED BY / APPROVED BY		DRAWING NUMBER	130385-B34

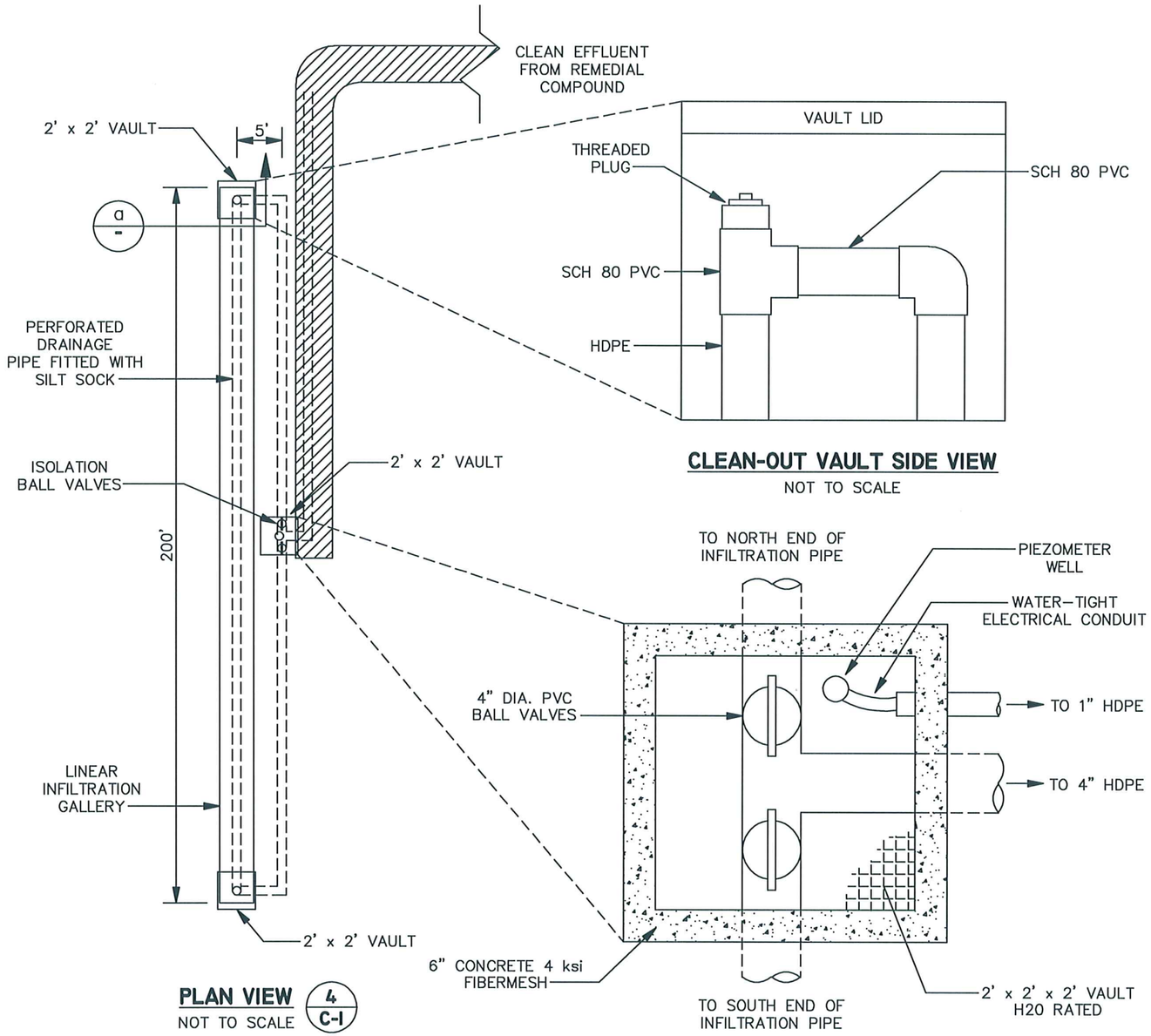

CLEAN-OUT VAULT SIDE VIEW

NOT TO SCALE

PLAN VIEW (4 / C-1)

NOT TO SCALE

TERMINAL BOX PLAN VIEW

NOT TO SCALE

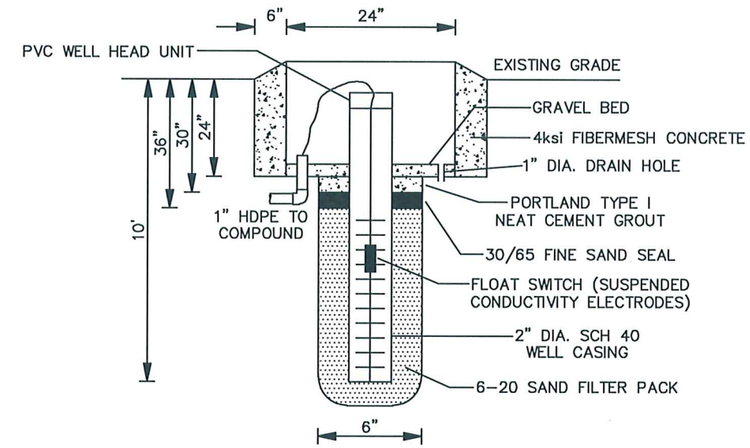

TERMINAL BOX SIDE VIEW

(4" COMPONENTS REMOVED FOR CLARITY)

NOT TO SCALE

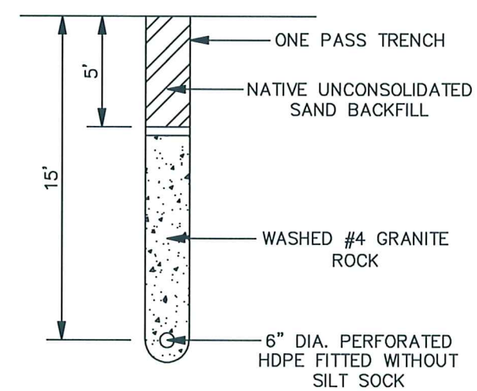

SECTION (a / -)

NOT TO SCALE

SHEET C-5

INFILTRATION GALLERY

LAKE COUNTY ASTATULA REFUELING FACILITY
FDEP FACILITY No. 358622951
13130 COUNTY LANDFILL ROAD
ASTATULA, LAKE COUNTY, FLORIDA

PREPARED FOR

FLORIDA DEPARTMENT OF ENVIRONMENTAL PROTECTION
LAKE COUNTY, FLORIDA

Shaw Shaw Environmental, Inc.

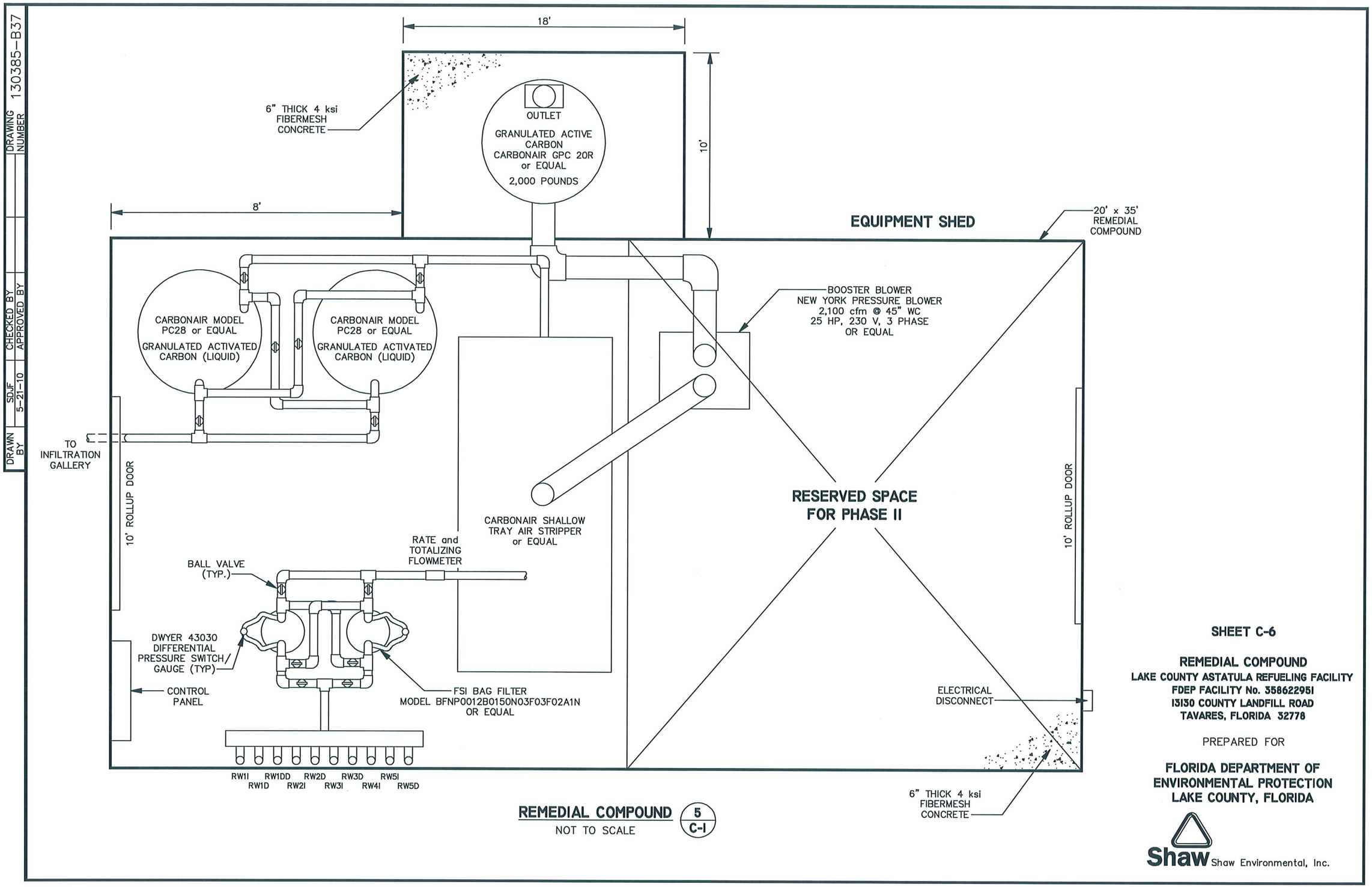

REMEDIAL COMPOUND (5 / C-1)

NOT TO SCALE

DRAWN BY	SDJF 5-21-10	CHECKED BY	APPROVED BY	DRAWING NUMBER	130385-B37

SHEET C-6

REMEDIAL COMPOUND

LAKE COUNTY ASTATULA REFUELING FACILITY
FDEP FACILITY No. 358622951
13130 COUNTY LANDFILL ROAD
TAVARES, FLORIDA 32778

PREPARED FOR

FLORIDA DEPARTMENT OF ENVIRONMENTAL PROTECTION
LAKE COUNTY, FLORIDA

Shaw Shaw Environmental, Inc.

DRAWN BY	SDJF 5-21-10	CHECKED BY APPROVED BY		DRAWING NUMBER	130385-B39

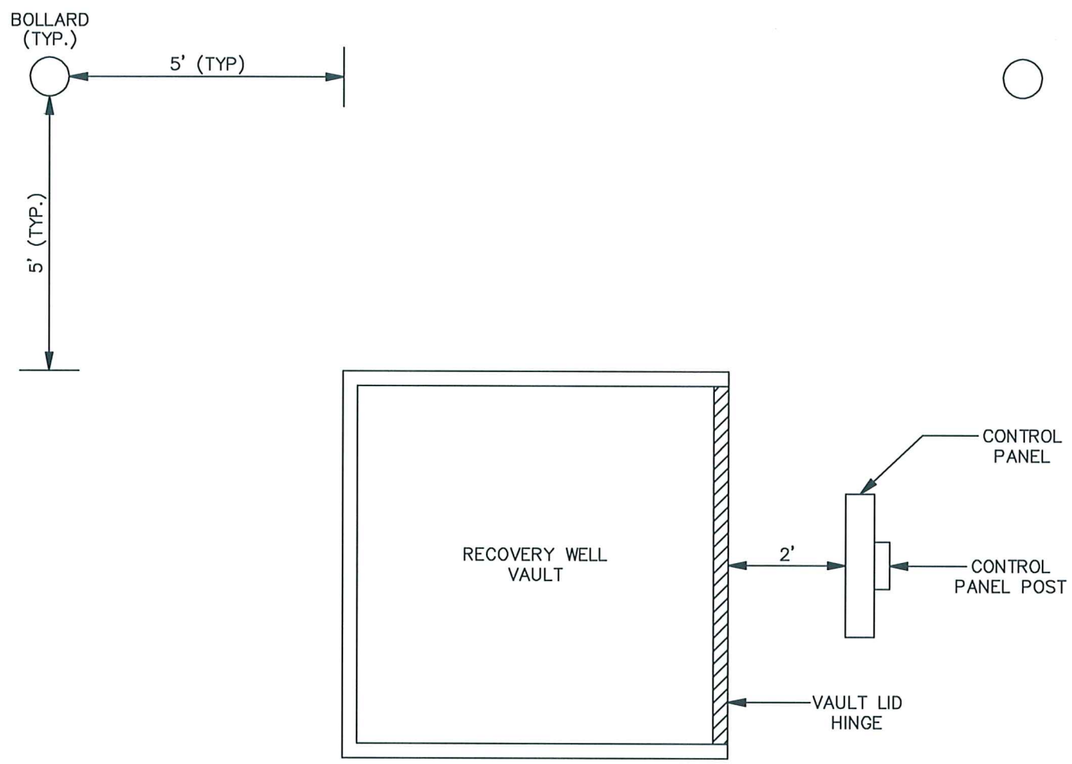

SHEET C-7

RECOVERY WELL, VAULT, CONTROL PANEL AND BOLLARD LAYOUT

LAKE COUNTY ASTATULA REFUELING FACILITY
FDEP FACILITY No. 358622951
13130 COUNTY LANDFILL ROAD
ASTATULA, LAKE COUNTY, FLORIDA

PREPARED FOR

FLORIDA DEPARTMENT OF ENVIRONMENTAL PROTECTION
LAKE COUNTY, FLORIDA

Shaw Shaw Environmental, Inc.

DRAWN BY	SDJF 5-21-10	CHECKED BY		DRAWING NUMBER	130385-B40
		APPROVED BY			

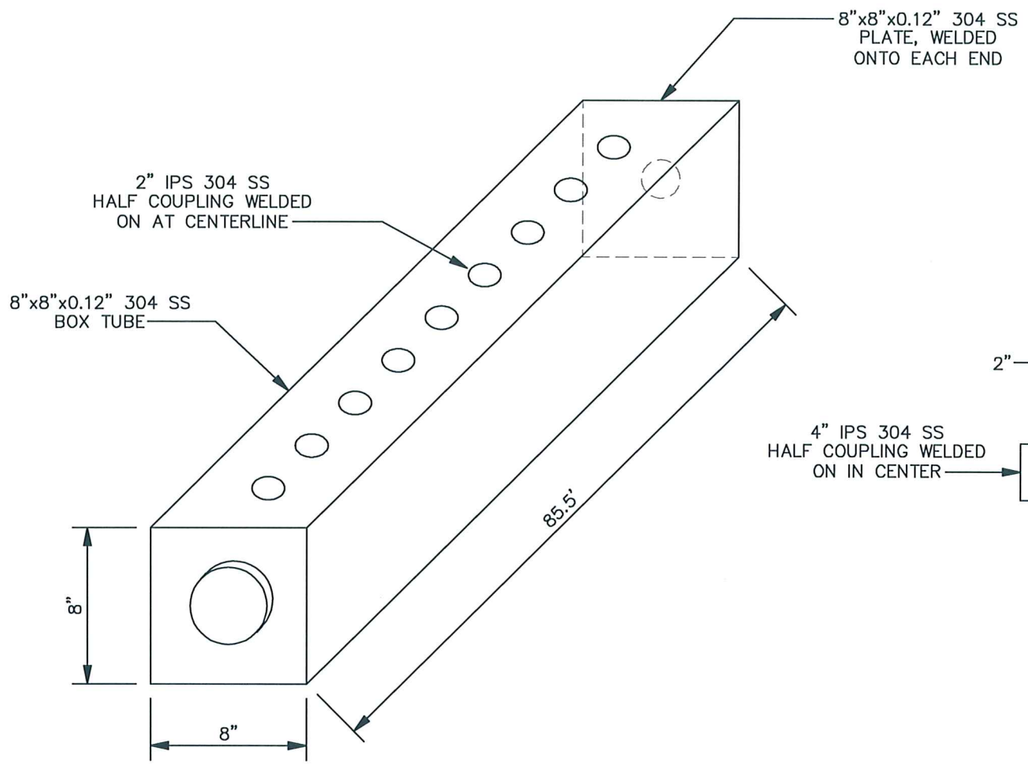

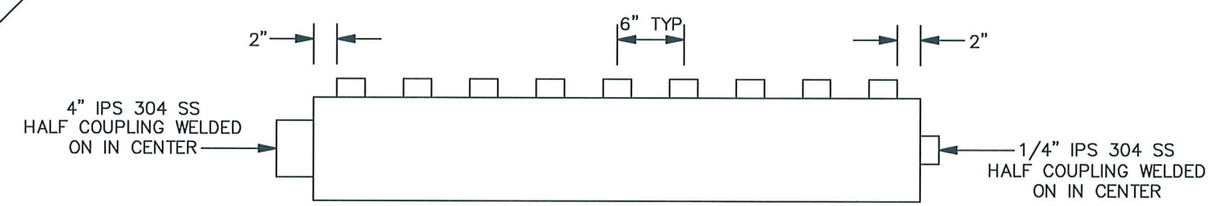

NOTE:

MANIFOLD SHALL BE SUPPORTED BY AT LEAST 4 VERTICALLY-MOUNTED SECTIONS OF 1-5/8" UNISTRUT WHICH TOGETHER MUST BE CAPABLE OF SUPPORTING AT LEAST 300 POUNDS.

SHEET C-8

INLET MANIFOLD

LAKE COUNTY ASTATULA REFUELING FACILITY
FDEP FACILITY No. 358622951
13130 COUNTY LANDFILL ROAD
ASTATULA, LAKE COUNTY, FLORIDA

PREPARED FOR

FLORIDA DEPARTMENT OF ENVIRONMENTAL PROTECTION
LAKE COUNTY, FLORIDA

Shaw Shaw Environmental, Inc.

DRAWN BY	SDJF 5-21-10	CHECKED BY / APPROVED BY		DRAWING NUMBER 130385-B26

EQUIPMENT SYMBOLS

- PUMP
- BLOWER
- COMPRESSOR
- HEAT EXCHANGER
- MOISTURE SEPARATOR
- GRANULAR ACTIVATED CARBON VESSEL
- SUBMERSIBLE PUMP
- PARTICLE FILTER
- SILENCER

GENERAL INSTRUMENT SYMBOLS

ONE VARIABLE	TWO VARIABLES	
		LOCALLY MOUNTED
		PANEL MOUNTED
		REAR-OF-PANEL MOUNTED
I		INTERLOCK
		PROGRAMMABLE LOGIC CONTROLLER (PLC)
A		ALARM

LINE SYMBOLS

- PROCESS PIPES OR CHANNELS
- GAS PIPING
- WATER PIPING
- FLEXIBLE HOSE
- ELECTRIC SIGNAL

VALVE AND PIPING SYMBOLS

- BALL VALVE
- GATE VALVE
- BUTTERFLY VALVE
- BALL CHECK VALVE
- SWING CHECK VALVE
- 3-WAY VALVE
- RELIEF OR SAFETY VALVE
- PRESSURE REGULATING VALVE
- Y-TYPE STRAINER
- THREADED/GENERAL CONNECTION
- CAMLOCK CONNECTION
- FLANGE CONNECTION
- ENTRANCE/EXIT
- FLOW DIRECTION
- BUSHING
- UNION
- SCH 80 PVC TO HDPE CONNECTION

INSTRUMENT IDENTIFICATION

FIT 100A

FIT-100

- LOOP NUMBER
- SUCCEEDING LETTERS
- FIRST LETTER

PIPING MATERIAL IDENTIFICATION

CPVC	CHLORINATED POLYVINYL CHLORIDE
CSP	CARBON STEEL
COP	COPPER
GAL	GALVANIZED STEEL
PE	POLYETHYLENE
PP	POLYPROPYLENE
PVC	POLYVINYL CHLORIDE
SS	STAINLESS STEEL

PROCESS PIPING IDENTIFICATION

- PROCESS PIPE
- PIPE DIAMETER (INCHES)

2" XXX-YY

- PIPING MATERIAL IDENTIFICATION
- PROCESS LINE ABBREVIATION

INSTRUMENT IDENTIFICATION TABLE

	FIRST LETTER		SUCCEEDING LETTERS		
	MEASURED OR INITIATING VARIABLE	MODIFIER	READOUT OR PASSIVE FUNCTION	OUTPUT FUNCTION	MODIFIER
A	ANALYSIS		ALARM		
B	BURNER FLAME				
C	CONDUCTIVITY			CONTROL	
D	DENSITY (SP. GR.)	DIFFERENTIAL			
E	VOLTAGE		PRIMARY ELEMENT		
F	FLOW RATE		INDICATOR		
G	GAGING (DIMENSIONAL)		GLASS		
H	HAND (MANUAL)				HIGH
I	CURRENT		INDICATE		
J	POWER	SCAN			
K	TIME OR SCHEDULE			CONTROL STATION	
L	LEVEL		LIGHT (PILOT)		LOW
M	MOISTURE OR HUMIDITY				MIDDLE
N					
O	ORGANIC VAPOR		ORIFICE		
P	PRESSURE OR VACUUM		POINT (TEST)		
Q	QUANT. OR EVENT	INTEGRATE			
R	RADIOACTIVITY		RECORD OR PRINT		
S	SPEED OR FREQ.	SAFETY		SWITCH	
T	TEMPERATURE			TRANSMIT	
U	MULTIVARIABLE		MULTIFUNCTION		
V	VISCOSITY			VALVE OR DAMPER	
W	WEIGHT OR FORCE		WELL		
X	UNCLASSIFIED		UNCLASSIFIED		
Y				RELAY OR COMPUTE	
Z	POSITION			DRIVE, ACTUATE	

PRIMARY ELEMENT SYMBOLS - FLOW

- ROTAMETER
- PITOT TUBE
- AVERAGING PITOT TUBE
- VENTURI OR FLOW TUBE
- TOTALIZING FLOWMETER
- TURBINE OR PROPELLER TYPE METER

VALVE OPERATOR SYMBOLS

- T — HANDWHEEL OR LEVER
- S — SOLENOID
- M — MOTOR, ELECTRIC

FUNCTION ABBREVIATIONS

LR	LOCAL-REMOTE
NO	NORMALLY OPEN
NC	NORMALLY CLOSED
OC	OPEN-CLOSE
OO	ON-OFF (MAINTAINED)

SHEET P-1

PROCESS & INSTRUMENTATION DIAGRAM LEGEND

LAKE COUNTY ASTATULA REFUELING FACILITY
FDEP FACILITY No. 358622951
13130 COUNTY LANDFILL ROAD
ASTATULA, LAKE COUNTY, FLORIDA

PREPARED FOR

FLORIDA DEPARTMENT OF ENVIRONMENTAL PROTECTION
LAKE COUNTY, FLORIDA

Shaw Shaw Environmental, Inc.

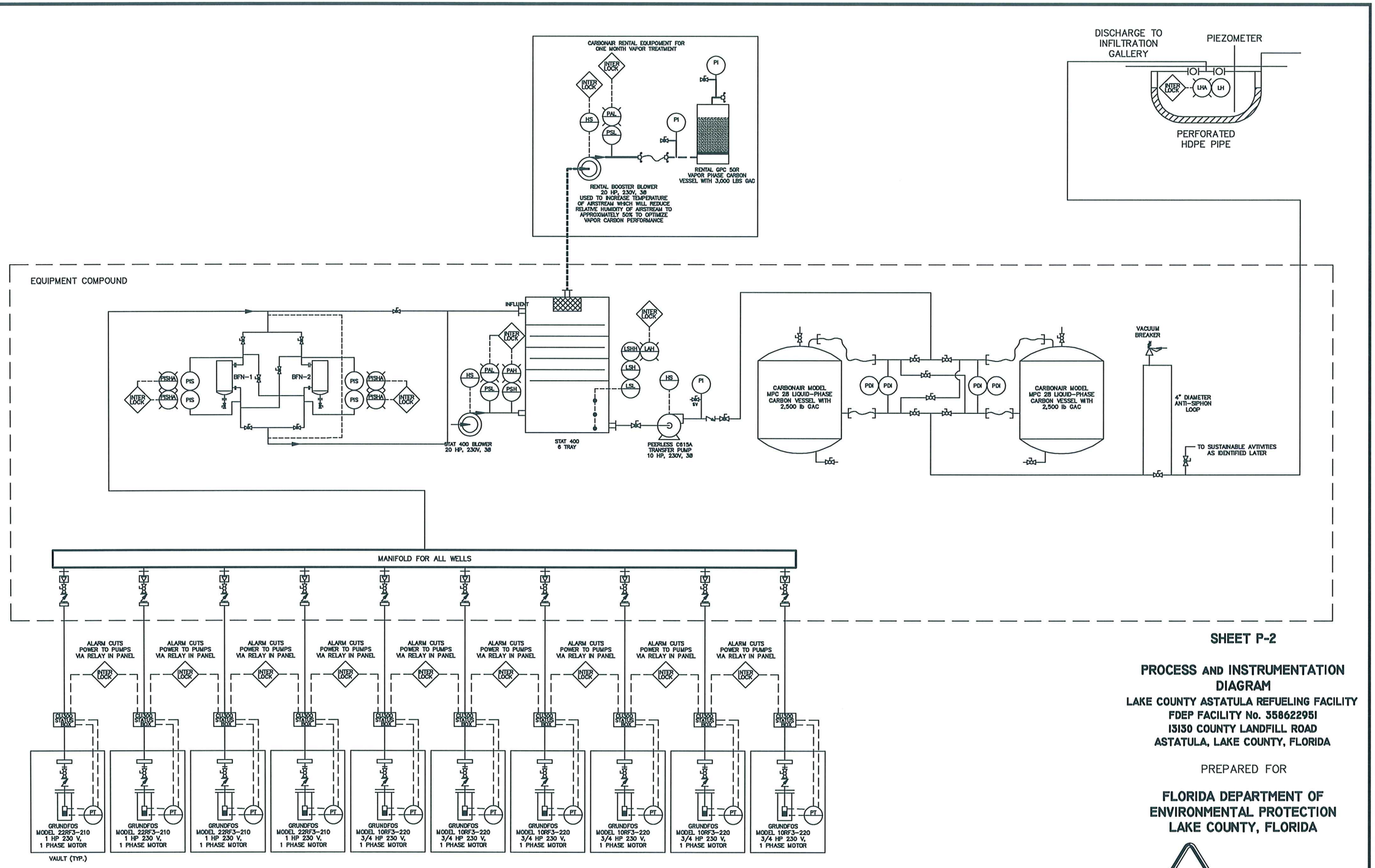

SHEET P-2

PROCESS AND INSTRUMENTATION DIAGRAM

LAKE COUNTY ASTATULA REFUELING FACILITY
FDEP FACILITY No. 358622951
13130 COUNTY LANDFILL ROAD
ASTATULA, LAKE COUNTY, FLORIDA

PREPARED FOR

FLORIDA DEPARTMENT OF ENVIRONMENTAL PROTECTION
LAKE COUNTY, FLORIDA

Shaw Shaw Environmental, Inc.

DRAWN BY	SDJF 5-21-10	CHECKED BY		DRAWING NUMBER	130385-B43
		APPROVED BY			