SINGLE FIXTURE MEN'S & WOMEN'S RESTROOM

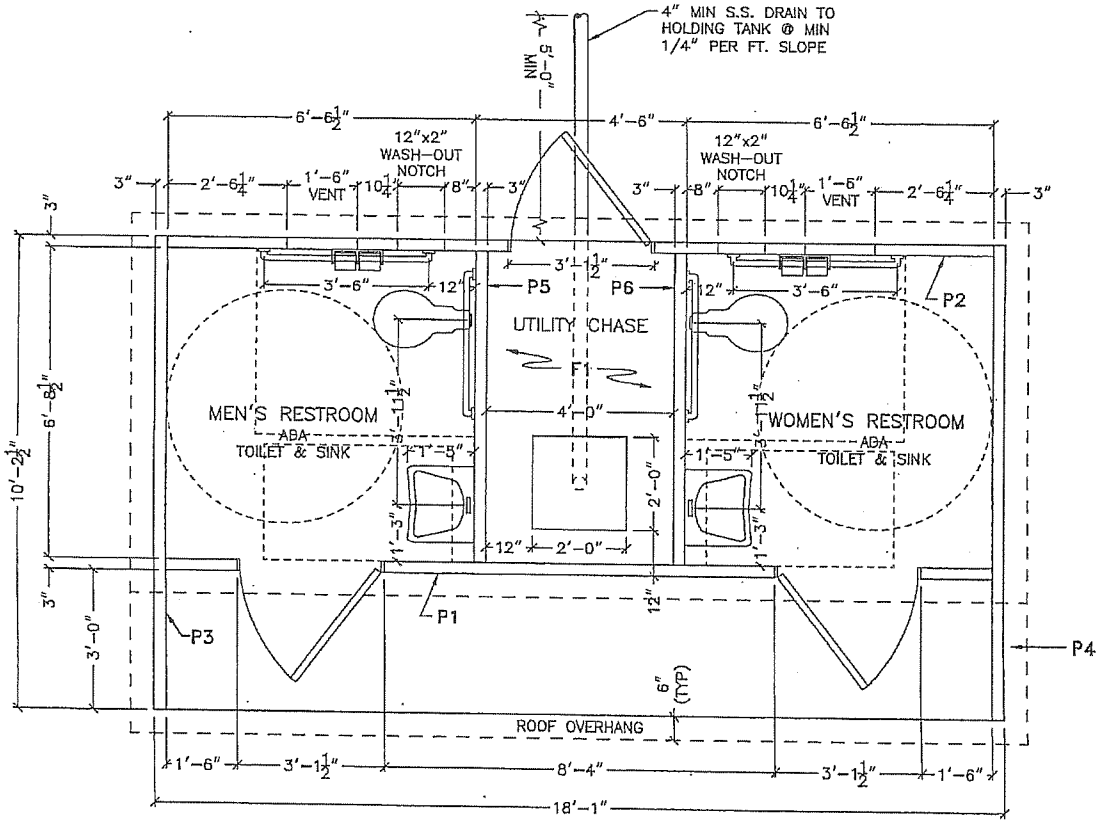

FLOOR PLAN
SCALE: 3/8"=1'-0"

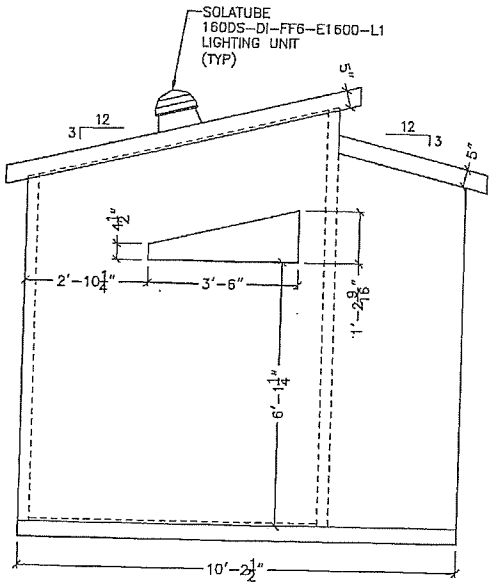

LEFT ELEVATION
SCALE: 3/8"=1'-0"

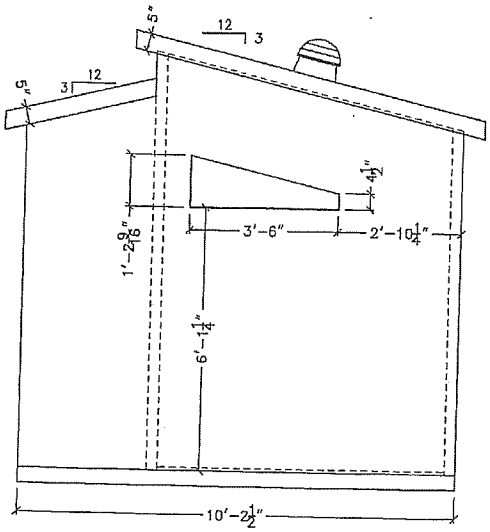

RIGHT ELEVATION
SCALE: 3/8"=1'-0"

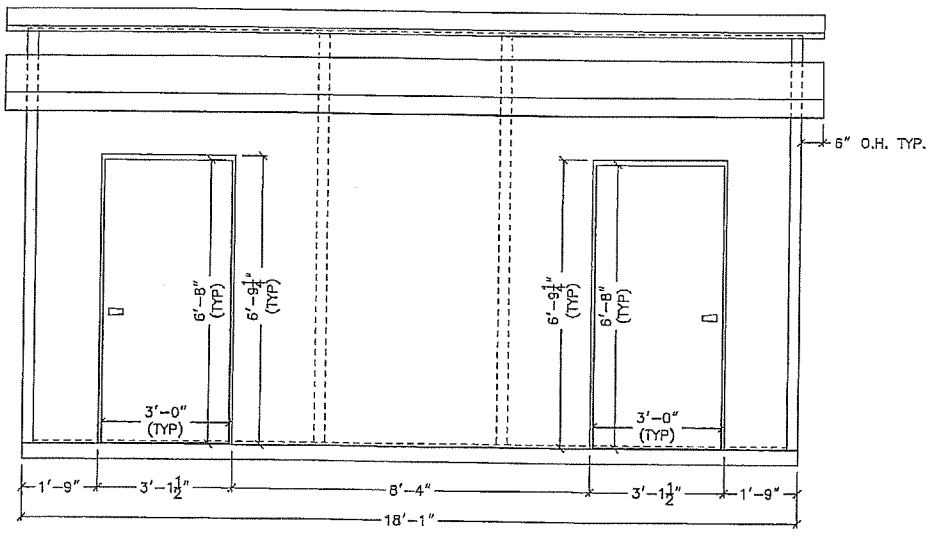

FRONT ELEVATION
SCALE: 3/8"=1'-0"

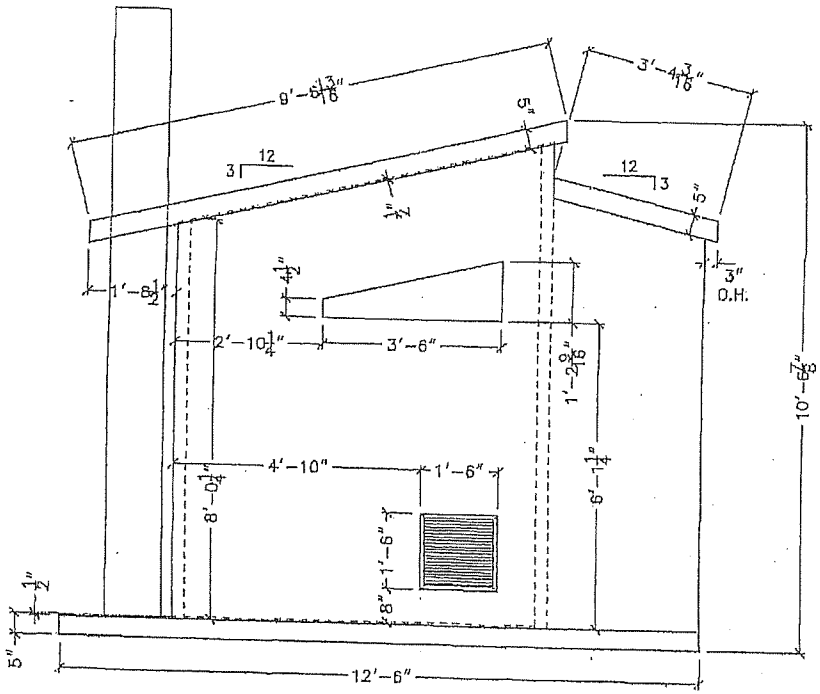

LEFT ELEVATION
SCALE: 3/8"=1'-0"

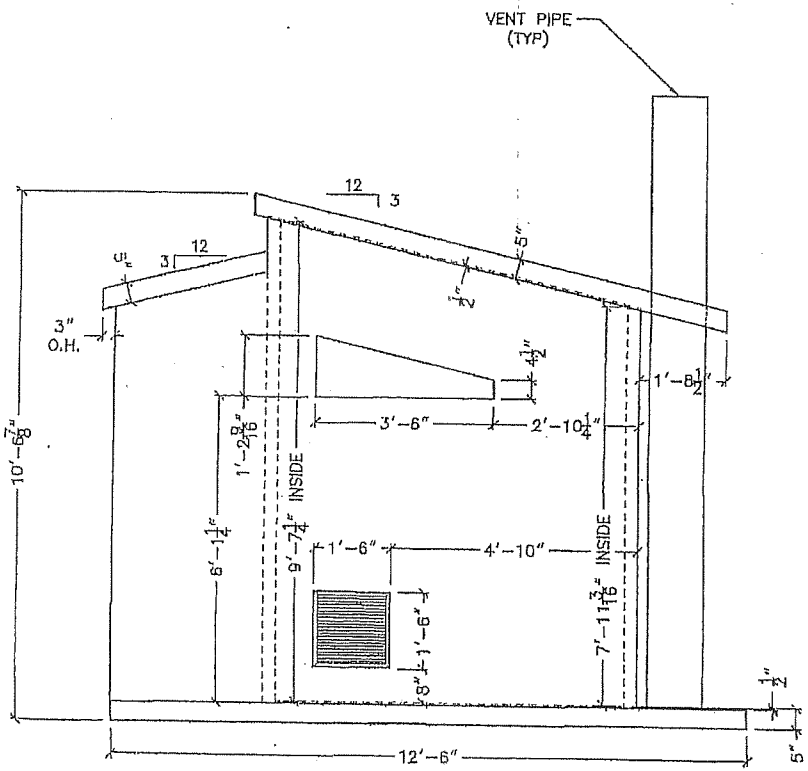

RIGHT ELEVATION
SCALE: 3/8"=1'-0"

APPROVED
MUR-1300
FL. DCA
HRH
INSPECTORS

10/26/08