NOTES:

1. THE ENTIRE KNOCKOUT POT SHALL BE PREFABRICATED BY THE MANUFACTURER.
2. CONTINUOUS WELD ALL EDGES OF GUSSETS AND FLATSTOCK.
3. THE COMPLETE KNOCKOUT POT WILL BE AIRTIGHT TO A VACUUM OF 100" WC. RESULTS OF TESTING MUST BE SUBMITTED.
4. THE STUDS, NUTS AND WASHERS FOR THE FLANGES SHALL BE STAINLESS STEEL.

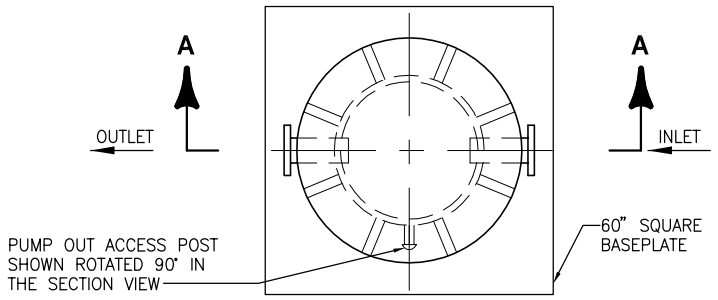

PLAN

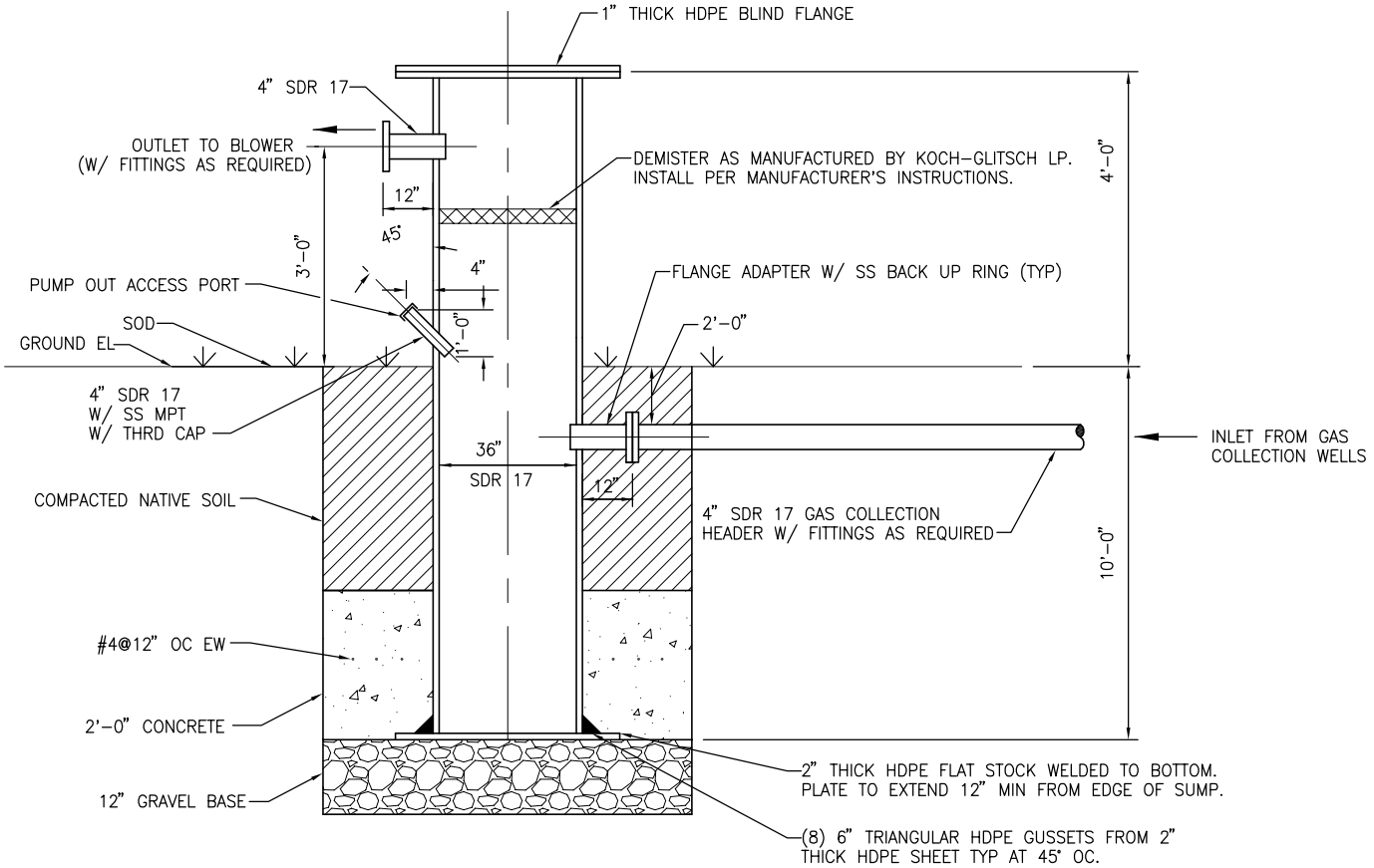

SECTION A-A

CONDENSATE KNOCKOUT POT DETAIL

NTS

LAKE COUNTY
LADY LAKE LANDFILL
GAS SYSTEM MODIFICATIONS

JONES EDMUNDS

LAST SAVED: 3/1/2010 5:33 PM BSCHNEIDER N:\12090 Lake County\025 Lady Lake LF Gas Mitigation\Permit Modification\Construction Figures\KO-Fig.dwg Plotted: 3/01/10 5:33pm BSchneider 12090-025-01