Pine Forest Park- 32530 S.R. 44, Deland, FL

1.01 SCOPE OF WORK: Provide all labor, materials, equipment, fuel and other incidental costs and supervision necessary for the installation of approximately 1100 FT of 5' high black vinyl coated 6 gauge schedule 40 chain link fencing (outfield & sidelines) at the Baseball field at Pine Forest Park. All work and equipment shall be in strict compliance with the latest codes, standards and practices.

Misc. Items to be noted:

- The Contractors installation when completed, shall match the existing 8' black vinyl coated chain link fence.
- All fencing is to be installed as shown on attached plan.
- Maintenance gate (12 FT wide double swing) to be installed as part of this RFQ

Fence details for 5 FT High Fencing:

5' High Black Vinyl Coated 6 gauge-schedule 40 chain link fence is required. Steel Chart for schedule of sizes of members is as follows:

- Height of fence- 5 FT
- Diameter of line posts- 2 "
- Post spacing Max- 6FT
- Corner & end post-2 1/2" diameter
- Top, Mid & Line Rail –1 5/8" diameter
- Depth of post into footing (line post & end / gate/ corner post) – 1'-8"
- Diagonal Braces – ½ "diameter
- Mesh to be placed on the outside of the fencing.
- Tie wire, #6 W & M gauge aluminum ties @ 15 o.c. for rails. Ties to be 12" apart on posts. End of ties should be wound in a telegraph, trust 2½ turns. Horizontal braces at corner & End posts 1 5/8 "

1.02 SUBMITTALS:

A. Submit product data/specification and shop drawings to Park and Trails Division for review and approval of all items of work.

B. All submittals to be approved by Parks and Trails Division prior to contractor delivering materials to site.

1.03 FIELD CONDITIONS: Verify and coordinate all work to field locations and dimensions.

1.04 PRODUCT HANDLING:

A. Deliver products to site in manufacturer's containers or packaging.

B. Store in secure and weather protected area.

C. Return all damaged products to manufacturer.

PART II – PRODUCTS

2.01 MATERIALS: Provide products as called for on the drawing and specified herein. See furnishing schedule and descriptions on drawings for specific products and Manufacturer's specs.

PART III – EXECUTION

3.01 WORKMANSHIP:

A. All furnishings described herein shall be installed by qualified tradesman. All installation work and materials to be per manufacturer's specifications, or as directed by the Owner's Representative.

B. All work and materials are subject to the approval of the County.

C. All products shall be inspected by the County for damage and chipped or marred finish. Contractor shall replace any damaged or rejected products at no conditional cost to the owner. The owner's representative may at his option authorize acceptance of chipped or scratched painted surfaces repaired by contractor at his own risk.

3.1 INSTALLATION

A. Install furnishing in locations as indicated on the plans and details. Assure that all furnishings are installed plumb and level and in accordance with the plans and details.

B. Install as per manufacturer's specifications

3.2 ACCEPTANCE

A. The County will review each installation to determine compliance with plans and specifications prior to final acceptance of the work.

B. Any work not installed in accordance with the plans and specifications and rejected by the County shall be removed and replaced at the Contractor's expense.

3.4 CLEANING

A. Perform cleaning during installation of the work and upon completion of the work. Remove from site all excess materials, soil, debris, and equipment.

LAKE COUNTY
FLORIDA
Pine Forest Park
Conceptual Plan A
48 Acres
Hiking Trail
Backstop - 60' infield
Little League - 225'
Baseball / Softball
Field - 300'
Football / Soccer
360' x 160'
Parking
Path

Work Area

BASEBALL

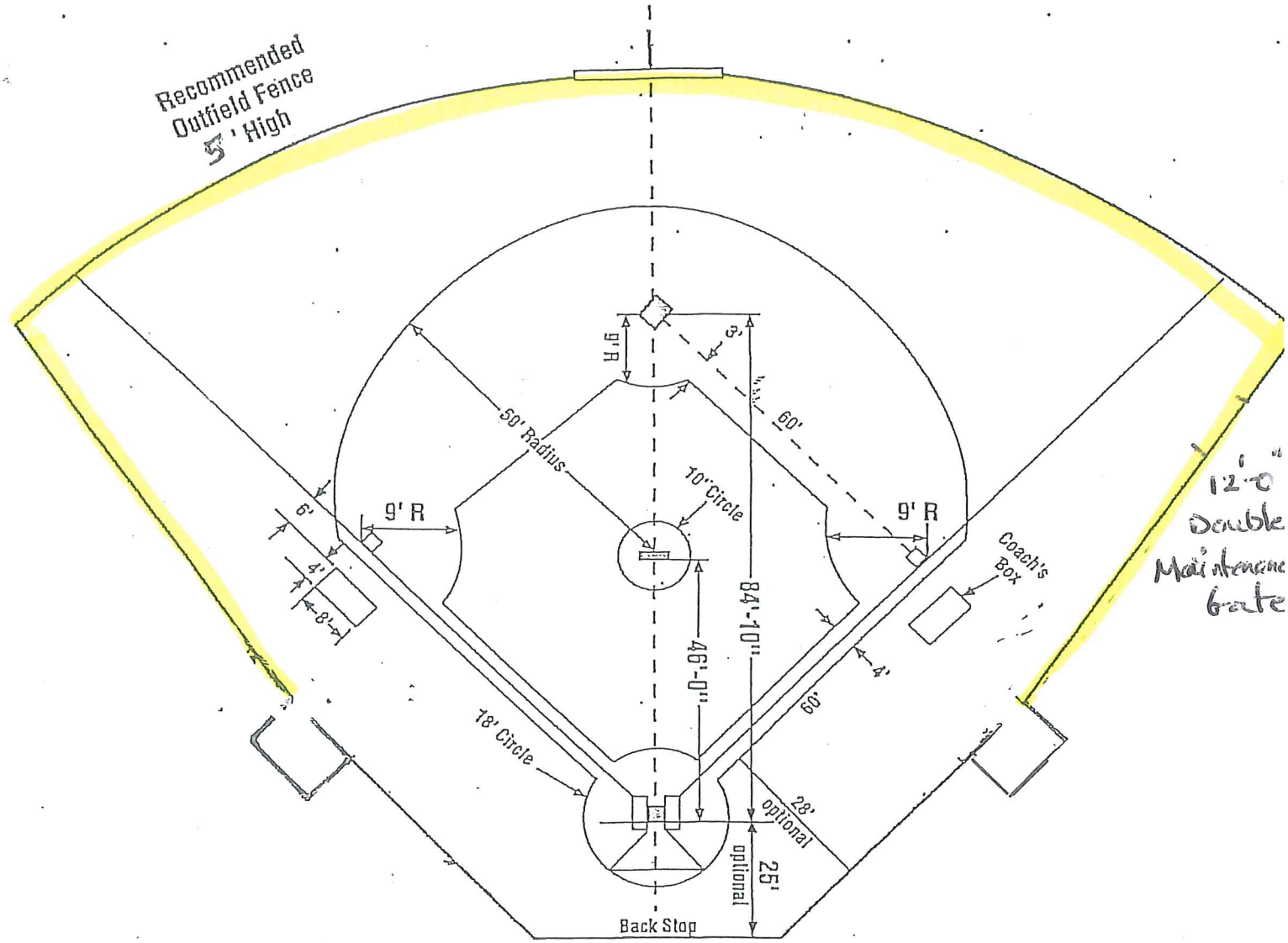
Recommended
Outfield Fence
5' High
9' H
3'
60'
50' Radius
10" Circle
9' R
9' R
6'
4'
8'
Coach's
Box
84'-10"
46'-0"
4'
60'
18' Circle
28'
optional
25'
optional
Back Stop
12'-0"
Double
Maintenance
Gate

FABRIC WIDTHS

HEIGHT OF FENCE	WIDTH OF BOTTOM FABRIC	WIDTH OF TOP FABRIC
3'-6" - 4'-0"	3'-6" - 4'-0"	0
6'-0"	6'-0"	0
8'-0"	8'-0"	0
10'-0"	10'-0"	0
12'-0"	8'-0"	4'-0"
14'-0"	10'-0"	4'-0"
16'-0"	10'-0"	6'-0"
18'-0"	10'-0"	8'-0"
20'-0"	10'-0"	10'-0"

PIPE SCHEDULE

NOMINAL OUTSIDE DIAMETER	ACTUAL OUTSIDE DIAMETER
1⅝"	1.660
2"	2.375
2½"	2.875
3"	3.500
3½"	4.000
4"	4.500
4½"	5.000

BOLT AND FABRIC NOTES

PEEN END OF ALL BOLTS.

BOLTS WHICH ARE INSTALLED 6' OR LESS ABOVE GRADE SHALL NOT PROTUDE MORE THAN ¼" BEYOND THE NUT AFTER TIGHTENING. ALL ROUGH EDGES SHALL BE FILED SMOOTH TO THE SATISFACTION OF THE ENGINEER.

ON FENCES OVER 12 FEET HIGH WHERE THE TWO WIDTHS OF FABRIC E REQUIRED, THE BOTTOM PIECE SHALL BE KNUCKLED TOP AND BOTTOM AND THE TOI PIECE KNUCKLED AT BOTTOM AND BARBED AT TOP.

THE TWO PIECES SHALL BE SPLICED IN SUCH A WAY AS TO GIVE A FINISHED NEAT APPEARANCE.

FABRIC TO BE KNUCKLED AT TOP AND BOTTOM RAILS ON FENCES UP TO AND INCLUDING 6'-0" HIGH AND BARBED AT TOP RAIL ON FENCES OVER 6'-0" HIGH.

SCHEDULE OF SIZES OF MEMBERS - AS PER ASTM A 53, ALL SIZES NPS

HEIGHT OF FENCE	DIAMETER OF LINE POSTS	POST SPACING MAXIMUM	CORNER & END POST	TOP RAIL	MID RAILS	BOTTOM RAIL	DEPTH OF POST INTO CURB AND FTG AT:		HORIZONTAL BRACES AT CORNER & END POST	DIAGONAL BRACES
							LINE POST	END/CORNER/ GATE POST		
3'-6" & 4'-0"	2"	6'-0"	2½"	1⅝"	0	1⅝"	1'-0"	1'-0"	0	0
6'-0"	2"	6'-0"	2½"	1⅝"	0	1⅝"	1'-8"	1'-8"	0	½" DIA.
8'-0"	2½"	8'-0"	3"	1⅝"	0	1⅝"	1'-8"	1'-8"	1 AT 1⅝"	½" DIA.
10'-0"	3"	10'-0"	4"	1⅝"	1 - 1⅝"	1⅝"	3'-2"	3'-2"	2 AT 1⅝"	½" DIA.
12'-0"	3"	10'-0"	4"	1⅝"	1 - 1⅝"	1⅝"	3'-2"	4'-2"	2 AT 1⅝"	½" DIA.
14'-0"	3½"	10'-0"	4"	1⅝"	2 - 1⅝"	1⅝"	3'-2"	4'-2"	2 AT 1⅝"	½" DIA.
16'-0"	3½"	10'-0"	4"	1⅝"	2 - 1⅝"	1⅝"	3'-2"	4'-2"	2 AT 1⅝"	½" DIA.
18'-0"	3½"	10'-0"	4"	1⅝"	2 - 1⅝"	1⅝"	3'-2"	4'-2"	2 AT 1⅝"	½" DIA.
20'-0"	4½"	10'-0"	4½"	1⅝"	3 - 1⅝"	1⅝"	4'-2"	4'-6"	3 AT 1⅝"	½" DIA.

WIRE FABRIC NOTES

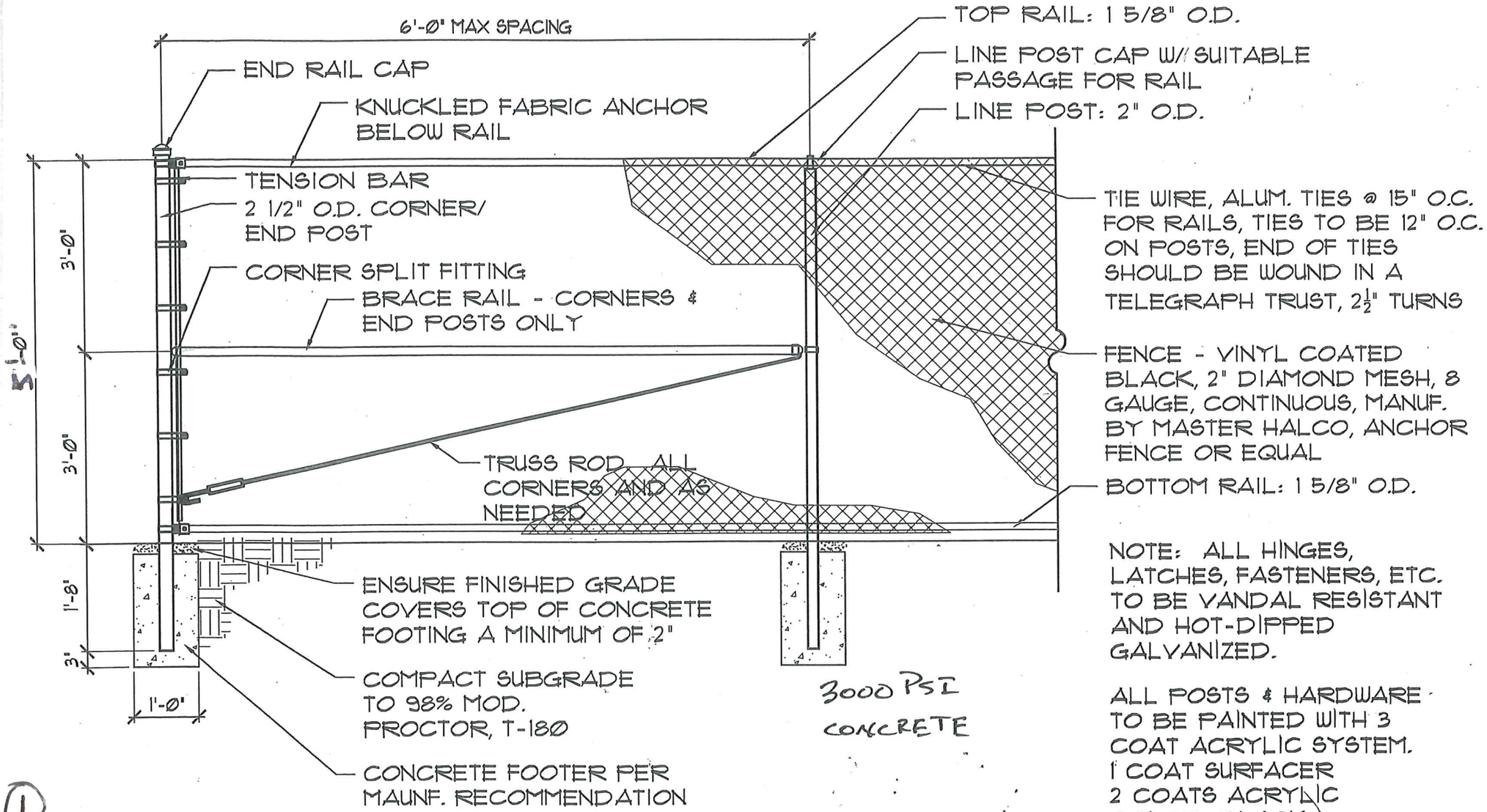

1

CHAINLINK FENCE DETAIL

2 CORNER FITTING

SCALE: HALF SCALE

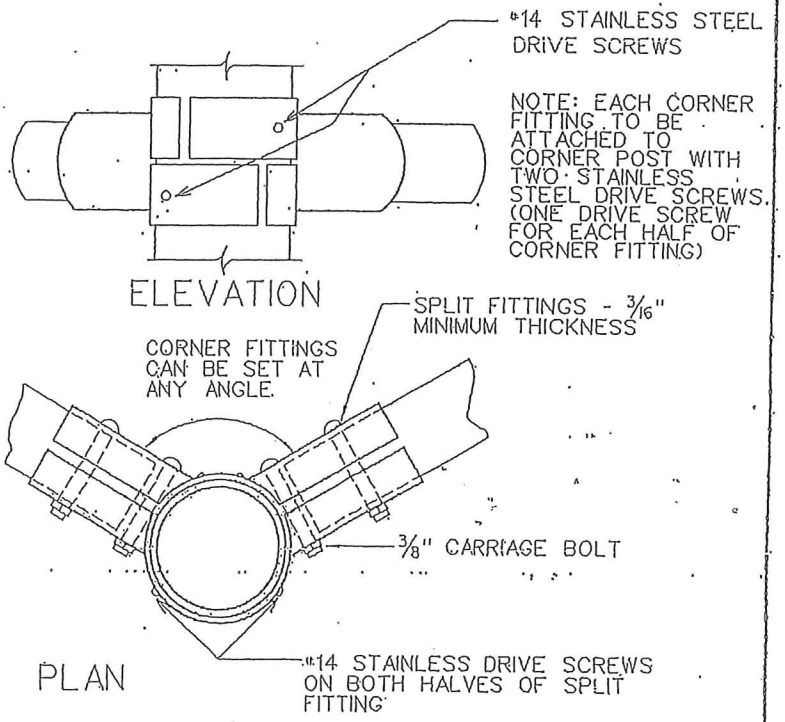

3 BOULEVARD
SCALE: HALF SCALE

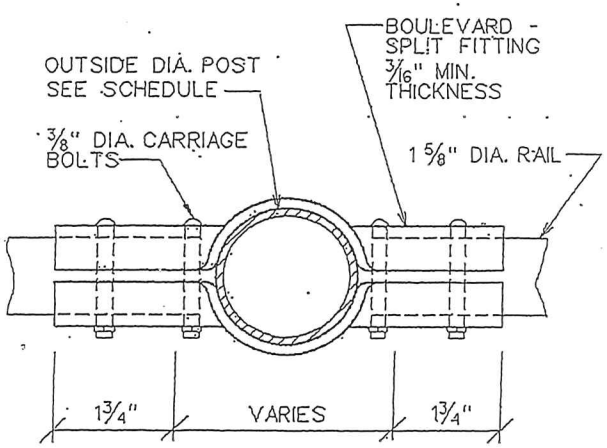

PLAN

ALL CORNERS TO BE ROUNDED

NOTE:

A=1 3/4" FOR 2" - 4 1/2" O.D. POST

B=1 5/8" FOR 2" O.D. OR SMALLER POST

C=2 1/2" NOM. O.D. OR LARGER - 2 BOLTS REQUIRED

4 END FITTING
SCALE: HALF SCALE

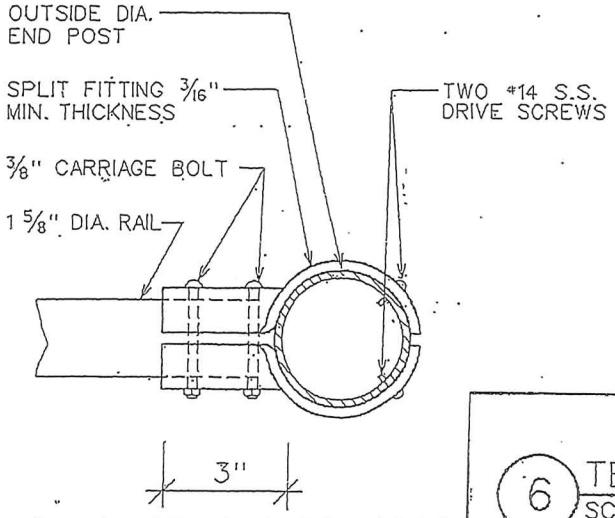

PLAN

NOTE: MINIMUM WIDTH OF END FITTING TO BE 2 1/4"

5 TOP RAIL COUPLING
SCALE: HALF SCALE

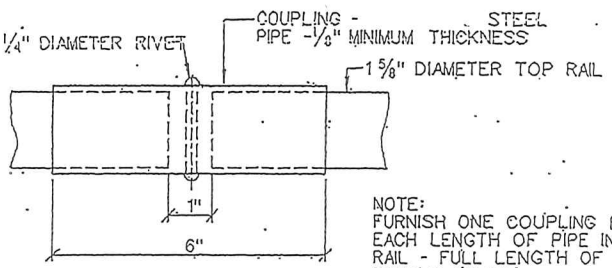

ELEVATION

NOTE:
FURNISH ONE COUPLING FOR EACH LENGTH OF PIPE IN TOP RAIL - FULL LENGTH OF PIPE EQUALS 21'-0"

6 TENSION MEMBERS
SCALE: HALF SCALE

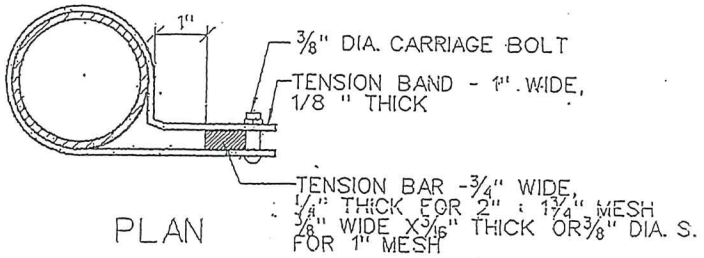

PLAN

7 CORNER SPLIT FITTING
SCALE: 3"=1'-0"

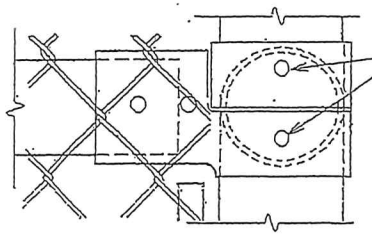

ELEVATION

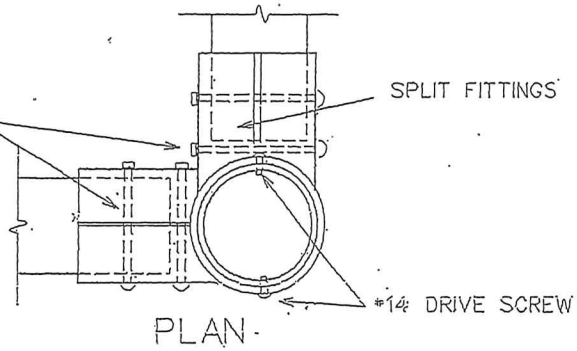

PLAN

8 SMALL POST CAP

SCALE: FULL SCALE

WALL THICKNESS 3/16" THROUGHOUT

NOTE: POST CAP IS TO BE OF MALLEABLE IRON OR PRESSED STEEL.

CAP TOP FOR 3'-6" AND 4'-0" HIGH FENCE TO BE A SMOOTH "DOME" SHAPE. FOR 6'-0" HIGH FENCES, POST CAPS CAN BE "DOME" OR "BULLET" SHAPED.

POST CAP IS TO FIT SNUGLY OVER POST AND IS TO BE FIXED IN PLACE WITH TWO # 14 STAINLESS STEEL DRIVE OR SET SCREWS.

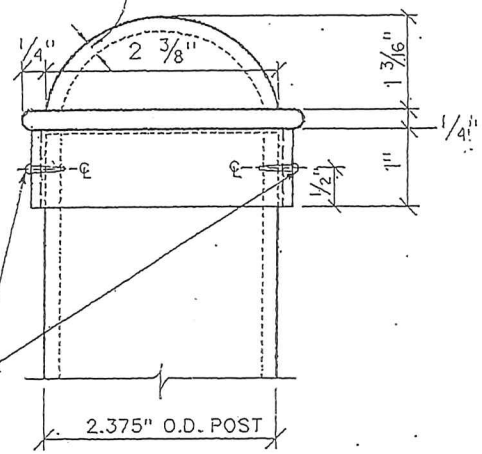

9 END, CORNER, & GATE POST CAP

SCALE: FULL SCALE

WALL THICKNESS 3/16" THROUGHOUT

NOTE: POST CAP IS TO BE OF MALLEABLE IRON.

FOR 4" OUTSIDE DIAMETER POST, POST CAP SHALL POSSESS DIMENSIONS THAT ARE IN PROPORTION TO DIMENSIONS BELOW FOR 2 1/8" OUTSIDE DIAMETER POST CAP.

CAP TOPS FOR 3" OUTSIDE DIA. AND 4" OUTSIDE DIA. POSTS ARE TO POSSESS A SMOOTH "BULLET" SHAPE. FOR 2 1/2" OUTSIDE DIA. POST CAP - SEE DETAIL 9

POST CAP IS TO FIT SNUGLY OVER POST AND IS TO BE FIXED IN PLACE WITH TWO # 14 STAINLESS STEEL DRIVE OR SET SCREWS.

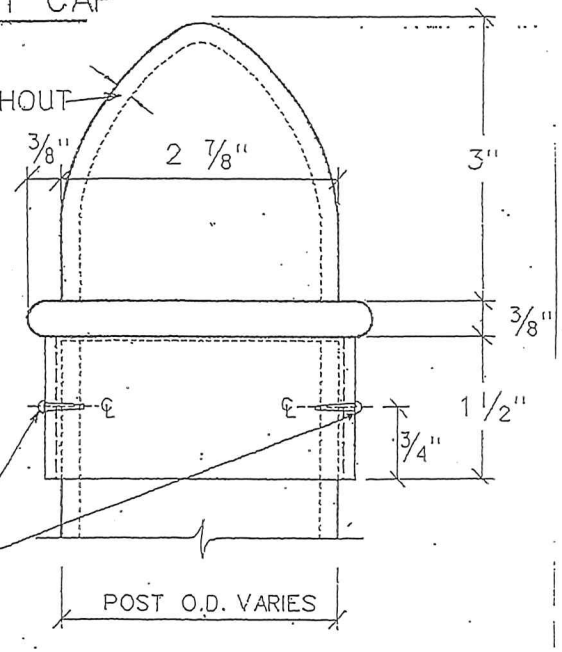

10 POST LINE TOP

SCALE: FULL SCALE

NOTE: WIDTH OF LINE TOP OVAL TO BE MINIMUM OF 5/8" AND A MAXIMUM OF 7/8". LINE TOP IS TO BE OF MALLEABLE IRON.

INSIDE OF LINE TOP OVAL IS TO BE ALIGNED WITH OUTSIDE WALL OF LINE POST. CHAIN LINK MESH MUST BE STRAIGHT FROM LINE POST TO TOP RAIL.

WALL THICKNESS TO BE 3/16" THROUGHOUT

1 5/8" DIA. TOP RAIL

POST CAP IS TO FIT SNUGLY OVER POST AND IS TO BE FIXED IN PLACE WITH TWO # 14 STAINLESS STEEL DRIVE OR SET SCREWS.

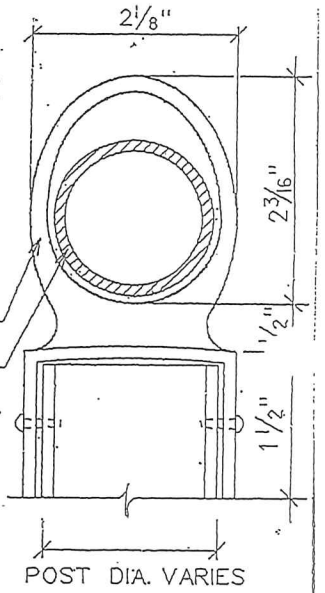

FILE NAME: fence-DD-nts

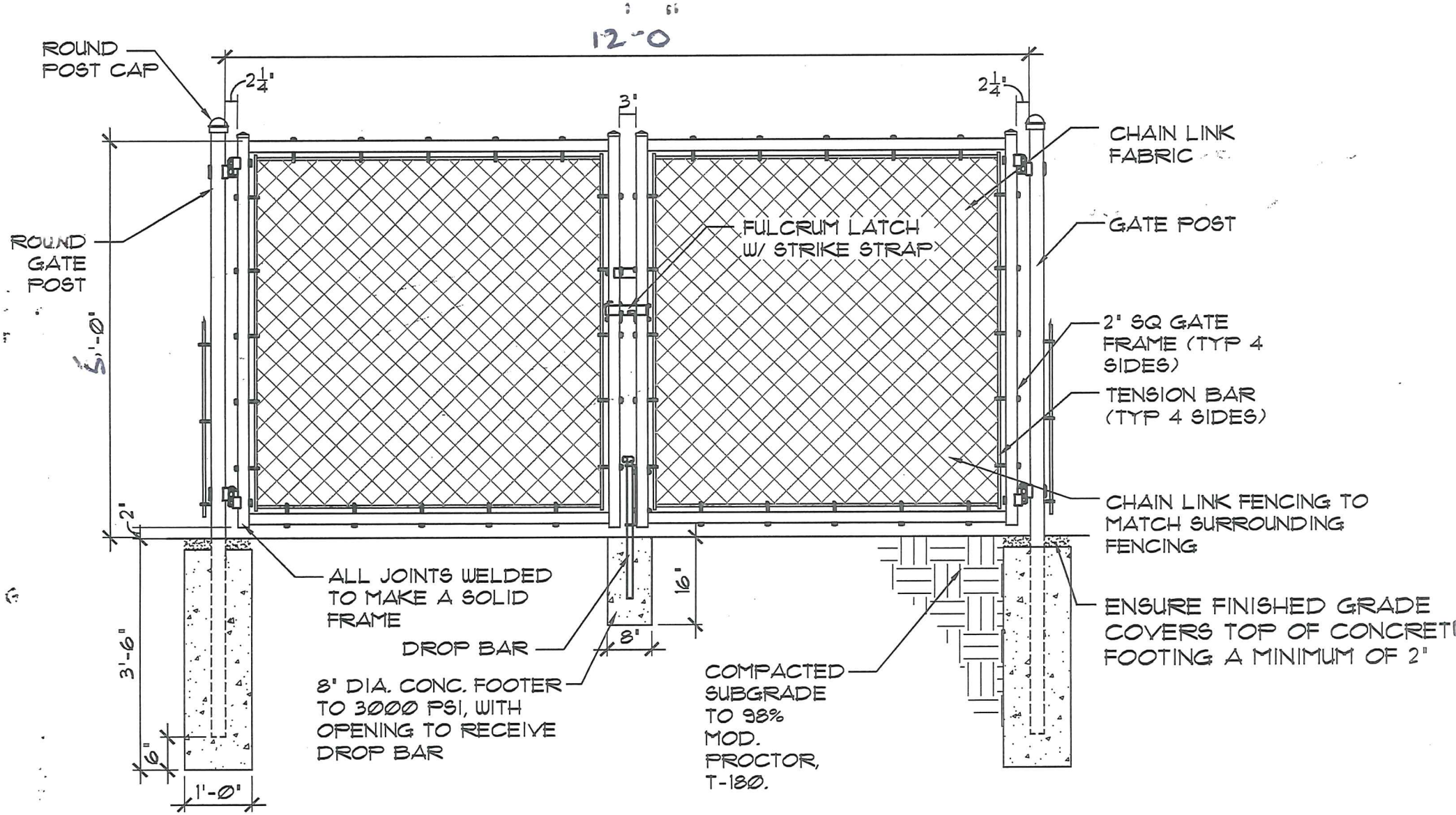

3
SD-5

CHAIN LINK GATE DETAIL

1/2" = 1'-0"

FILE NAME: fence gate

4
SD-5