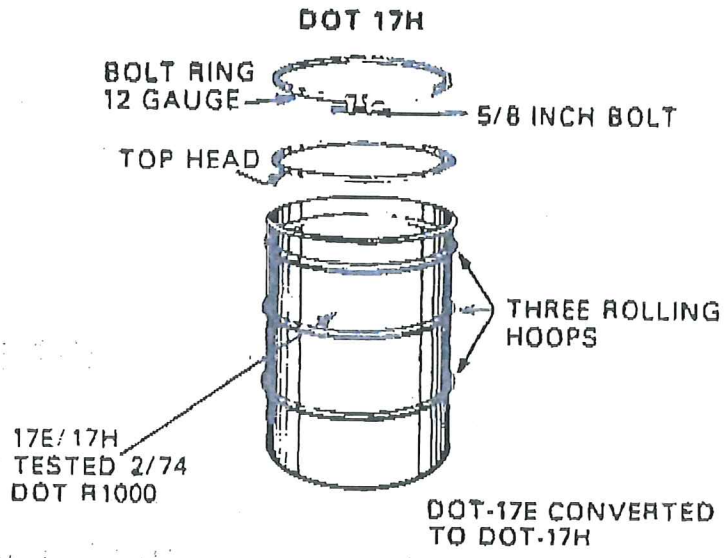RECONDITIONED DOT SPECIFICATIONS: 17H DRUMS