Concrete Wheel Stops for Various Lake County Parks

1.01 SCOPE OF WORK: Provide all labor, materials, equipment, fuel and other incidental costs and supervision necessary for the furnishing and delivery of 200 (Two hundred)concrete wheel stops for various Lake County Parks. All work and equipment shall be in strict compliance with the latest codes, standards and practices.

Misc. Items to be noted:

- See attached drawings for details
- 6 FT Long X 9 INCH Wide X 5 INCH High concrete wheel stops
- Rebar in detail not part of this bid (NIC)
- No installation required

1.02 SUBMITTALS:

A. Submit product data/specification and shop drawings to Park and Trails Division for review and approval of all items of work.

B. All submittals to be approved by Parks and Trails Division prior to contractor delivering materials to site.

1.03 FIELD CONDITIONS: Verify and coordinate all work to field locations and dimensions.

1.04 PRODUCT HANDLING:

A. Deliver products to site in manufacturer's containers or packaging.

B. Store in secure area.

C. Return all damaged products to manufacturer.

PART III – EXECUTION

3.01 WORKMANSHIP:

A. All materials are subject to the approval of the County.

B. All products shall be inspected by the County for damage and chipped or marred finish. Contractor shall replace any damaged or rejected products at

no conditional cost to the owner. The owner's representative may at his option authorize acceptance of chipped or scratched painted surfaces repaired by contractor at his own risk

Note: Sample only not painted

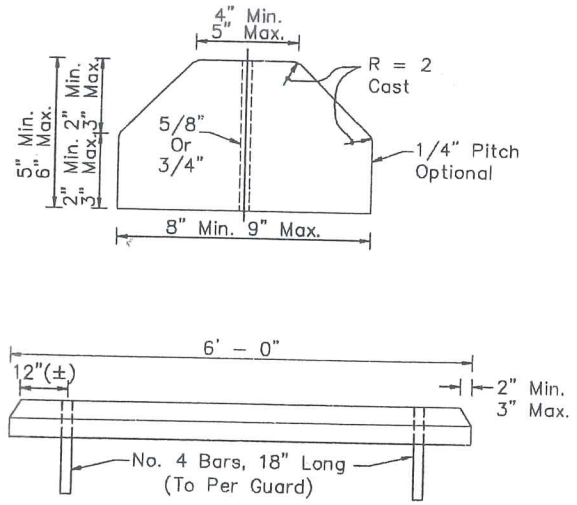

CONCRETE WHEEL STOP

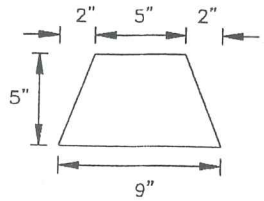

CONCRETE CURB
(NOT TO SCALE)