East Lake Community Park- 24809 Wallick Road, Sorrento

1.01 SCOPE OF WORK: Provide all labor, materials, equipment, fuel and other incidental costs and supervision necessary to furnish & install 230 FT of 14 FT high black schedule 40 vinyl coated chain link fencing and two (2) black schedule 40 vinyl coated chain link gates (4 FT wide X 7 FT high) to match. All work and equipment shall be in strict compliance with the latest codes, standards and practices.

Misc. Items to be noted:

- Field verification by Contractor is recommended
- The Contractors installation, when completed, shall match the existing 14FT Black vinyl coated chain link fence.
- The existing galvanized perimeter fencing on wooden to remain.
- The new 14FT high fence to be installed behind the existing and temporary fence at the final location designated by Parks staff.
- All fencing is to be installed as shown on attached plan.

Fence details for 14 FT High Fencing:

Steel Chart for schedule of sizes of members is as follows:

Height of fence- 14 FT
Diameter of line posts- 3 ½ INCHES
Post spacing Max- 10 FT
Corner & End post-4 INCH diameter
Top Rail- 1 5/8 INCH diameter
Upper & Lower Mid Rail- 2 5/8 INCH diameter
Bottom Rail- 1 5/8 INCH diameter
Depth of post into curb & footing (line post & end / gate/ corner post)- 3' 2"
Horizontal Braces at corner & end posts- 2 @ 1 5/8 INCH
Diagonal Braces – ½ INCH diameter
Tie wire, #6 W & M gauge aluminum ties @ 15 INCH o.c. for rails
Ties to be 12 INCH apart on posts. End of ties should be wound in a telegraph trust, 2 ½ turns.

Note: Mesh to be placed on the inside of the Park. All hardware shall be painted black & all bolts shall be cut back with less than 3 threads exposed. Trimming, Pruning & Proper disposal of debris part of this bid.

1.02 SUBMITTALS:

A. Submit product data/specification and shop drawings to Park and Trails Division for review and approval of all items of work.

FIELD CONDITIONS: Verify and coordinate all work to field locations and dimensions.

PART III – EXECUTION

3.01 WORKMANSHIP:

A. All furnishings described herein shall be installed by qualified tradesman. All installation work and materials to be per manufacturer's specifications, or as directed by the Owner's Representative.

B. All products shall be inspected by the County for damage and chipped or marred finish. Contractor shall replace any damaged or rejected products at no conditional cost to the owner. The owner's representative may at his option authorize acceptance of chipped or scratched painted surfaces repaired by contractor at his own risk.

3.3 CLEANING

A. Perform cleaning during installation of the work and upon completion of the work. Remove from site all excess materials, soil, debris, and equipment.

(1)

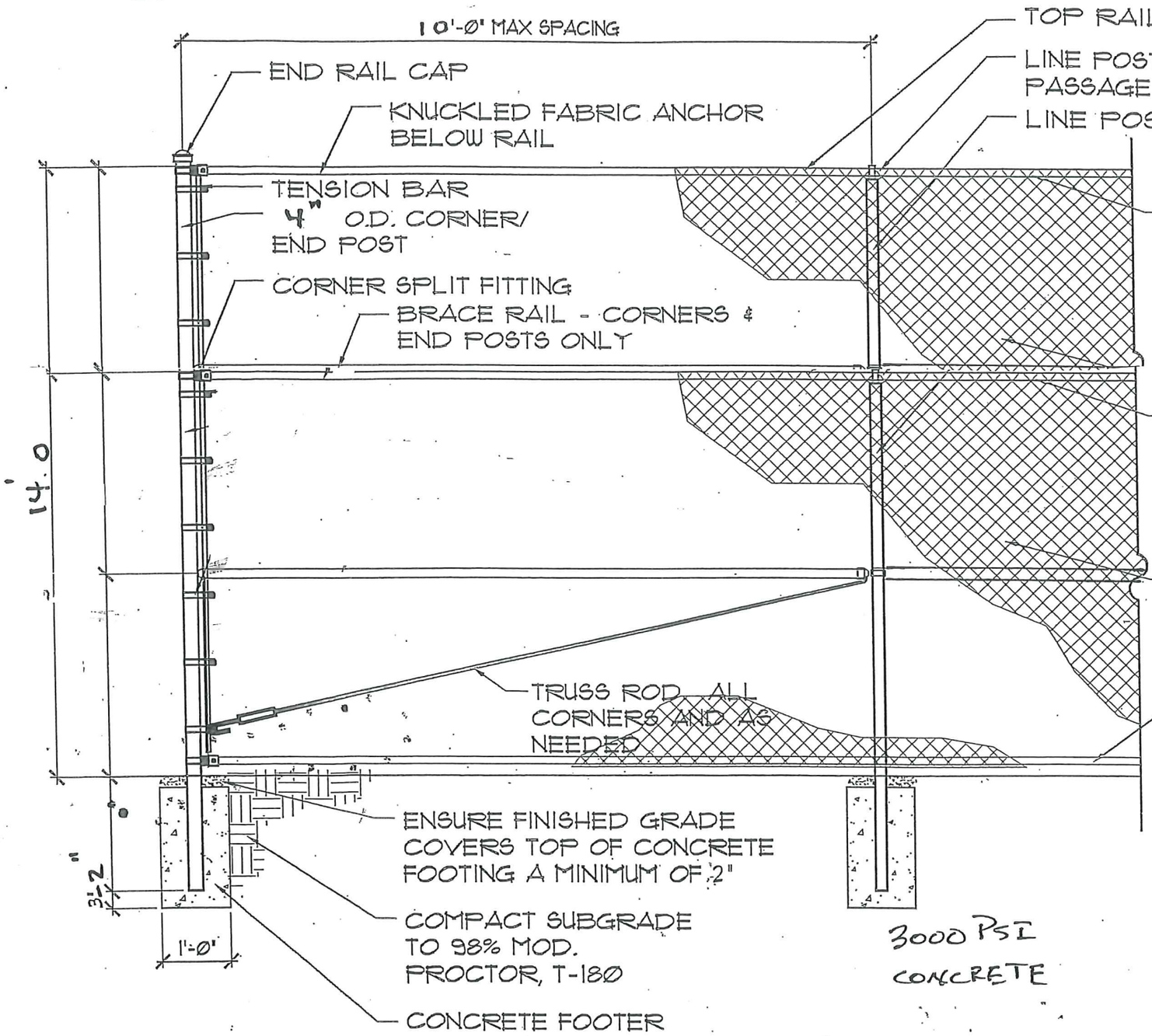

TOP RAIL: 1 5/8" O.D.

LINE POST CAP W/ SUITABLE PASSAGE FOR RAIL

LINE POST: 3½" O.D.

TIE WIRE, ALUM. TIES @ 15" O.C. FOR RAILS, TIES TO BE 12" O.C. ON POSTS, END OF TIES SHOULD BE WOUND IN A TELEGRAPH TRUST, 2½" TURNS

UPPER & MID RAILS 2 5/8" O.D.

FENCE - VINYL COATED BLACK, 2" DIAMOND MESH, 8 GAUGE, CONTINUOUS, MANUF. BY MASTER HALCO, ANCHOR FENCE OR EQUAL

BOTTOM RAIL: 1 5/8" O.D.

NOTE: ALL HINGES, LATCHES, FASTENERS, ETC. TO BE VANDAL RESISTANT AND BLACK VINYL CHAIN LINK.

ALL POSTS & HARDWARE TO BE PAINTED WITH 3 COAT ACRYLIC SYSTEM.
1 COAT SURFACER
2 COATS ACRYLIC
COLOR: BLACK

1 CHAINLINK FENCE DETAIL

2 CORNER FITTING
SCALE: HALF SCALE

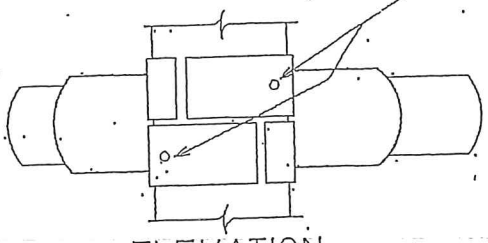

ELEVATION

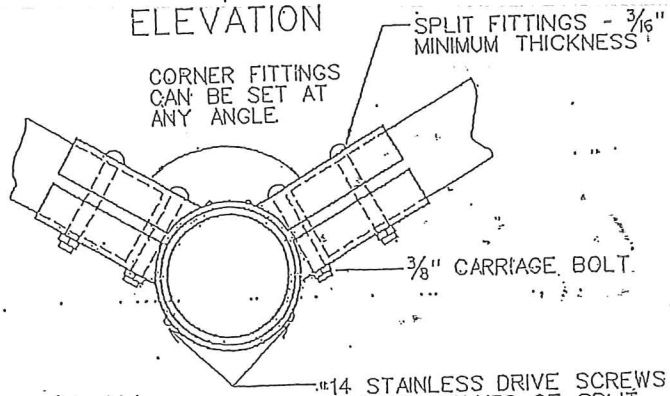

PLAN

3 BOULEVARD
SCALE: HALF SCALE

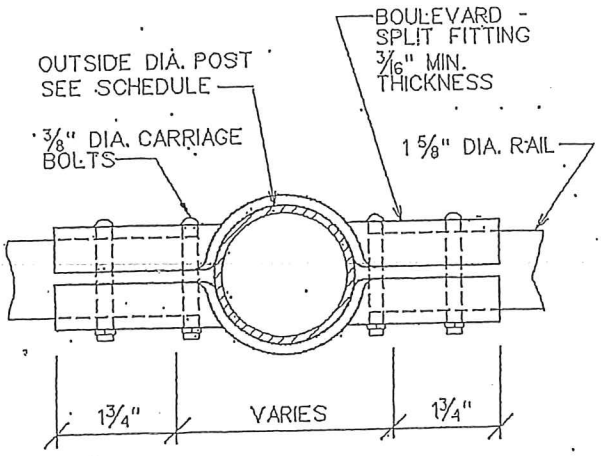

PLAN

ALL CORNERS TO BE ROUNDED

NOTE:
A=1 3/4" FOR 2" - 4 1/2" O.D. POST
B=1 5/8" FOR 2" O.D. OR SMALLER POST
C=2 1/2" NOM. O.D. OR LARGER - 2 BOLTS REQUIRED

4 END FITTING
SCALE: HALF SCALE

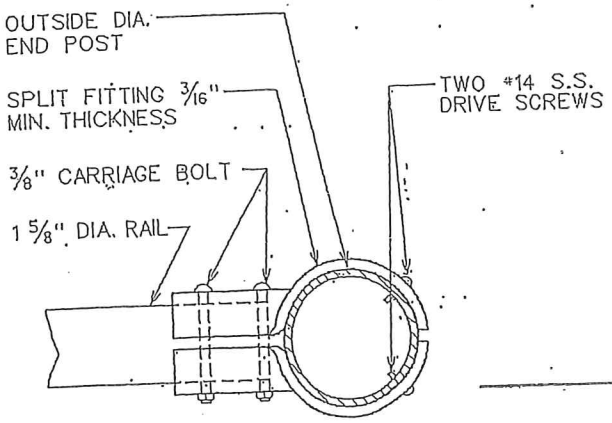

PLAN

NOTE: MINIMUM WIDTH OF END FITTING TO BE 2 1/4"

5 TOP RAIL COUPLING
SCALE: HALF SCALE

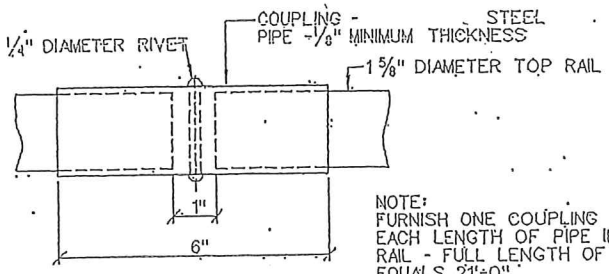

ELEVATION

NOTE:
FURNISH ONE COUPLING FOR EACH LENGTH OF PIPE IN TOP RAIL - FULL LENGTH OF PIPE EQUALS 21'-0"

6 TENSION MEMBERS
SCALE: HALF SCALE

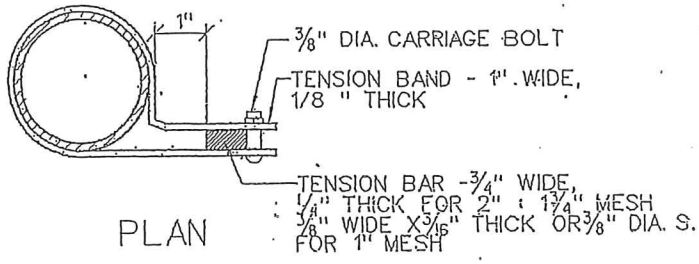

PLAN

7 CORNER SPLIT FITTING

SCALE: 3"=1'-0"

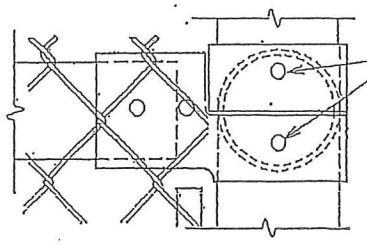

ELEVATION

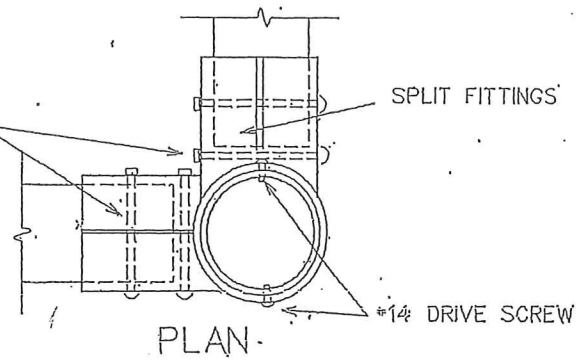

PLAN

8 SMALL POST CAP

SCALE: FULL SCALE

WALL THICKNESS 3/16" THROUGHOUT

NOTE: POST CAP IS TO BE OF MALLEABLE IRON OR PRESSED STEEL.

CAP TOP FOR 3'-6" AND 4'-0" HIGH FENCE TO BE A SMOOTH "DOME" SHAPE. FOR 6'-0" HIGH FENCES, POST CAPS CAN BE "DOME" OR "BULLET" SHAPED.

POST CAP IS TO FIT SNUGLY OVER POST AND IS TO BE FIXED IN PLACE WITH TWO #14 STAINLESS STEEL DRIVE OR SET SCREWS.

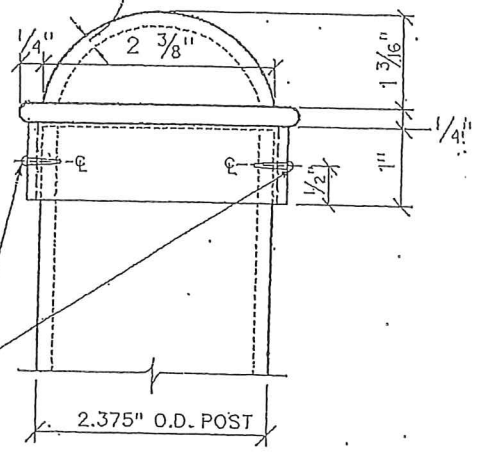

9 END, CORNER, & GATE POST CAP

SCALE: FULL SCALE

WALL THICKNESS 3/16" THROUGHOUT

NOTE: POST CAP IS TO BE OF MALLEABLE IRON.

FOR 4" OUTSIDE DIAMETER POST, POST CAP SHALL POSSESS DIMENSIONS THAT ARE IN PROPORTION TO DIMENSIONS BELOW FOR 2 1/8" OUTSIDE DIAMETER POST CAP.

CAP TOPS FOR 3" OUTSIDE DIA. AND 4" OUTSIDE DIA. POSTS ARE TO POSSESS A SMOOTH "BULLET" SHAPE. FOR 2 1/2" OUTSIDE DIA. POST CAP - SEE DETAIL 9

POST CAP IS TO FIT SNUGLY OVER POST AND IS TO BE FIXED IN PLACE WITH TWO #14 STAINLESS STEEL DRIVE OR SET SCREWS.

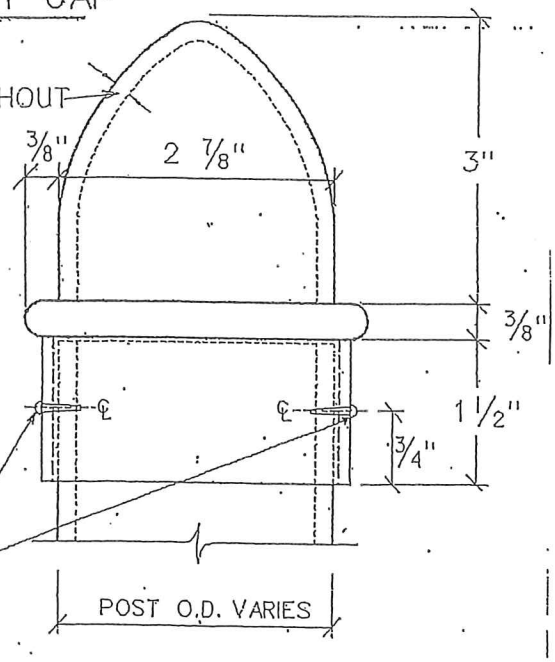

10 POST LINE TOP

SCALE: FULL SCALE

NOTE: WIDTH OF LINE TOP OVAL TO BE MINIMUM OF 5/8" AND A MAXIMUM OF 7/8". LINE TOP IS TO BE OF MALLEABLE IRON.

INSIDE OF LINE TOP OVAL IS TO BE ALIGNED WITH OUTSIDE 'WALL' OF LINE POST. CHAIN LINK MESH MUST BE STRAIGHT FROM LINE POST TO TOP RAIL.

WALL THICKNESS TO BE 3/16" THROUGHOUT

1 5/8" DIA. TOP RAIL

POST CAP IS TO FIT SNUGLY OVER POST AND IS TO BE FIXED IN PLACE WITH TWO # 14 STAINLESS STEEL DRIVE OR SET SCREWS.

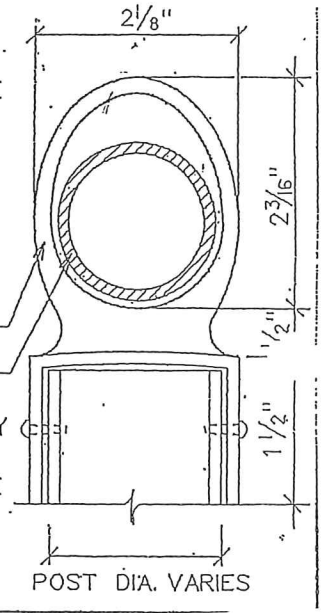

4FT X 7FT

SINGLE FENCE GATE

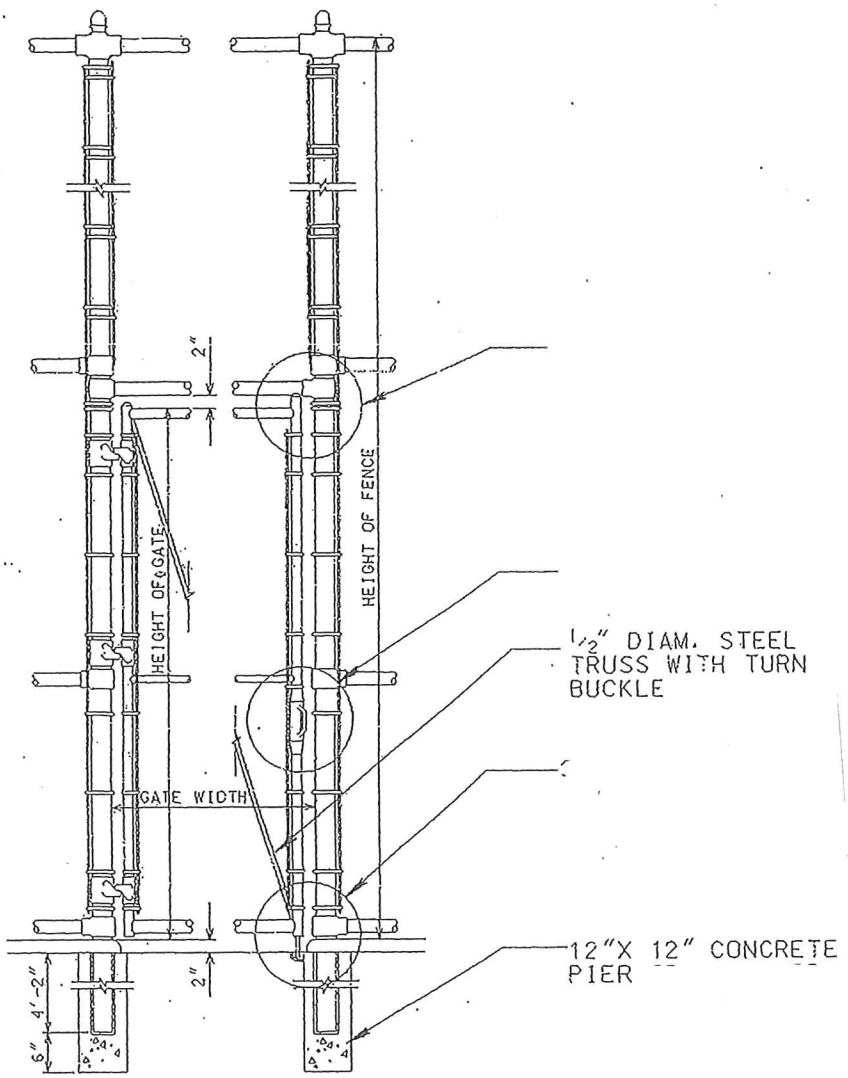

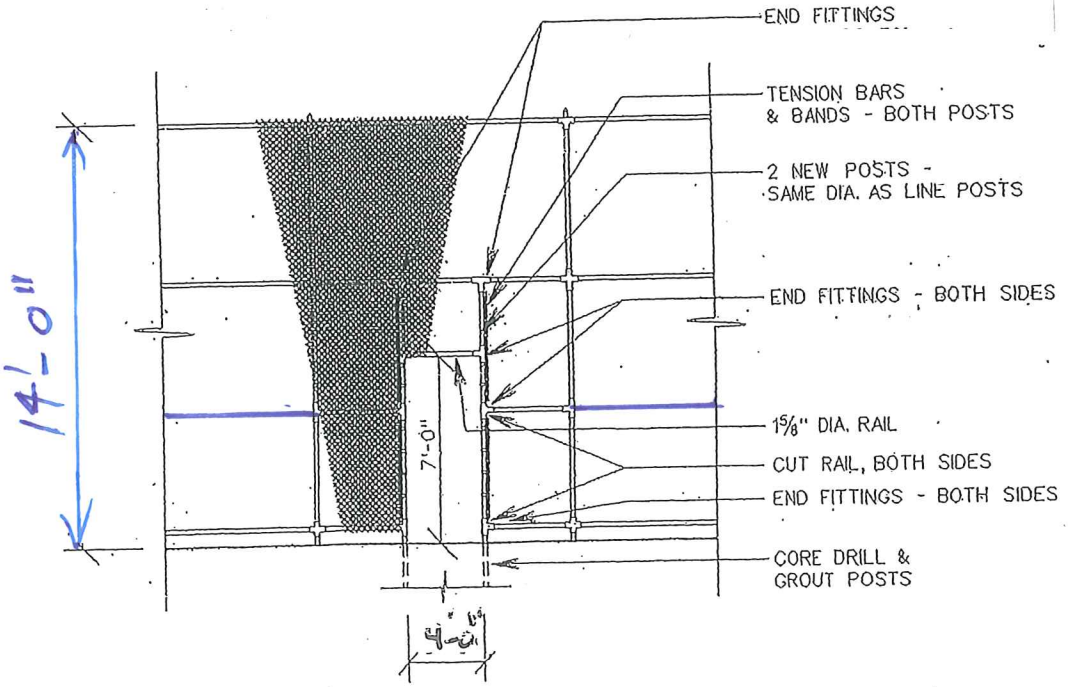

SCHEDULE OF MEMBER SIZES

PIPE POSTS & RAILS SHALL BE TYPE I OR TYPE II

TYPE I: ROUND MEMBERS SHALL BE BLACK VINYL GALVANIZED CONFORMING WITH ASTM-A-53 STANDARD WEIGHT SCHEDULE 40

TYPE II: ROUND MEMBERS SHALL BE MANUFACTURED FROM STEEL CONFORMING TO ASTM-A569 COLD ROLLED WELDED. HAVE A TENSILE STRENGTH OF 50,000 P.S.I. AND BE GIVEN CORROSION PROTECTION AS PER SPECIFICATIONS FOR SS-40 PIPE.

HEIGHT OF FENCE	DIAMETER OF LINE POSTS	POST SPACING MAXIMUM	END & GATE POST	HORIZ BRACE AT GATE POST	SIZE OF GATE MEMBERS	HORIZ BRACE ON GATES	SINGLE GATE HEIGHT	SINGLE GATE WIDTH	DIAG. TRUSS ON GATE	DIAG. TRUSS-FENCE PANELS	PORTAL	HEAD RAIL	DEPTH OF POST FOOTING
3'-6"	2"	6'-0"	3"	0	2"	0	3'-6"	4'-0"	1/2" DIAM.	0	NO	0	1'-6"
4'-0"	2"	6'-0"	3"	0	2"	0	4'-0"	4'-0"	1/2" DIAM.	0	NO	0	1'-6"
6'-0"	2"	6'-0"	3"	0	2"	0	6'-0"	4'-0"	1/2" DIAM.	1/2" DIAM.	NO	0	2'-0"
8'-0"	2 1/2"	8'-0"	3"	(1) - 1 5/8"	2"	1 5/8"	7'-7"	4'-0"	1/2" DIAM.	1/2" DIAM.	NO	0	2'-0"
10'-0"	3"	10'-0"	4"	(2) - 1 5/8"	2"	1 5/8"	7'-7"	4'-0"	1/2" DIAM.	1/2" DIAM.	YES	3"	3'-2"
12'-0"	3"	10'-0"	4"	(2) - 1 5/8"	2"	1 5/8"	7'-7"	4'-0"	1/2" DIAM.	1/2" DIAM.	YES	3"	4'-2"
14',16',18',& 20'	3 1/2"	10'-0"	4"	(2) - 1 5/8"	2"	1 5/8"	7'-7"	4'-0"	1/2" DIAM.	1/2" DIAM.	YES	3"	4'-2"

East Lake Community Park

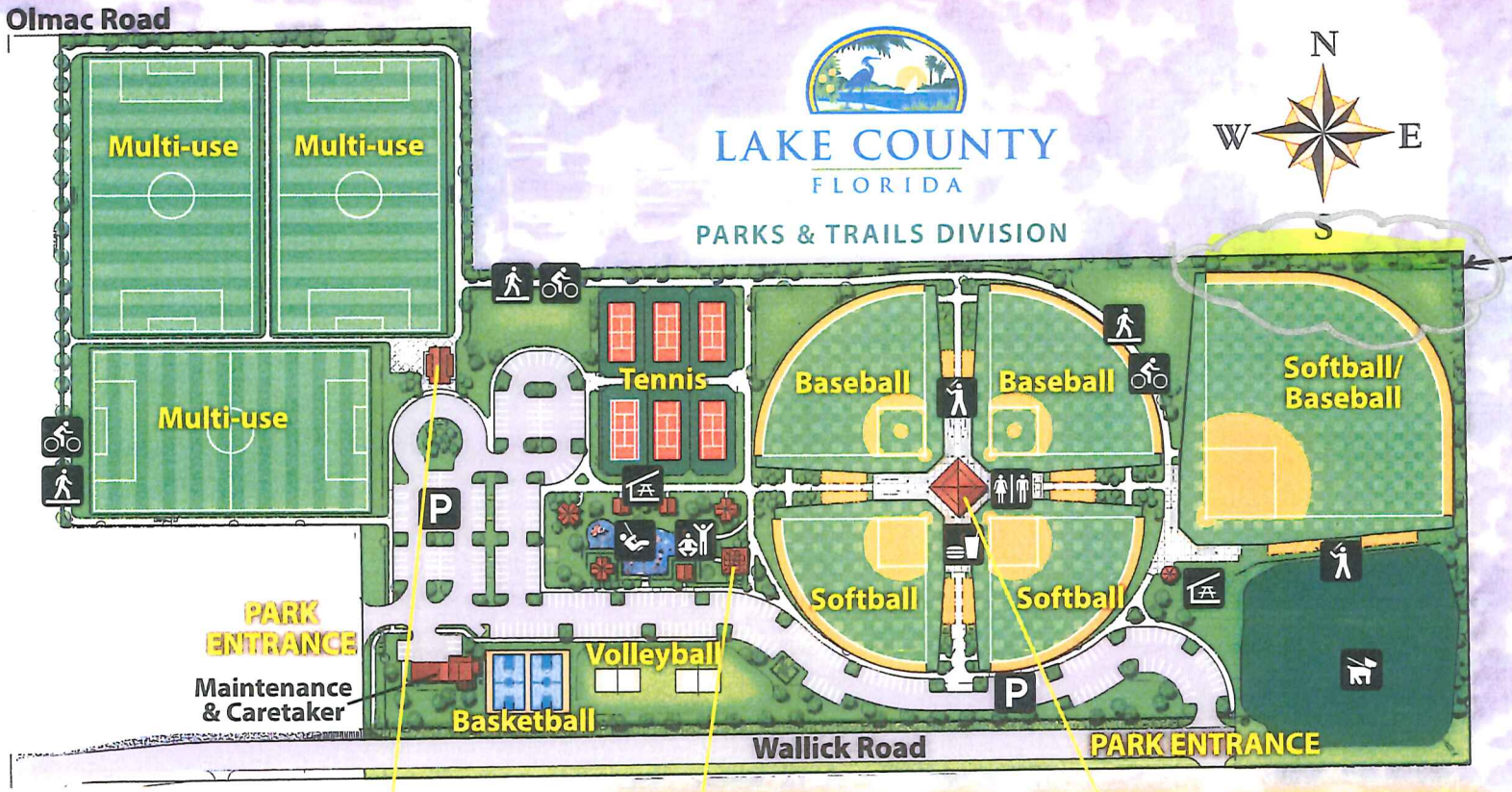

TOTAL ACRES: 34

SITE DIRECTORY

- Parking
- Multi-Use Trail
- Restroom
- Exercise Station
- Pavilion
- Playground
- Dog Park
- Concession
- Batting Cages

N.T.S.

Sample
only