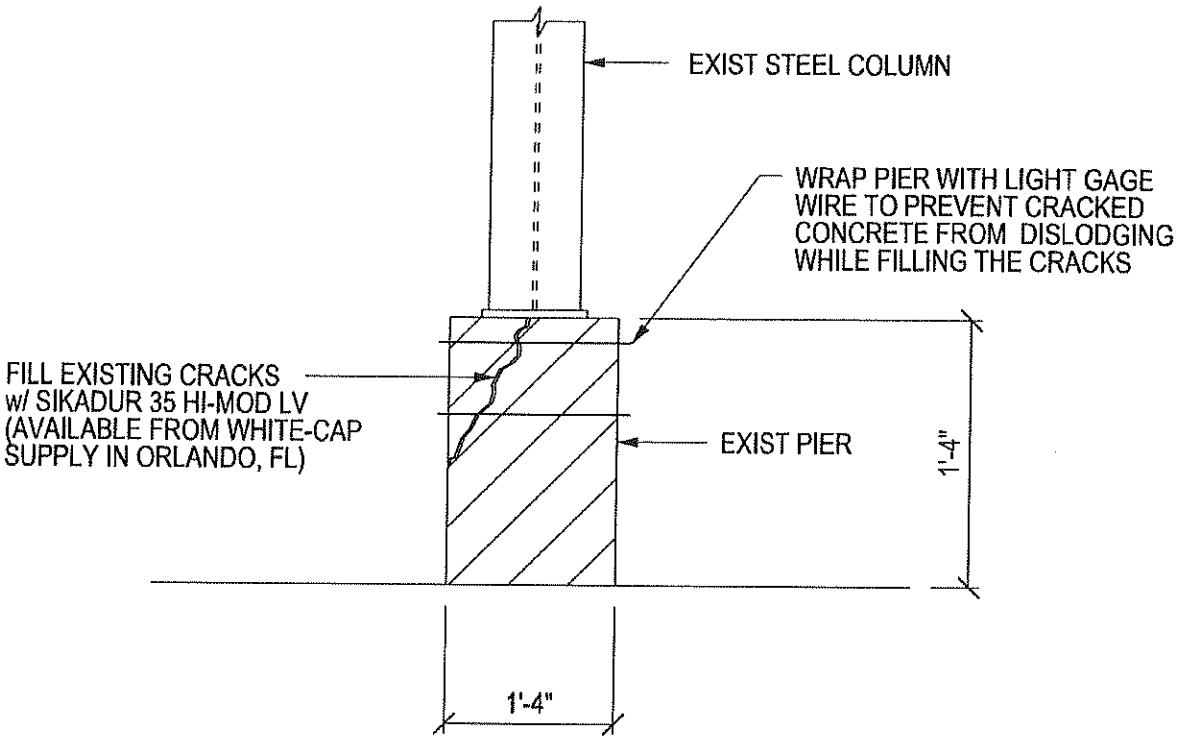

1 CONCRETE PIER REPAIR

CATHY TIEDGE
PE# 047763

HEERY design

Heery International Inc.
4700 Millenia Boulevard, Suite 550,
Orlando, Florida 32839 AA 0002293
407.992.6300 EB 0005176

PROJECT NAME LAKE COUNTY LANDFILL REPAIRS AT RECYCLING STRUCTURE TAVARES, FLORIDA	DATE ISSUED 11/08/2012 ISSUED FOR	SUPPLEMENTAL DRAWING MODIFIES C.D. SHT. SF-101
SHEET TITLE CONCRETE PIER REPAIR	PROJECT NUMBER 0819400	

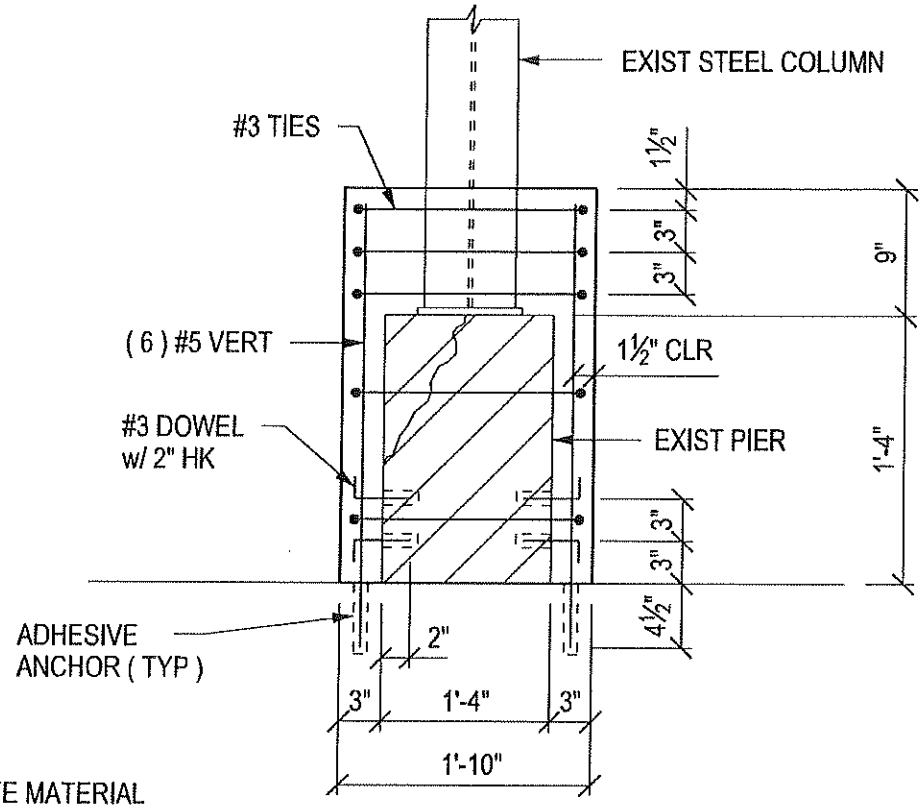

NOTES :
1. CONCRETE MATERIAL
   a. 4000psi @ 28 DAYS
   b. W/C RATIO = 0.50 MAX
2. ADHESIVE ANCHORING :
   HILTI "HIT-HY150" MAX"
   ADHESIVE

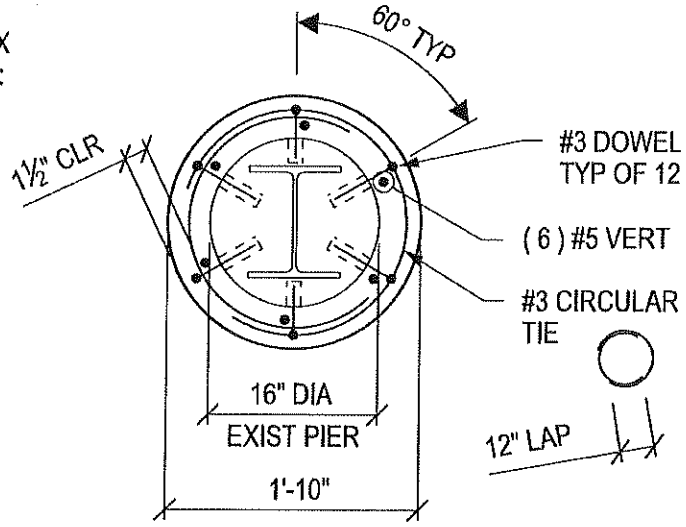

2 CONCRETE PIER REPAIR

CATHY TIEDGE
PE# 047763

HEERY design

Heery International Inc.
4700 Millenia Boulevard, Suite 550,
Orlando, Florida 32839
407.992.6300
AA 0002293
EB 0005176

PROJECT NAME	DATE ISSUED	SUPPLEMENTAL DRAWING MODIFIES C.D. SHT.
LAKE COUNTY LANDFILL REPAIRS AT RECYCLING STRUCTURE TAVARES, FLORIDA	11/08/2012 ISSUED FOR	SF-102
SHEET TITLE CONCRETE PIER REPAIR	PROJECT NUMBER 0819400	