RECONDITIONED DOT SPECIFICATIONS: [redacted], 17E, AND 17H DRUMS

DOT 17H

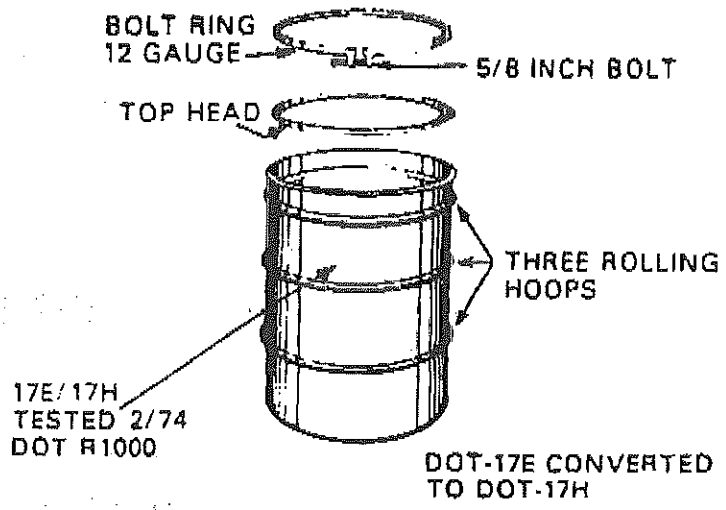
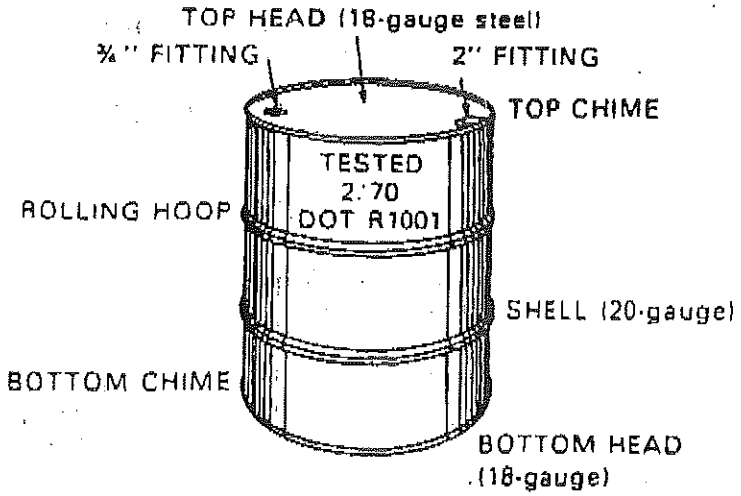
(DOT 17E)
Tight-head 20/18-gauge 55-gal. drum