Pine Forest Park- 32520 County Road # 44 Deland, FL 32720

1.01 SCOPE OF WORK: Provide all labor, materials, equipment, fuel and other incidental costs and supervision necessary for the installation of 90 lineal FT of 18 FT High Black vinyl 6 gauge schedule 40 chain link fencing at Pine Forest Park . All work and equipment shall be in strict compliance with the latest codes, standards and practices.

Misc. Items to be noted:

- Field verification by Contractor is recommended.
- 18 FT High Black Vinyl fence- Baseball/ Softball Backstop @ 90 feet each
- All fencing is to be installed as shown on attached plan.

Fence details for 18' High Fence

18' High Black Vinyl Coated 6 gauge schedule 40 chain link fence is required. Steel Chart for schedule of sizes of members is as follows:
Height of fence-18FT
Diameter of line posts-3 ½"
Post spacing -10 feet Max
Corner and end post- 4"diameter
Top, Upper Middle, Lower Middle and Bottom Rail- 1 5/8" diameter
Depth of post into footing (line post 3FT 2 ")
Depth of post into footing (end / corner / gate posts 4 FT 2 ")
Horizontal Braces at Corner and End post- 2 @ 1 5/8"
Diagonal Braces – ½ "diameter
Mesh to be placed on the outside of the fencing
Tie wire # 6 W & M gauge aluminum ties @ 15 o.c. for rails. Ties to be 12" apart on posts. End of ties should be wound in a telegraph trust 2 ½ turns.

1.02 SUBMITTALS:

A. Submit product data/specification and shop drawings to Park and Trails Division for review and approval of all items of work.

B. All submittals to be approved by Parks and Trails Division prior to contractor delivering materials to site.

1.03 FIELD CONDITIONS: Verify and coordinate all work to field locations and dimensions.

1.04 PRODUCT HANDLING:

A. Deliver products to site in manufacturer's containers or packaging.

B. Store in secure and weather protected area.

C. Return all damaged products to manufacturer.

PART II – PRODUCTS

2.01 MATERIALS: Provide products as called for on the drawing and specified herein. See furnishing schedule and descriptions on drawings for specific products and Manufacturer's specs.

PART III – EXECUTION

3.01 WORKMANSHIP:

A. All furnishings described herein shall be installed by qualified tradesman. All installation work and materials to be per manufacturer's specifications, or as directed by the Owner's Representative.

B. All work and materials are subject to the approval of the County.

C. All products shall be inspected by the County for damage and chipped or marred finish. Contractor shall replace any damaged or rejected products at no conditional cost to the owner. The owner's representative may at his option authorize acceptance of chipped or scratched painted surfaces repaired by contractor at his own risk.

3.1 INSTALLATION

A. Install furnishing in locations as indicated on the plans and details. Assure that all furnishings are installed plumb and level and in accordance with the plans and details.

B. Install as per manufacturer's specifications

3.2 ACCEPTANCE

A. The County will review each installation to determine compliance with plans and specifications prior to final acceptance of the work.

B. Any work not installed in accordance with the plans and specifications and rejected by the County shall be removed and replaced at the Contractor's expense.

3.3 GUARANTEES

A. The contractor shall furnish warranties in writing certifying that the quality and workmanship of all materials and installation furnished is in accordance with these specifications and in accordance with the original manufacturers' warranties. The contractor shall warrant the installation workmanship for a period of one year from the date of final acceptance of the job, or any accepted portion of the job.

3.4 CLEANING

A. Perform cleaning during installation of the work and upon completion of the work. Remove from site all excess materials, soil, debris, and equipment.

THREE (3) TEN FOOT PANELS

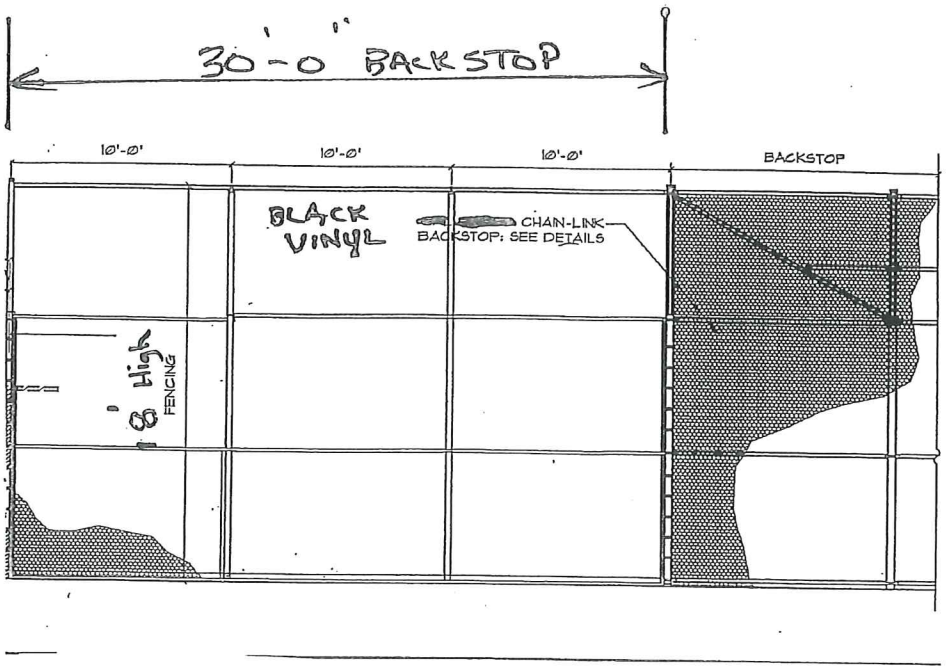

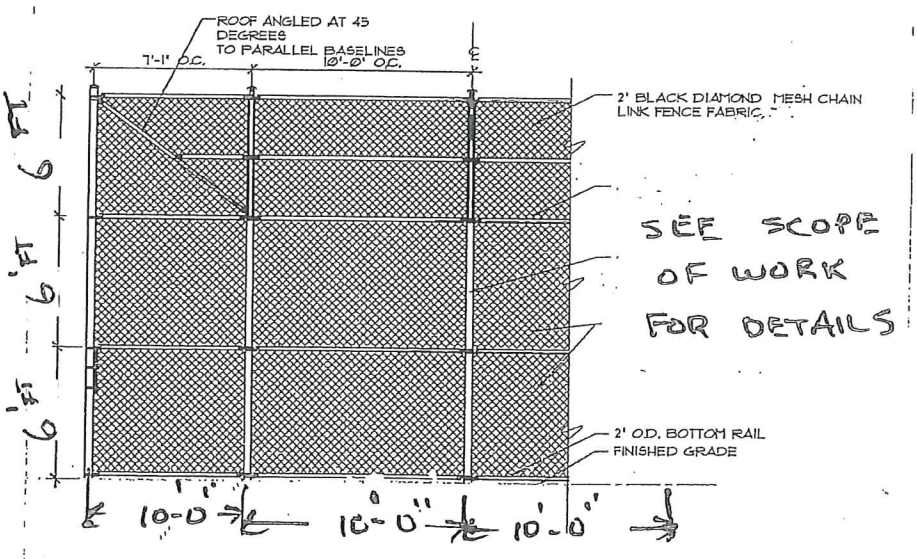

BACKSTOP DETAIL - ELEVATION

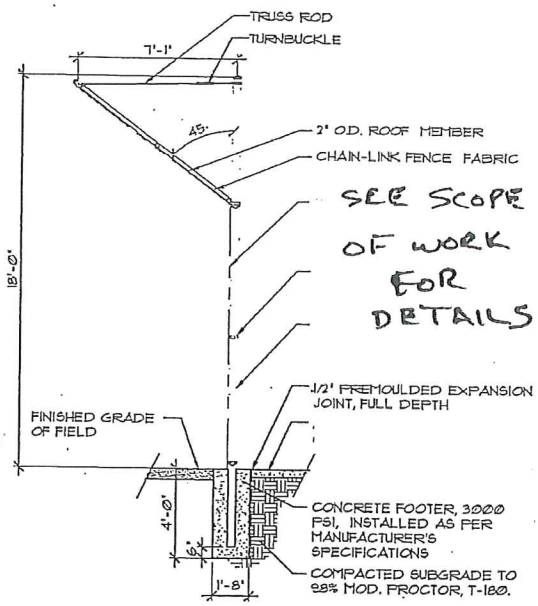

7 BACKSTOP DETAIL - SECTION

6 GAUGE SCHEDULE 40 CHAIN LINK FENCING (BLACK)

BACKSTOP (TYP.)

BASEBALL

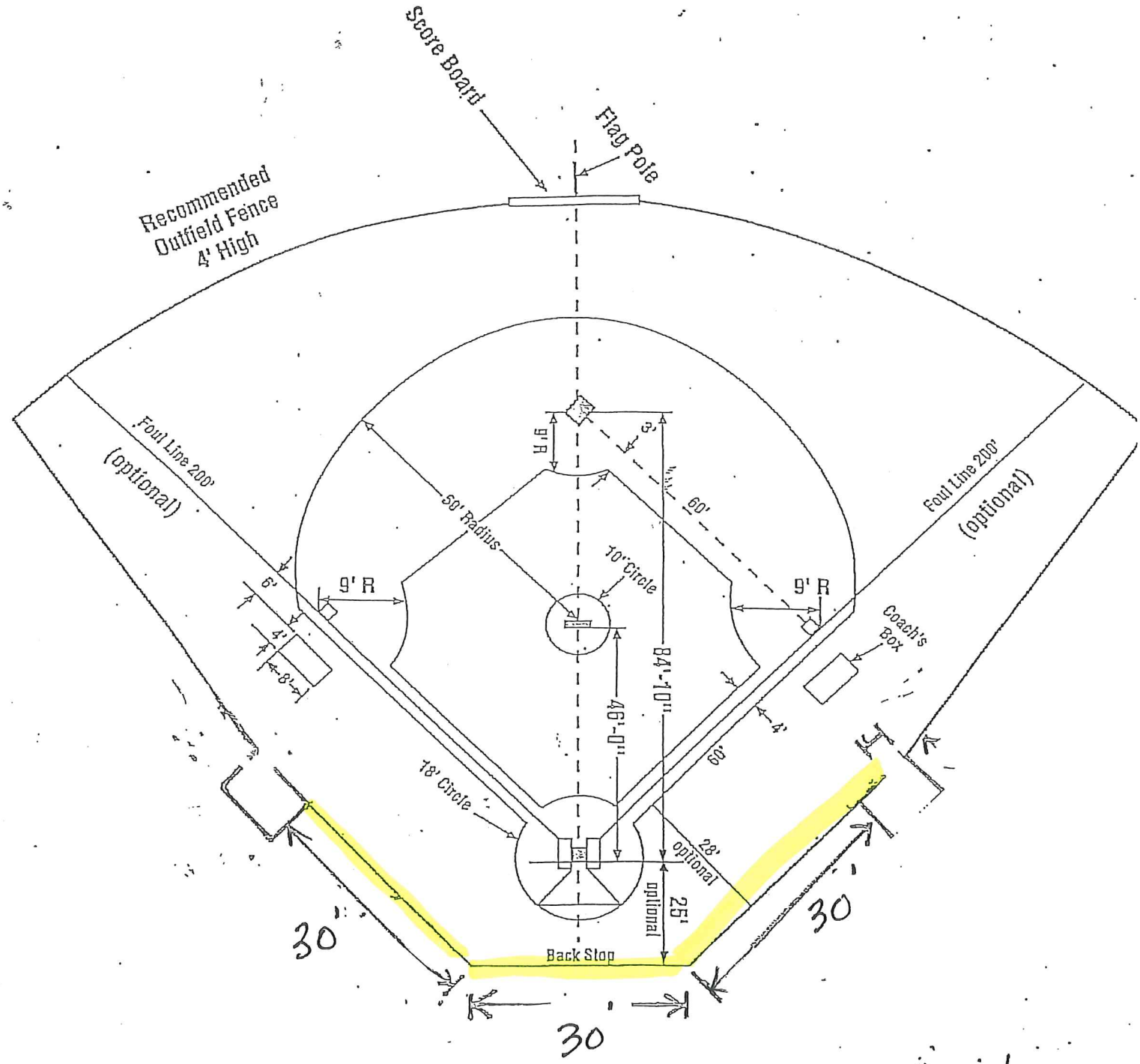

Scope of work includes but not limited to *Backstop = 90 FT @ 18 FT high of finish grade

Backstop on Baseball/ Softball Field

Map 1