HMT ENGINEERING, INC.

May 21, 1996

Post-it® Fax Note 7671	Date 5/21/96 # of pages ▸ 1
To Michael	From Hosein
Co./Dept. Original Raised	Co.
Phone # Sulphur bar	Phone #
Fax # Mailed	Fax #

Mr. Michael Steen
Jim Walter Homes, Inc.
PO Box 585037
Orlando, FL 32858

Re: T. Bailey Residence, San Antonio Model

Dear Michael:

We are writing to confirm that the exterior wall studs of the above referenced residence should be connected to the supporting sills with Simpson LSTA30 straps spaced at 32" on center. The straps should be nailed to studs and sills with (5) 8d nails, plus (2) 8d nails into the band joists. This spacing must be decreased to 16" on center in areas where the design wind velocity is 110 miles per hour.

Please feel free to contact us if we can be of further assistance.

Very truly yours,

HMT Engineering, Inc.

Hosein Taheri, P.E.
Fla. Reg. No. 43424

CC: Jim Teske
File 960213

P.O. Box 18573 • Tampa, Florida 33679 • (813) 839-4498 • FAX (813) 832-4527

HMT ENGINEERING Structural Engineers	SUBJECT: Jim Walter Homes T. Bailey Res. (San Antonio)		96 ϕ 213
	Designed by HT date 3/20/96	Checked by date	1/3

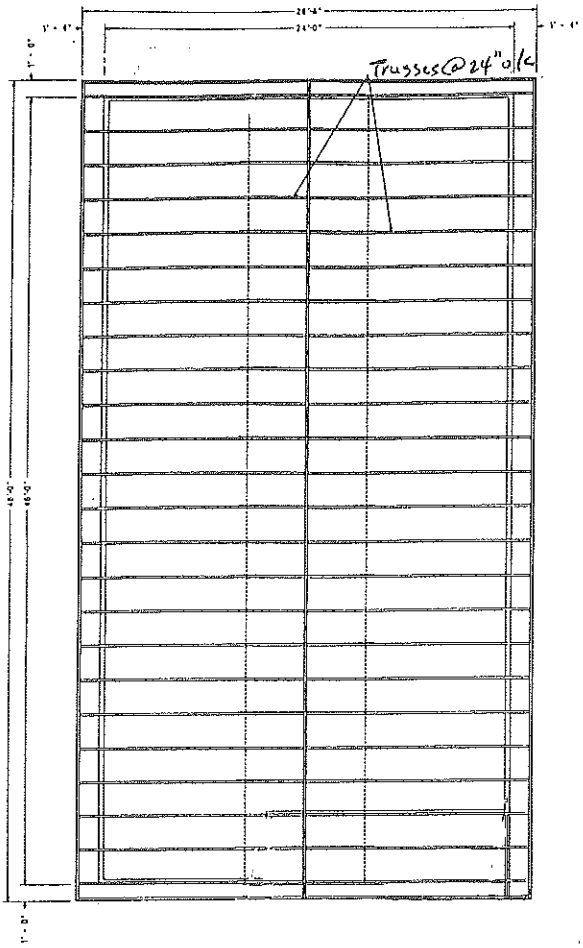

Truss Plan

using End Zone Pressure / suction values (see attached)

I - uplift @ EA. End of Trusses (Assuming 10.0 PSF Dead Load)

uplift = 416# @ EA. End (see Truss Engineering attached)
uplift Connector provided (1) Simp. H5 @ 455# > 416# o.k.

II - Lateral Load @ EA. corner (Load Case II Controls)
= (24.5 PSF)(48'.0/2)(8'.0/2) = 2352 #

Lateral Resistance of shearwalls (12'-9")(260 PLF) = 3315# > 2352#
o.k.

MAR 20 1996

P.O. Box 18573 • Tampa, Florida 33679 • (813) 839-4498 • FAX (813) 832-4527

Job	Truss	Truss Type	Qty	Ply	
HMT_ENG	JWH24CMN	FINK	1	1	HMT Engineering, Inc.

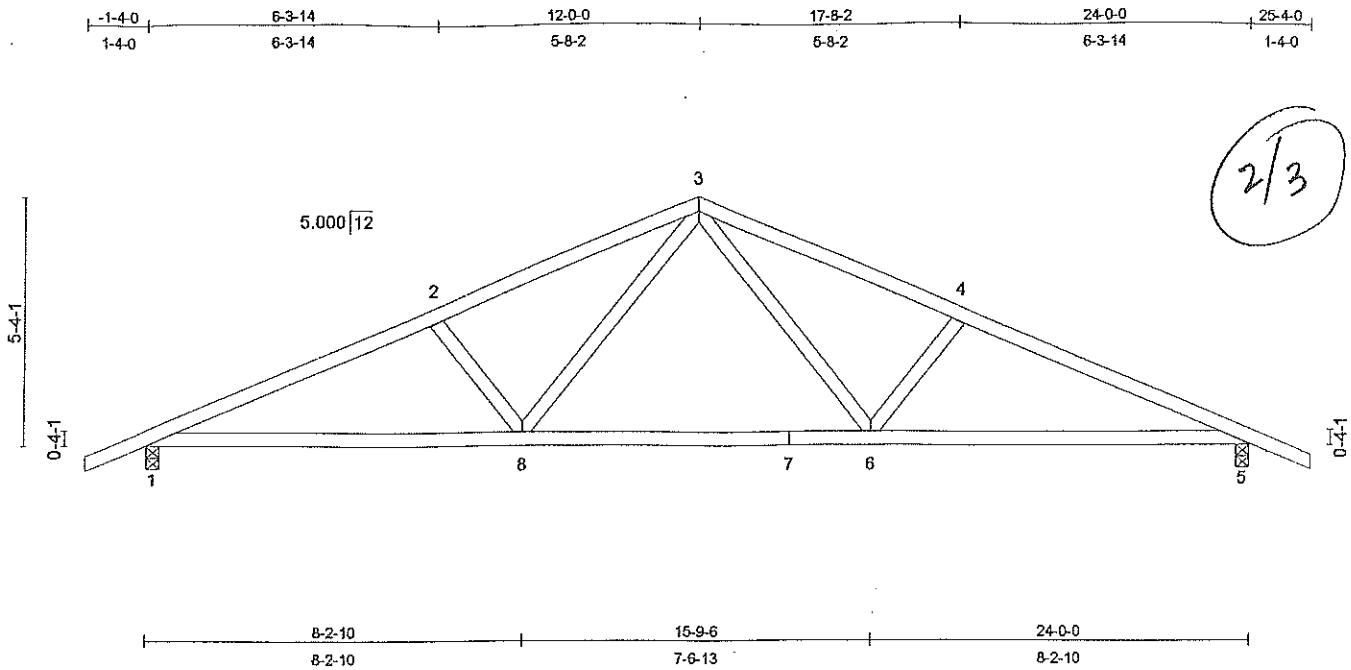

LOADING (psf)		SPACING	2-0-0	CSI		DEFL	(in)	(loc)	l/defl	PLATES	GRIP
TCLL	30.0	Plates Increase	1.33	TC	0.43	Vert(LL)	0.16	8/6	999		
TCDL	7.0	Lumber Increase	1.33	BC	0.58	Vert(TL)	0.24	8/6	999		
BCLL	0.0	Rep Stress Incr	YES	WB	0.18	Horz(TL)	0.06	5	n/a		
BCDL	10.0	Code	TPI			Min Length / LL defl = 240				Weight: 113 (lbs)	

LUMBER
TOP CHORD 2 X 4 SYP No.2
BOT CHORD 2 X 4 SYP No.2
WEBS 2 X 4 SYP No.3

BRACING
TOP CHORD Sheathed or 3-2-11 on center purlin spacing.
BOT CHORD 1-8:6-3-0, 7-8:6-3-0, 6-7:6-3-0, 5-6:6-3-0.

REACTIONS (lbs/size) 1=1213/0-3-8, 5=1213/0-3-8
Max Horz 1=-30(load case 2)
Max Uplift 1=-416(load case 4), 5=-416(load case 4)

FORCES
TOP CHORD 1-2=-2035, 2-3=-1774, 3-4=-1774, 4-5=-2035
BOT CHORD 5-6=1868, 6-7=1284, 7-8=1284, 1-8=1868
WEBS 2-8=-390, 3-8=588, 3-6=588, 4-6=-390

NOTES
1) This truss has been designed for the wind loads generated by 100.0 m.p.h. winds at 15.0 feet above ground level, using 5.0 p.s.f. top chord dead load and 5.0 p.s.f bottom chord dead load, 50.0 miles from hurricane oceanline, on a category I enclosed building, of dimensions 46.0 by 24.0 with exposure C (SBCCI/ASCE 7-93). Lumber Increase = 1.33, Plate Increase = 1.33. Both end verticals are exposed.
2) SIMPSON H2.5 connectors recommended to connect truss to bearing walls due to uplift as follows: Two each connectors at joint(s) 1, 5.

LOAD CASE(S) Standard

MAR 20 1996

HMT ENGINEERING
P.O. BOX 18573 TAMPA, FL 33679 (813)839-4498
Copyright 1994 by Tondelli Engineering, P.A. Tampa, Florida

CUSTOMER : JIM WALTER HOMES, INC.
JOB NUMBER : 960213 DATE : 03-20-1996
DESCRIPTION : T. BAILEY RES.

*** DESIGN WIND LOADS - 1994 STANDARD BUILDING CODE ***
*** COMPONENTS AND CLADDING ***
ENCLOSED BUILDING

3/3

WIND VELOCITY = 100 MPH
MEAN ROOF HEIGHT = 15.0 FT
VELOCITY PRESSURE = 20.44 PSF
USE FACTOR = 1.00

ROOF SLOPE = 5.00 : 12 (22.62 DEG)
TRIBUTARY AREA = 192.0 FT2

WALL WIND LOADS		
	WALL AREA	
	w	e
GCp (+)	1.073	1.073
GCp (-)	-1.149	-1.198
PRESSURE (PSF)	21.9	21.9
SUCTION (PSF)	-23.5	-24.5

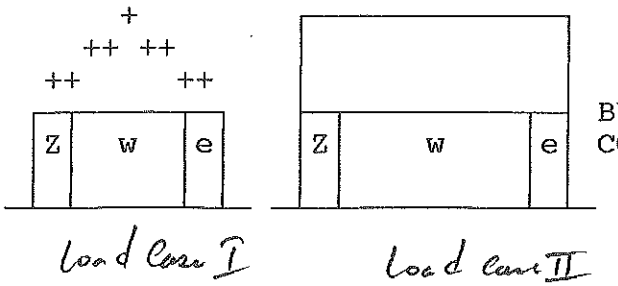

BUILDING WIDTH = 24.0 FT
CORNER DISTANCE, Z = 3.0 FT

MAR 20 1996

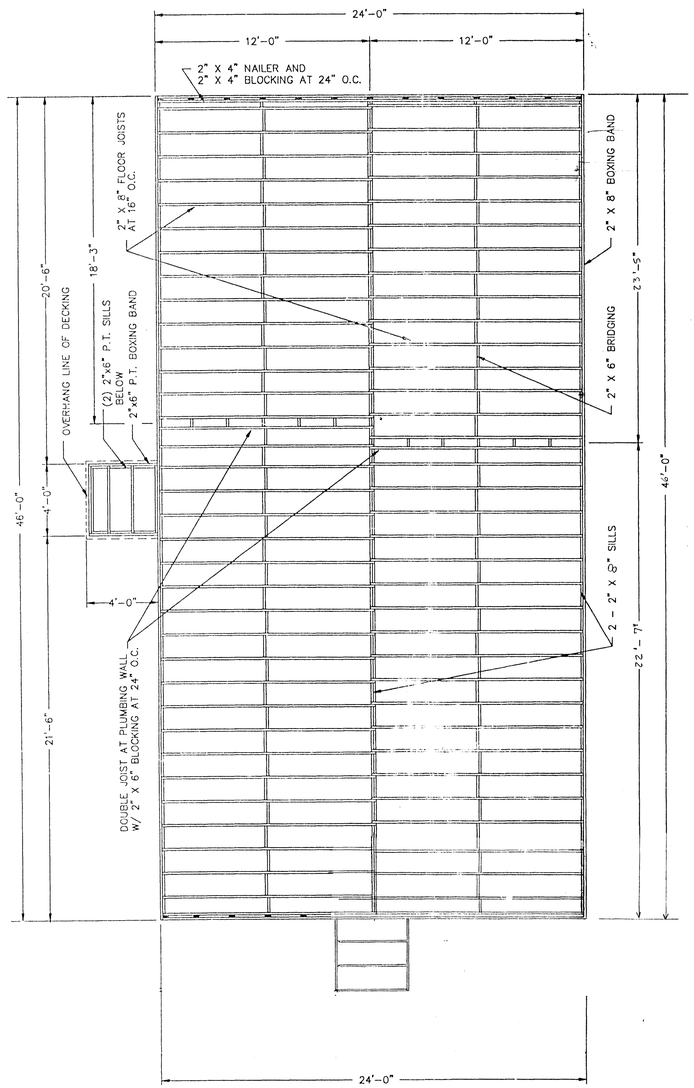

FLOOR FRAMING PLAN

NOTES: 1) ALL PORCH FRAMING TO BE P.T. MATERIAL, SILLS AND FLOOR JOIST MATERIAL JOINING PORCH FRAMING TO BE P.T. MATERIAL ALSO.
2) PORCH FLOORING TO EXTEND 2" BEYOND PORCH SILLS.

SCALE: 1/4" = 1'-0"

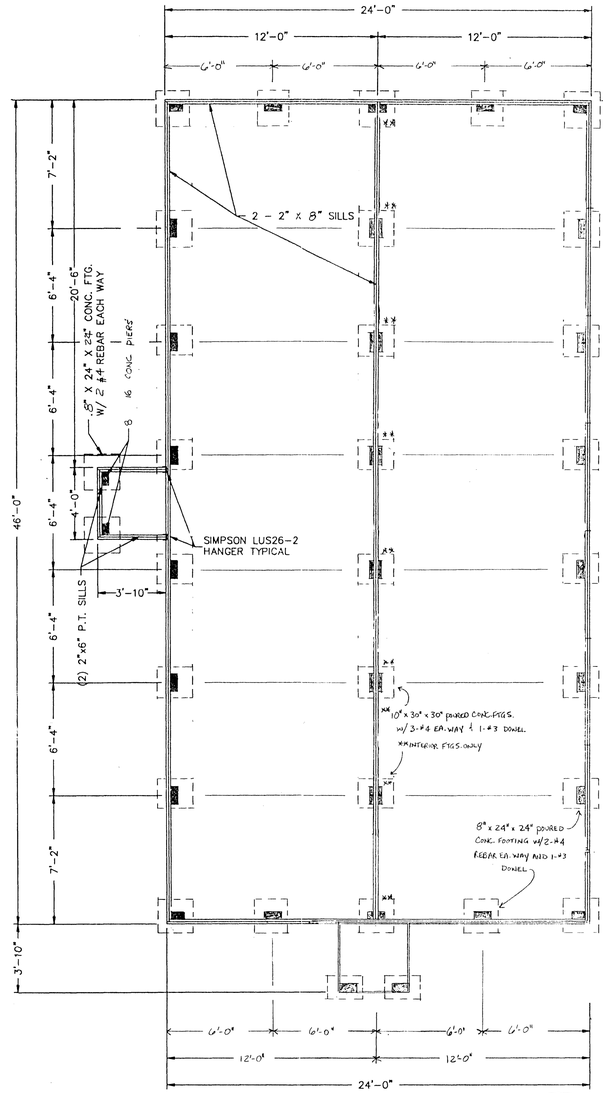

FOUNDATION PLAN - REVERSE FOR CONSTRUCTION

NOTES: 1) MAIN SILLS AT PORCH TO BE P.T. MATERIAL.
2) MAIN SILLS AT SIDE DOOR TO BE P.T. MATERIAL.

SCALE: 1/4" = 1'-0"

SEE REVISED PLANS ATTACHED 5-22-96

AREAS:
LIVING AREA 1104

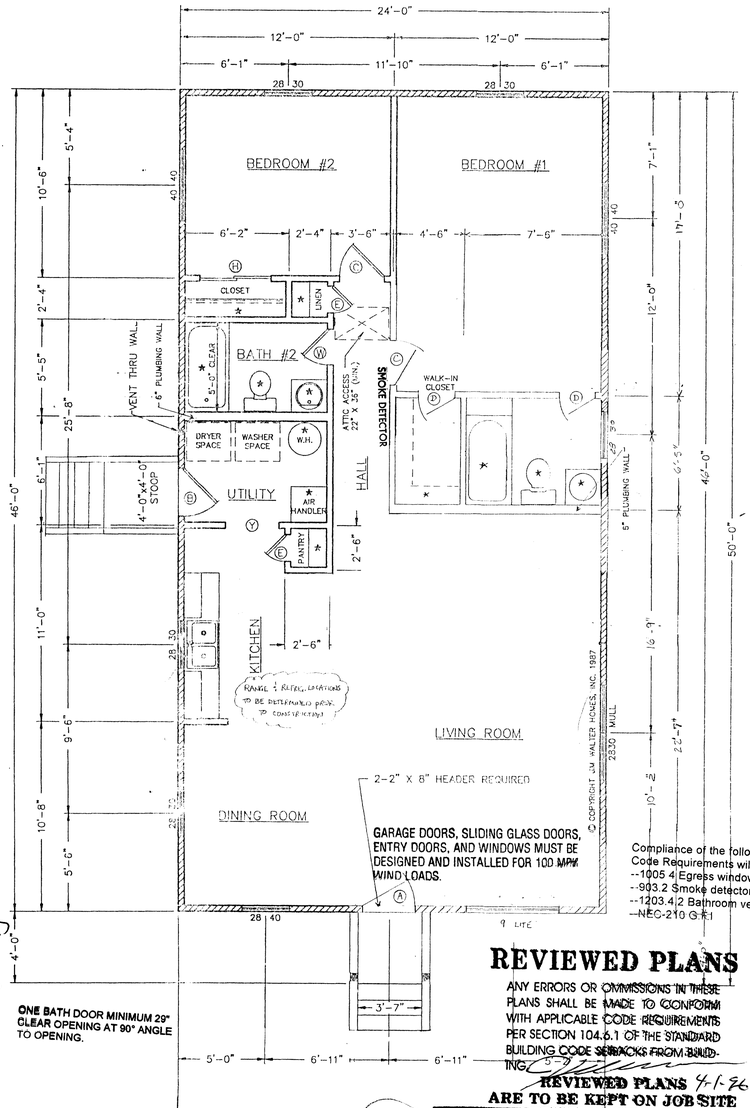

GARAGE DOORS, SLIDING GLASS DOORS, ENTRY DOORS, AND WINDOWS MUST BE DESIGNED AND INSTALLED FOR 100 MPH WIND LOADS.

ONE BATH DOOR MINIMUM 29" CLEAR OPENING AT 90° ANGLE TO OPENING.

Compliance of the following S Code Requirements will be e
--1005.4 Egress windows
--903.2 Smoke detectors
--1203.4.2 Bathroom ventilation
--NEC-210 G.F.I

REVIEWED PLANS

ANY ERRORS OR OMMISSIONS IN THESE PLANS SHALL BE MADE TO CONFORM WITH APPLICABLE CODE REQUIREMENTS PER SECTION 104.6.1 OF THE STANDARD BUILDING CODE SETBACKS FROM BUILDING

REVIEWED PLANS 4-1-96
ARE TO BE KEPT ON JOB SITE
LAKE COUNTY BUILDING DEPARTMENT
96031567

FLOOR PLAN - REVERSE FOR CONSTRUCTION

SCALE: 1/4" = 1'-0"

▨ - SHEAR WALL LOCATION

SYMBOL	DOORS	ROUGH OPENING WIDTH	ROUGH OPENING HEIGHT
A	3'-0" X 6'-8" 6 RAISED PANEL	3'-2 3/4"	6'-10 1/2"
B	2'-8" X 6'-8" FIXED SASH	2'-10 3/4"	6'-10 1/2"
C	2'-6" X 6'-8" INTERIOR FLUSH ★	2'-8 1/2"	6'-10 1/2"
D	2'-0" X 6'-8" INTERIOR FLUSH ★	2'-2 1/2"	6'-10 1/2"
E	1'-6" X 6'-8" INTERIOR FLUSH ★	1'-8 1/2"	6'-10 1/2"
H	4'-0" X 6'-8" BY-PASS ★	4'-1 7/8"	6'-10 1/2"
M	2'-0" X 4'-0" INTERIOR FLUSH ★	2'-2 1/2"	4'-2 1/2"
P	3'-0" X 6'-8" INTERIOR FLUSH ★	3'-2 1/2"	6'-10 1/2"
F	3'-0" X 6'-8" CROSSBUCK	3'-2 3/4"	6'-10 1/2"
Y	3'-0" X 6'-10" OPENING	3'-1"	6'-10 1/2"
S	6'-0" X 6'-8" SL. GL. DOOR	6'-0 1/2"	6'-8 1/4"
W	2'-8" X 6'-8" INTERIOR FLUSH ★	2'-10 1/2"	6'-10 1/2"

(WHITE FRAME-INSULATED)

WINDOWS	ROUGH OPENING WIDTH	ROUGH OPENING HEIGHT
2830 SINGLE	33"	37"
2830 MULL	65 1/8"	37"
2840 SINGLE	33"	49"
2840 MULL	65 1/8"	49"
4040 SLIDER	49"	49 1/4"
9 LITE PICTURE	63"	63"

GENERAL NOTES

THE PURCHASE PRICE OF THIS HOME DOES NOT INCLUDE STARRED ★ ITEMS SHOWN ON THE PLANS: LAVATORY, TUB, WATER CLOSET, WATER HEATER, KITCHEN CABINETS, INTERIOR DOORS, HEATER, ETC. THESE ITEMS ARE SHOWN ON THE PLANS AS A SUGGESTED LAYOUT FOR THE CONVENIENCE OF THE PURCHASER. IF DESIRED, THESE ITEMS ARE AVAILABLE AT ADDITIONAL CHARGE.

ITEMS INDICATED BY DOTTED LINES ARE SHOWN FOR THE CONVENIENCE OF THE BUYER AND ARE NOT AVAILABLE FROM JIM WALTER HOMES, INC.

- TO THE BEST OF THE ENGINEERS KNOWLEDGE AND BELIEF, THE STRUCTURAL PLANS AND SPECIFICATIONS COMPLY WITH THE STANDARD BUILDING CODE, SECTION 1606 FOR 110 mph WIND ZONE (1994 EDITION)
- THIS DRAWING AND DESIGN IS VALID FOR 12 MONTHS AFTER THE DATE IT IS SIGNED AND SEALED.
- SIGNED AND SEALED FOR THE STRUCTURAL PORTION OF THIS DRAWING ONLY

I HAVE REVIEWED THESE PLANS AND THEY CORRECTLY REFLECT THE CHANGES I HAVE REQUESTED. SIGNED THIS _____ DAY OF _____ 19 __.

CUSTOMER SIGNATURE

A PROPOSED NEW RESIDENCE FOR:
BAILEY, TIM
LAKE CO., FL.
ORLANDO REGION

DRAWN BY - R. GRANT DATE - 3/13/96

THE SAN ANTONIO

© COPYRIGHT JIM WALTER HOMES, INC. 1987
1500 N. DALE MABRY HWY., TAMPA, FL.

SHEET 1

MAR 20 1996

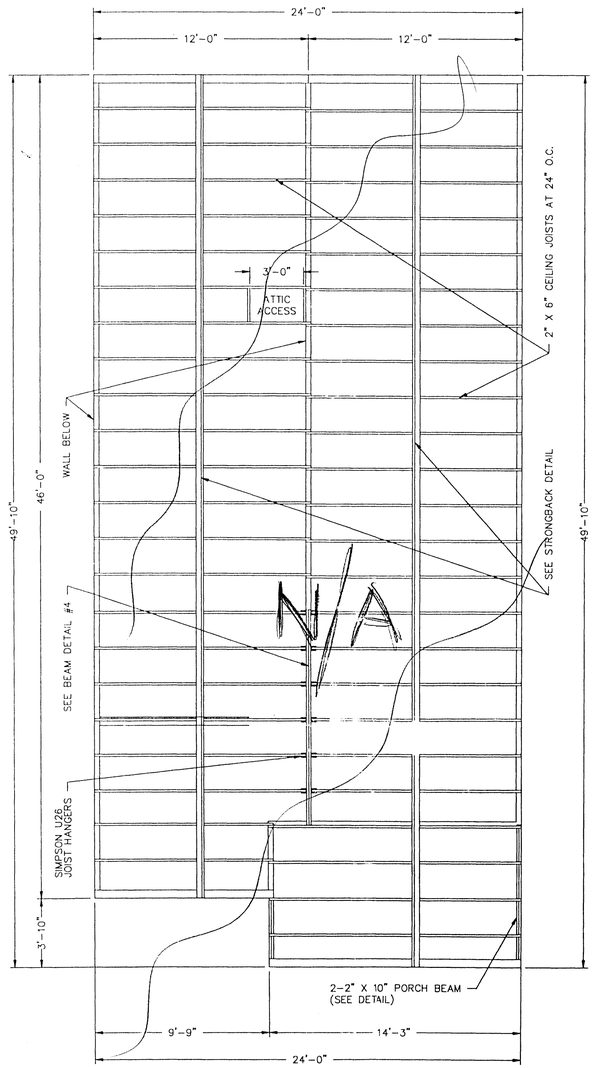

CEILING JOIST PLAN N/A - TRUSSES TO BE USED

SCALE: 1/4" = 1'-0"

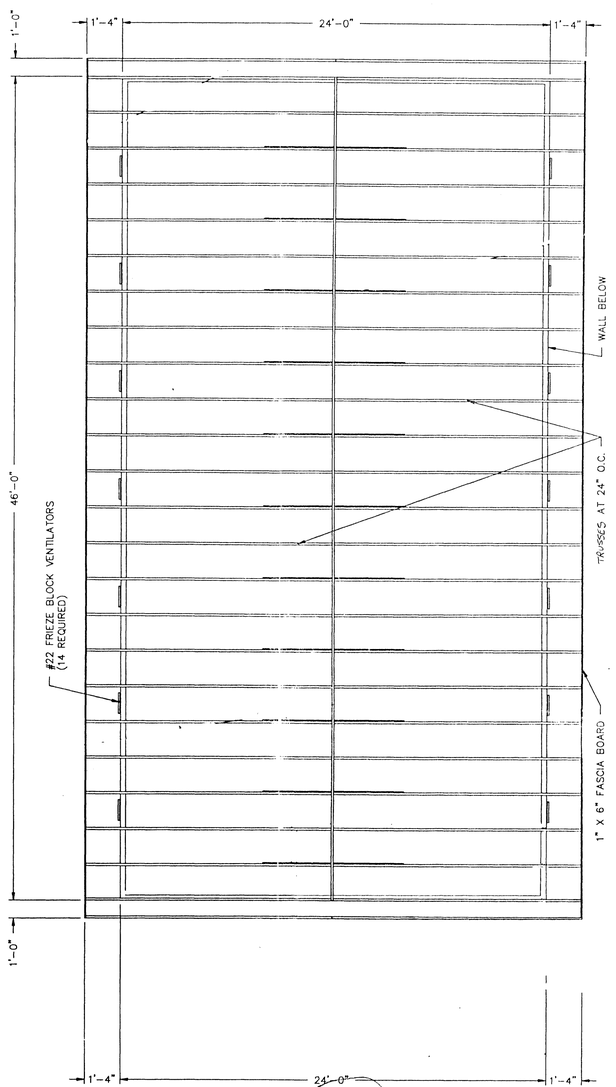

TRUSS PLAN - REVERSE

NOTE: WHEN RAFTERS ARE SPACED 24" O.C., PLY CLIPS MUST BE INSTALLED

SCALE: 1/4" = 1'-0"

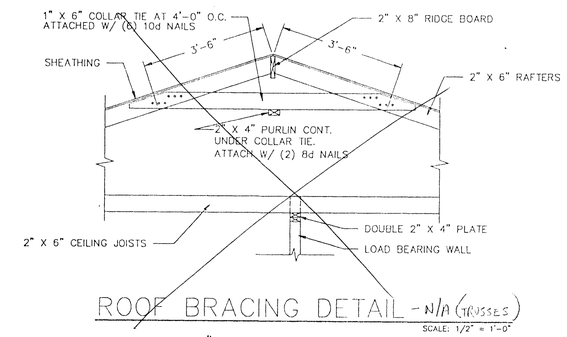

ROOF BRACING DETAIL - N/A (TRUSSES)

SCALE: 1/2" = 1'-0"

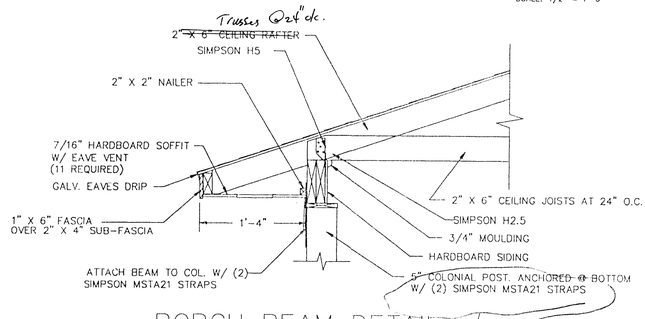

PORCH BEAM DETAIL N/A

SCALE: 3/4" = 1'-0"

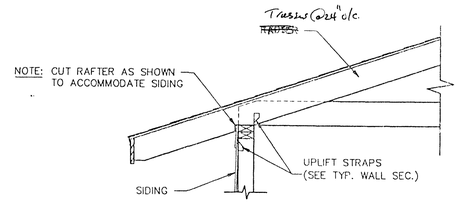

SIDING DETAIL AT TRUSSES

SCALE: 3/4" = 1'-0"

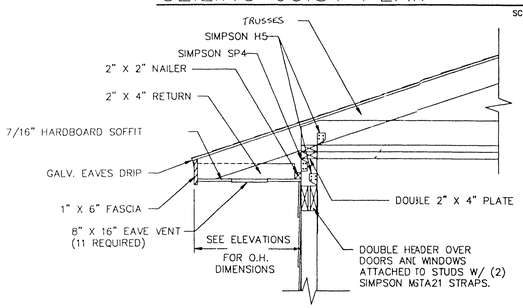

BOXED EAVES DETAIL

SCALE: 3/4" = 1'-0"

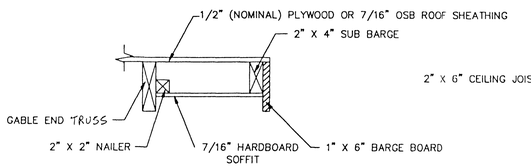

SECTION - AT GABLE END

SCALE: 1 1/2" = 1'-0"

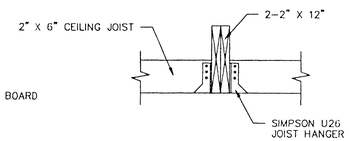

BEAM DETAIL NO. 4 - N/A (TRUSSES)

SCALE: 1/2" = 1'-0"

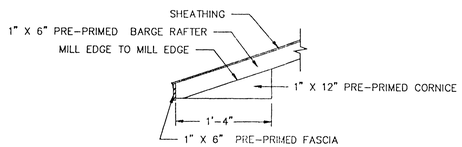

CORNICE RETURN DETAIL

SCALE: NTS

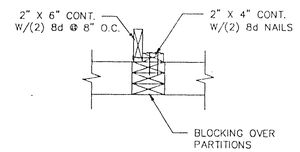

STRONGBACK DETAIL - N/A (TRUSSES)

SCALE: 1" = 1'-0"

- TO THE BEST OF THE ENGINEERS KNOWLEDGE AND BELIEF, THE STRUCTURAL PLANS AND SPECIFICATIONS COMPLY WITH THE STANDARD BUILDING CODE, SECTION 1606 FOR 110 mph WIND ZONE (1994 EDITION)
- THIS DRAWING AND DESIGN IS VALID FOR 12 MONTHS AFTER THE DATE IT IS SIGNED AND SEALED.
- SIGNED AND SEALED FOR THE STRUCTURAL PORTION OF THIS DRAWING ONLY

THE SAN ANTONIO

© COPYRIGHT JIM WALTER HOMES, INC. 1987

1500 N. DALE MABRY HWY., TAMPA, FL.

SHEET 2

MAR 20 1996

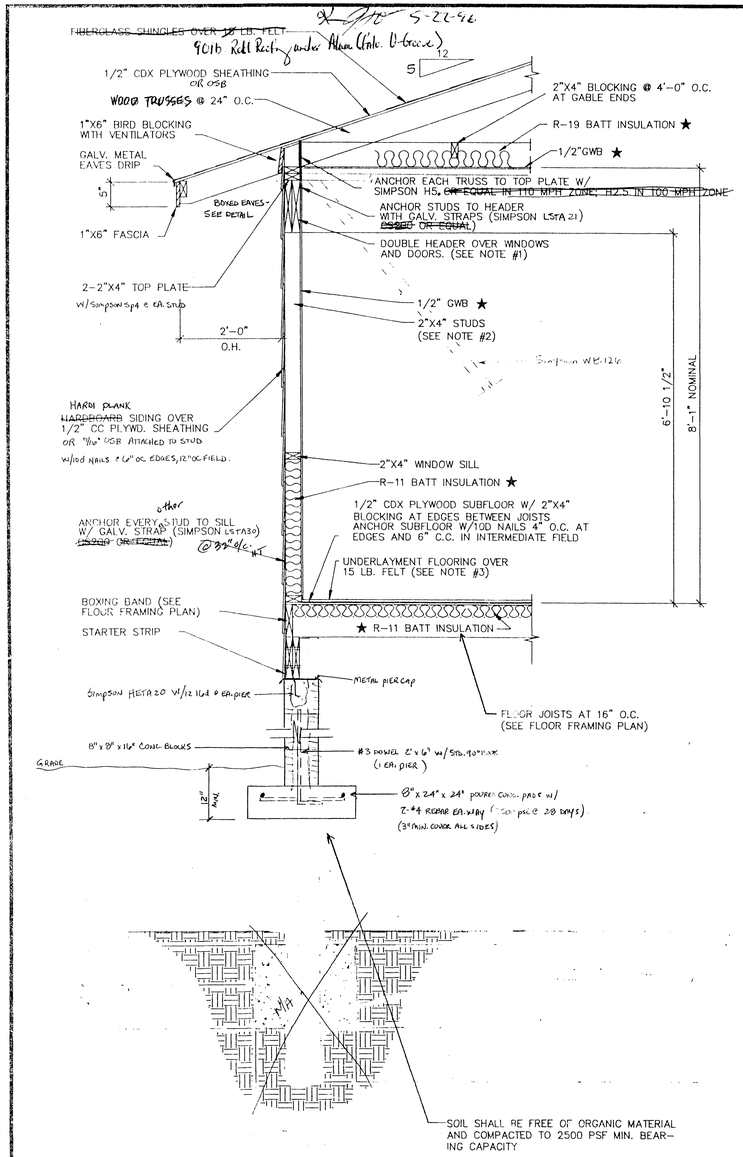

TYPICAL WALL SECTION

NO SCALE

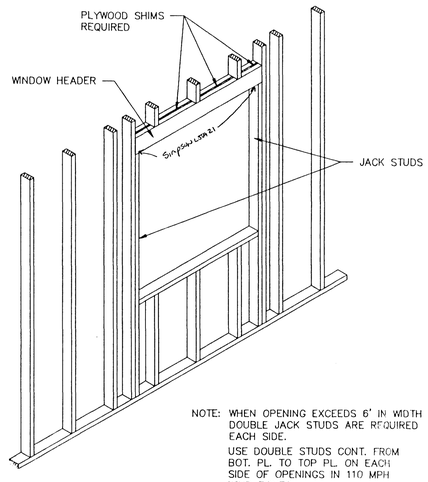

TYPICAL WINDOW HEADER DETAIL

NO SCALE

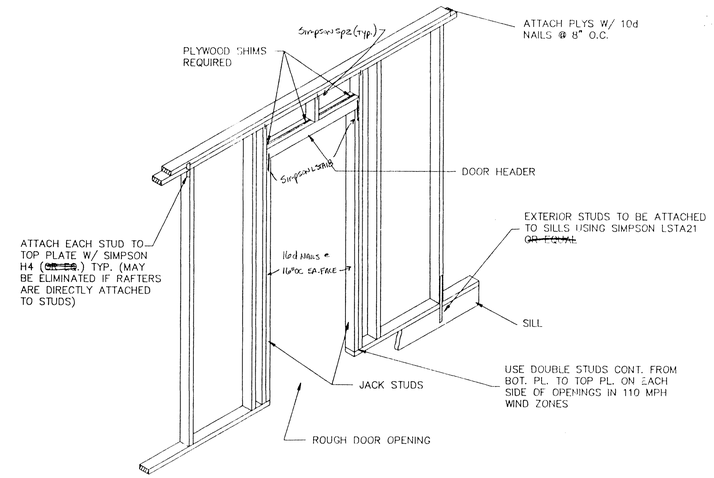

TYPICAL DOOR HEADER DETAIL

NO SCALE

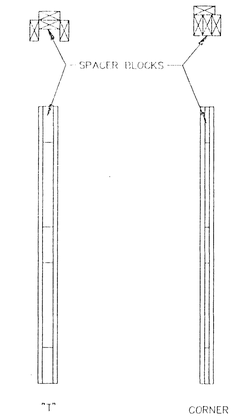

TYPICAL "T" & CORNER

NO SCALE

STRUCTURAL NOTES

1) CODES:
   1.1 STANDARD BUILDING CODE CONGRESS INTERNATIONAL (1991).
   1.2 BUILDING CODE REQUIREMENTS FOR REINFORCED CONCRETE (ACI 318-89).
   1.3 AMERICAN SOCIETY OF CIVIL ENGINEERS MINIMUM DESIGN LOADS FOR BUILDINGS AND OTHER STRUCTURES (ASCE 7-88).

2) DESIGN CRITERIA:
   2.1 DWELLING FLOORS - 40 PSF LIVE LOAD.
   2.2 BALCONIES - 60 PSF LIVE LOAD.
   2.3 WALKWAYS - 80 PSF LIVE LOAD.
   2.4 ROOF OVER LIVING AREAS - 30 PSF LIVE LOAD, 17 PSF (7 PSF T/C & 10 PSF B/C) DEAD LOAD FOR SHINGLE ROOFS.
   2.5 WIND - 110 MPH, PER SBCCI UNLESS NOTED OTHERWISE.
   2.6 NET UPLIFT DEAD LOADS 10 PSF SHINGLE.

3) SOIL:
   3.1 MINIMUM ALLOWABLE SOIL PRESSURE 2000 PSF.

4) CONCRETE:
   4.1 CONCRETE COMPRESSIVE STRENGTH AT 28 DAYS: 2500 PSI (NORMAL WEIGHT).
   4.2 REINFORCING BARS: ASTM A615 (GRADE 60).
   4.3 WELDED WIRE FABRIC (WWF): ASTM A185.
   4.4 DETAIL REINFORCEMENT IN ACCORDANCE WITH ACI 315.
   4.5 CONCRETE COVERAGE OF REINFORCEMENT: FOOTINGS 3" BOTTOM AND SIDES.
   4.6 EARTH SUPPORTED SLABS: (INCLUDING EXTERIOR WALK AND DRIVE SLABS) 4" THICK, REINFORCED WITH 6X6 - W1.4 X W1.4 WWF AT MID DEPTH OF SLAB. FIBERMESH MAY BE USED IN LIEU OF WWF AT CONTRACTOR'S OPTION.
   4.7 CONCRETING OPERATIONS SHALL COMPLY WITH ACI STANDARDS.
   4.8 LAP SPLICE SHALL BE AS FOLLOWS: #5 BAR 24", #4 BAR 20", #3 BAR 15".

5) MASONRY:
   5.1 DESIGN AND CONSTRUCTION SHALL CONFORM TO THE SPECIFICATION OF THE NATIONAL CONCRETE MASONRY ASSOCIATION AND ACI 530.
   5.2 MINIMUM MASONRY UNIT STRENGTH: f'm 1350 PSI.
   5.3 MORTAR SHALL BE TYPE S OR M.
   5.4 ALL BLOCK CELLS AND CAVITIES BELOW GRADE SHALL BE FILLED WITH CONCRETE.
   5.5 FILL CELLS W/ (1) #5 BAR SHALL BE LOCATED @ 6'- 0" O/C MAX, AT EACH CORNER AND EACH SIDE OF OPENINGS GREATER THAN OR EQUAL TO 6'-0".

6) WOOD:
   6.1 WOOD FRAMING MEMBERS: #2 SOUTHERN YELLOW PINE (UNLESS NOTED OTHERWISE) WITH AN ALLOWABLE BENDING STRESS (Fb) = 1250 PSI AND A MODULUS OF ELASTICITY = 1,600,000 PSI. SPF OK FOR STUDS.
   6.2 ALL EXPOSED WOOD OR WOOD IN CONTACT WITH EARTH OR CONCRETE TO BE PRESSURE TREATED.
   6.3 ROOF SHEATHING: 1/2" C-D GRADE PLYWOOD (OR 7/16" OSB) UNDER 30# FELT UNDER 240# FIBERGLASS SHINGLES.
   6.4 UNTREATED WOOD SHALL NOT BE IN DIRECT CONTACT WITH CONCRETE. SCAT PLATES SHALL BE PROVIDED AT BEARING LOCATIONS WITHOUT WOODEN TOP PLATES.
   6.5 ROOF DIAPHRAGM DESIGNED FOR FOLLOWING SHEAR CAPACITY:
      200 PLF @ SIDEWALLS
      280 PLF @ ENDWALLS

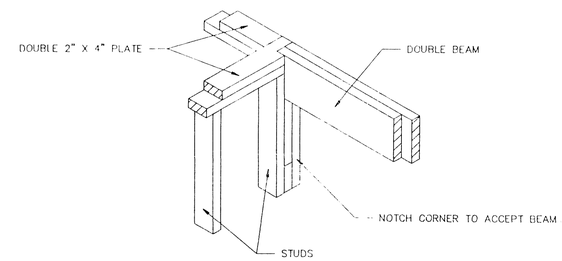

BEAM TIE DETAIL AT CORNER

NO SCALE

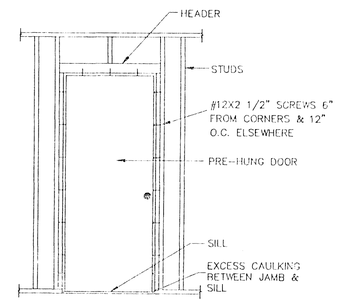

DOOR INSTALLATION

NTS

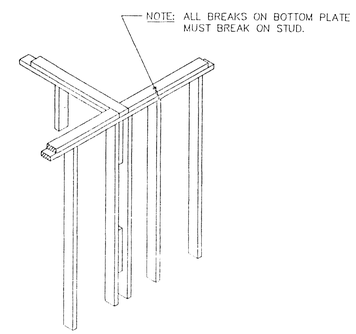

TYPICAL WALL TIE

NO SCALE

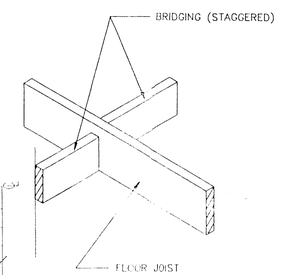

BRIDGING DETAIL

NO SCALE

ROOF DIAPHRAGM NAILING SCHEDULE - 110 mph ZONE

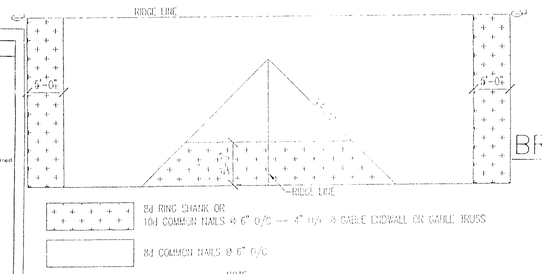

WALL SECTION NOTES

1. DOUBLE HEADERS:
   2-2" X 4" OVER INTERIOR DOORS IN NON-LOAD BEARING WALLS.
   2-2" X 6" OVER EXTERIOR AND INTERIOR DOORS IN LOAD BEARING WALLS.
   2-2" X 6" OVER 28 SERIES SINGLE AND 40 SERIES WINDOWS
   2-2" X 8" OVER 28 SERIES MULL AND 9-LITE WINDOWS.
   2-2" X 8" OVER 6'-0" SLIDING GLASS DOORS (DOUBLE JACK STUDS EACH SIDE).
   2-2" X 12" OVER OTHER OPENINGS TO 6'-6" MAX. (DOUBLE JACK STUDS EACH SIDE).
2. STUD SPACING:
   16" O.C. AT ALL EXTERIOR AND INTERIOR LOAD BEARING WALLS.
   16" O.C. AT ALL INTERIOR NON-LOAD BEARING WALLS.
3. UNDERLAYMENT FLOORING
   3/8" PLYWOOD OR 5/8" PARTICLE BOARD (OPTIONS OFFERED).
4. STRUCTURAL MEMBERS TO HAVE MIN. FIBER STRESS IN BENDING OF 1200 P.S.I.
5. CONCRETE TO BE 3000 PSI IN 28 DAYS W/ MIN. 4" SLUMP
6. STARRED (★) ITEMS SHOWN ARE NOT INCLUDED IN THE BASIC PRICE.

NAILING SCHEDULE

Ledger strip	16d common	3 at each joist
Sole plate to joist or blocking, face nail	16d common	16" O.C.
Top or sole plate to stud, end nailed	16d common	2
Stud to sole plate, toe nail	8d common	4
Doubled studs, face nail	10d common	24" O.C.
Doubled top plates, face nail	10d common	16" O.C.
Continuous header, two pieces	16d common	16" O.C. along each edge
Continuous header to stud, toe nail	8d common	3
1x8 sheathing or less to each bearing, face nail	8d common	2
Over 1x8 sheathing to each bearing, face nail	8d common	3
Built-up corner studs	16d common	24" O.C.
Built-up girders and beams up to three members	20d common	32" O.C. at top and bottom and staggered 2 ends and at each splice
1/2" Gypsum Sheathing	11 ga 1 1/2" Galvanized 7/16" head	4" O.C. at edges 8" O.C. at other bearings
5/8" Gypsum Sheathing	11 ga 1 3/4" Galvanized 7/16" head	4" O.C. at edges 8" O.C. at other bearings
Gypsum Wallboard 1/2"	1 3/8" drywall nail	7" O.C. on ceilings 8" O.C. on walls
5/8"	1 1/2" drywall nail	7" O.C. on ceilings 8" O.C. on walls
Hardboard Lap Siding, Direct to Studs	8d corrosion resistant with minimum shank diameter of 0.099 inch and minimum head diameter of 0.240 inch	16 inch O.C. at top and bottom edges
Hardboard Lap Siding, Over Sheathing	10d corrosion resistant with minimum shank diameter of 0.099 inch and minimum head diameter of 0.240 inch	16 inch O.C. at top and bottom edges
Hardboard Panel Siding, Direct to Studs	6d corrosion resistant with minimum shank diameter of 0.092 inch and minimum head diameter of 0.225 inch	6 inch O.C. at edges and 12 inch O.C. at intermediate supports
Hardboard Panel Siding, Over Sheathing	6d corrosion resistant with minimum shank diameter of 0.092 inch and minimum head diameter of 0.225 inch	6 inch O.C. at edges and 12 inch O.C. at intermediate supports

- TO THE BEST OF THE ENGINEERS KNOWLEDGE AND BELIEF, THE STRUCTURAL PLANS AND SPECIFICATIONS COMPLY WITH THE STANDARD BUILDING CODE, SECTION 1205 FOR 110 mph WIND ZONE (1991 EDITION)
- THIS DRAWING AND DESIGN IS VALID FOR 12 MONTHS AFTER THE DATE IT IS SIGNED AND SEALED.

THE SAN ANTONIO

© COPYRIGHT JIM WALTER HOMES, INC. 1988

1500 N. DALE MABRY HWY., TAMPA, FL.

SHEET 3

MAR 20 1996

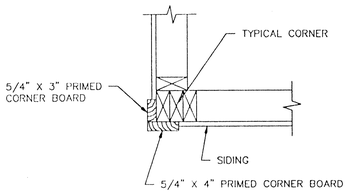

CORNER BOARD DETAIL

NOTE: JOINTS SHOULD BE MADE ON SIDES. SCALE: 1 1/2" = 1'-0"

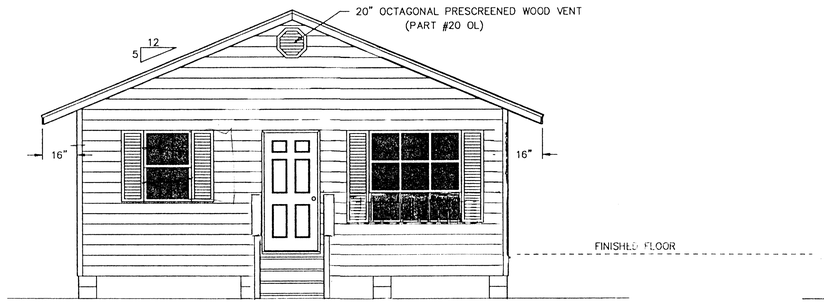

FRONT

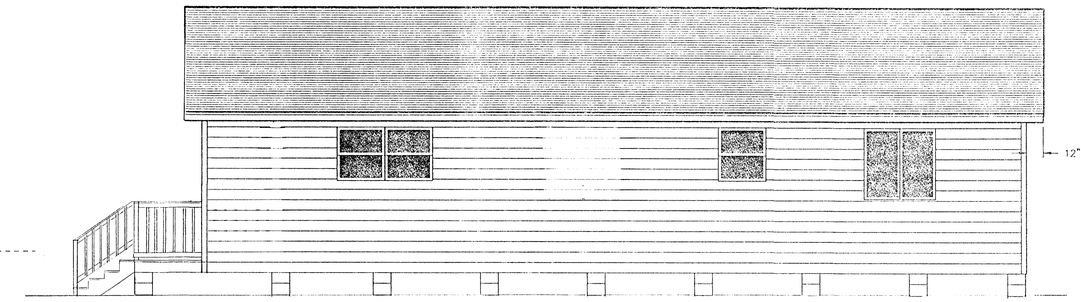

RIGHT SIDE

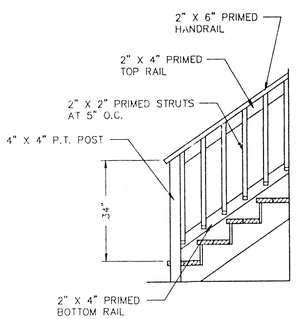

STEP RAILING DETAIL

SCALE: 1/2" = 1'-0"

LEFT SIDE

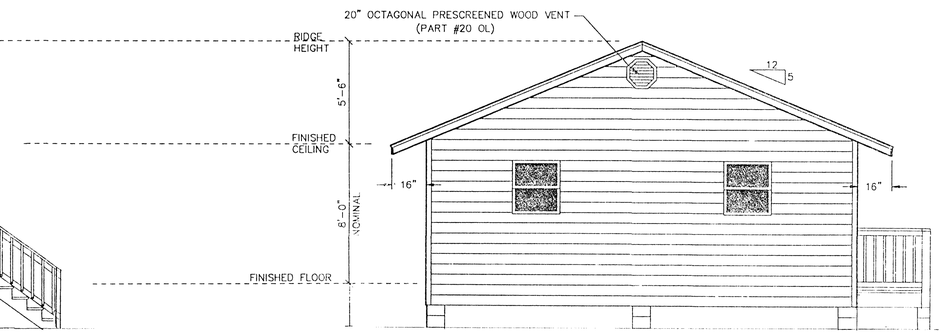

REAR

E L E V A T I O N S (REVERSE)

SCALE: 1/4" = 1'-0"

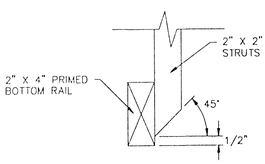

DETAIL 1
SCALE: 3" = 1'-0"

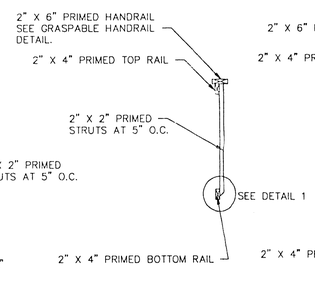

SECTION

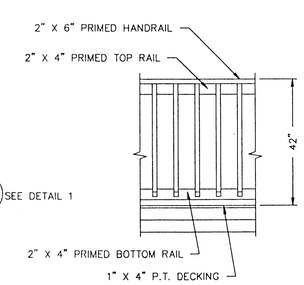

ELEVATION

PORCH RAILING DETAIL

SCALE: 1/2" = 1'-0"

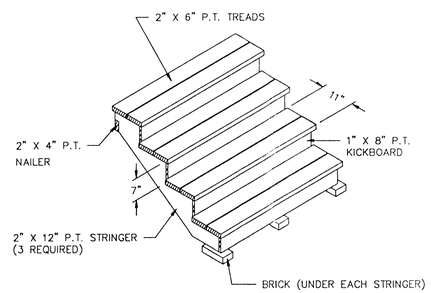

TYPICAL STEP DETAIL

NOTES: 1) THE SUM OF TWO (2) AND ONE (1) TREAD TO BE AT LEAST 24" AND NO MORE THAN 25".
2) THE QUANTITY OF TREADS AND RISERS MAY VARY DUE TO THE TERRAIN.

NO SCALE

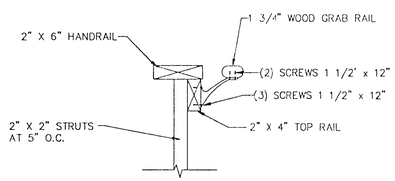

GRASPABLE HANDRAIL DETAIL

(BY OWNER)

N.T.S.

(EXTERIOR GRABRAIL ONLY TO BE INSTALLED WHEN REQUIRED BY LOCAL BUILDING CODES)

- TO THE BEST OF THE ENGINEERS KNOWLEDGE AND BELIEF, THE STRUCTURAL PLANS AND SPECIFICATIONS COMPLY WITH THE STANDARD BUILDING CODE, SECTION 1606 FOR 110 mph WIND ZONE (1994 EDITION)
- THIS DRAWING AND DESIGN IS VALID FOR 12 MONTHS AFTER THE DATE IT IS SIGNED AND SEALED.
- SIGNED AND SEALED FOR THE STRUCTURAL PORTION OF THIS DRAWING ONLY

THE SAN ANTONIO

© COPYRIGHT JIM WALTER HOMES, INC. 1987

1500 N. DALE MABRY HWY., TAMPA, FL.

SHEET 4

MAR 20 1996

ROOF DIAPHRAGM NAILING SCHEDULE – 110 mph ZONE

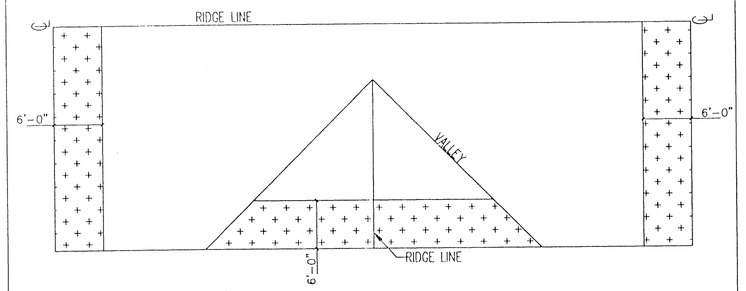

8d RING SHANK OR
10d COMMON NAILS @ 6" O/C -- 4" O/C @ GABLE ENDWALL OR GABLE TRUSS

8d COMMON NAILS @ 6" O/C EDGES

NOTE:
1) SEE STRUCTURAL NOTES FOR SHEATHING SPECIFICATIONS.
2) END JOINTS OF THE ROOF SHEATHING SHALL BE STAGGERED AND OCCUR OVER FRAMING MEMBER.

UPLIFT CONNECTION CROSS-REFERENCE***

SIMPSON STRONG TIE			HUGHES MANUFACTURING, INC.			SOUTHEASTERN METALS MFG.		
CONNECTOR	CAPACITY	FASTENERS	CONNECTOR	CAPACITY	FASTENERS	CONNECTOR	CAPACITY	FASTENERS
ETA12	580	5 – 10d x 1 1/2"	TA12	500	5 – 10d x 1 1/2"	TAPR28	720	5 – 10d x 3"
ETA16	725	8 – 10d x 1 1/2"	TA16	601	7 – 10d x 1 1/2"	TAPR210	865	6 – 10d x 3"
ETA20	1160	10 – 10d x 1 1/2"	TA20	902	9 – 10d x 1 1/2"	TAPR212	1153	8 – 10d x 3"
HETA20	1845	16 – 10d x 1 1/2"	LPTA	1500	15 – 10d x 1 1/2"	TAPR216	1585	11 – 10d x 3"
H2.5	394	10 – 8d x 1 1/2"	HGUH / RH	494	8 – 8d x 1 1/2"	HCPR – HGPL	520	(8) 8d
H5	432	8 – 8d x 1 1/2"	HCUH / RH	494	8 – 8d x 1 1/2"	HCPR – HCPL	520	(8) 8d
H7	884	14 – 8d x 1 1/2"	NO COMPARABLE CONNECTOR			NO COMPARABLE CONNECTOR		
MTT28B	3787	24 – 10d x 3"	NO COMPARABLE CONNECTOR			NO COMPARABLE CONNECTOR		
MAS	990	6 – 10d x 1 1/2"	MS	950	8 – 10d x 1 1/2"	FA-3	940	6 – 10d x 1 1/2"
HD2A *	2775	5/8"ø BOLTS	AD28 *	3265	3 – 5/8"ø BOLTS	ADS-2	3165	3 – 5/8"ø BOLTS
HD5A *	3705	3/4"ø BOLTS	AD58 *	4385	3 – 3/4"ø BOLTS	ADS-5	4265	3 – 3/4"ø BOLTS
HD6A *	4405	7/8"ø BOLTS	AD7A *	8050	2 – 7/8"ø 1 – 1 1/8"ø BOLTS	ADS-7	7900	2 – 7/8"ø 1 – 1 1/8"ø BOLTS
LUS26	935 / 1045 **	8 – 10d x 3"	JHA213	861 / 2854	(18) 16d / (3) 10d	NO COMPARABLE CONNECTOR		
HUS26	1550 / 3205 **	20 – 16d x 3 1/2"	EHUH26	1438 / 3000	(20) 16d / (10) 10d x 1 1/2"	NO COMPARABLE CONNECTOR		
HUS28	2000 / 3775 **	30 – 16d x 3 1/2"	EHUH28	2013 / 4200	(28) 16d / (14) 10d x 1 1/2"	NO COMPARABLE CONNECTOR		
A35	500	12 – 8d x 1 1/2"	FA6	580	12 – 8d x 1 1/2"	FAP18	731	(6) 8d
MTS12	1000	14 – 10d x 3"	RT12TW	605	(8) 16d x 3 1/2"	RTP16812	910	(6) 16d x 3 1/2"
MTS16	1000	14 – 10d x 3"	RT16TW	906	(12) 16d x 3 1/2"	RTP16816	1172	(8) 16d x 3 1/2"
MTS20	1000	14 – 10d x 3"	RT20TW	1208	(16) 16d x 3 1/2"	RTP18820	1172	(8) 16d x 3 1/2"

* MINIMUM 3" MEMBER
** REACTIONS ARE FOR ROOF LOADS ONLY
*** DO NOT DRIVE NAILS THROUGH THE TRUSS PLATE ON THE OPPOSITE SIDE OF THE TRUSS, WHICH COULD FORCE THE PLATE OFF OF THE TRUSS

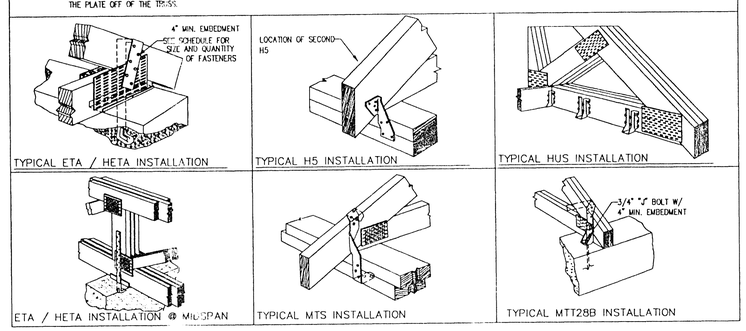

STRUCTURAL NOTES

1) CODES:
1.1 STANDARD BUILDING CODE CONGRESS INTERNATIONAL (1991).
1.2 BUILDING CODE REQUIREMENTS FOR REINFORCED CONCRETE (ACI 318-89).
1.3 AMERICAN SOCIETY OF CIVIL ENGINEERS MINIMUM DESIGN LOADS FOR BUILDINGS AND OTHER STRUCTURES (ASCE 7-88).
1.4 SPECIFICATION FOR THE DESIGN, FABRICATION AND ERECTION OF STRUCTURAL STEEL FOR BUILDINGS (AISC 9TH EDITION).
1.5 "DESIGN SPECIFICATION FOR LIGHT METAL PLATE CONNECTED WOOD TRUSSES" BY THE TRUSS PLATE INSTITUTE (TPI) 1985 EDITION.

2) DESIGN CRITERIA:
2.1 DWELLING FLOORS – 40 PSF LIVE LOAD.
2.2 BALCONIES – 60 PSF LIVE LOAD.
2.3 WALKWAYS – 80 PSF LIVE LOAD.
2.4 ROOF OVER LIVING AREAS – 30 PSF LIVE LOAD, 17 PSF (7 PSF T/C & 10 PSF B/C) DEAD LOAD FOR SHINGLE ROOFS; 25 PSF (15 PSF T/C & 10 PSF B/C) DEAD LOAD FOR CONCRETE TILE ROOFS.
2.5 WIND – 100 MPH, PER SBCCI UNLESS NOTED OTHERWISE.
2.6 NET UPLIFT DEAD LOADS 10 PSF SHINGLE; 15 PSF TILE.

3) SOIL:
3.1 MINIMUM ALLOWABLE SOIL PRESSURE 2000 PSF.

4) CONCRETE:
4.1 CONCRETE COMPRESSIVE STRENGTH AT 28 DAYS: 2500 PSI (NORMAL WEIGHT).
4.2 REINFORCING BARS: ASTM A615 (GRADE 60).
4.3 WELDED WIRE FABRIC (WWF): ASTM A185.
4.4 DETAIL REINFORCEMENT IN ACCORDANCE WITH ACI 315.
4.5 CONCRETE COVERAGE OF REINFORCEMENT: FOOTINGS 3" BOTTOM AND SIDES.
4.6 EARTH SUPPORTED SLABS: (INCLUDING EXTERIOR WALK AND DRIVE SLABS) 3 1/2" THICK MIN., REINFORCED WITH 6X6 – W1.4 X W1.4 WWF AT MID-DEPTH OF SLAB. FIBERMESH MAY BE USED IN LIEU OF WWF AT CONTRACTOR'S OPTION.
4.7 CONCRETING OPERATIONS SHALL COMPLY WITH ACI STANDARDS.
4.8 LAP SPLICE SHALL BE AS FOLLOWS: #5 BAR 25", #4 BAR 20", #3 BAR 15".

5) MASONRY:
5.1 DESIGN AND CONSTRUCTION SHALL CONFORM TO THE SPECIFICATION OF THE NATIONAL CONCRETE MASONRY ASSOCIATION AND ACI 530.
5.2 MINIMUM MASONRY UNIT STRENGTH: f'm 1350 PSI.
5.3 MORTAR SHALL BE TYPE S.
5.4 ALL BLOCK CELLS AND CAVITIES BELOW GRADE SHALL BE FILLED WITH CONCRETE WHEN STEM WALL IS GREATER THAN 24" TALL ABOVE GRADE.
5.5 FILL CELLS W/ (1) #5 BAR SHALL BE LOCATED @ 10'- 0" O/C MAX, AT EACH CORNER AND EACH SIDE OF OPENINGS GREATER THAN OR EQUAL TO 6'-0".
5.6 LINTELS SUPPLIED BY APPROVED MANUFACTURER:
1) FECP/CAST-CRETE CORPORATION
2) POWER CONCRETE
3) ALLIED PRECAST
4) LOTT

6) WOOD:
6.1 WOOD STRUCTURAL FRAMING MEMBERS: #2 SOUTHERN YELLOW PINE (UNLESS NOTED OTHERWISE) WITH AN ALLOWABLE BENDING STRESS (Fb) PER NDS-91 = 1250 PSI AND A MODULUS OF ELASTICITY = 1,600,000 PSI EXCEPT STUDS WHERE SPF STUD OR CONSTRUCTION GRADE MAY BE USED.
6.2 DESIGN, FABRICATE AND ERECT WOOD TRUSSES IN ACCORDANCE WITH THE "DESIGN SPECIFICATION FOR LIGHT METAL PLATE CONNECTED WOOD TRUSSES" BY THE TRUSS PLATE INSTITUTE, 1985 EDITION, HIB-91 AND QST-88.
6.3 ALL EXPOSED WOOD OR WOOD IN CONTACT WITH EARTH OR CONCRETE TO BE PRESSURE TREATED.
6.4 ROOF SHEATHING: (APA RATED EXPOSURE 1) 1/2" PLYWOOD OR 7/16" OSB MINIMUM SHINGLES OR TILE
6.5 UNTREATED WOOD SHALL NOT BE IN DIRECT CONTACT WITH CONCRETE. SEAT PLATES SHALL BE PROVIDED AT BEARING LOCATIONS WITHOUT WOODEN TOP PLATES.

7) MICRO-LAM LUMBER:
7.1 MICRO-LAM STRESS GRADES SHALL PROVIDE THE FOLLOWING MINIMUM PROPERTIES:
E = 2,000,000 PSI
Fb = 2,800 PSI
Ft = 1,850 PSI
Fc = 500 PSI (PERPENDICULAR)
Fc = 2,700 PSI (PARALLEL)
Fv = 285 PSI

"L" BRACING REQUIREMENTS

STUD SPACING	NO "L" BRACE	(1) 2"x4" "L" BRACE	(2) 2"x4" "L" BRACE	(2) 2"x6" "L" BRACE
16"	0'0" – 4'-5"	4'-5" – 8'-0"	8'-0" – 12'-0"	12'-0" – 16'-0"
24"	0'-0" – 4'-0"	4'-0" – 7'-0"	7'-0" – 10'-0"	10'-0" – 14'-0"

NOTE:
"L" BRACE MUST EXTEND AT LEAST 90% OF WEB LENGTH

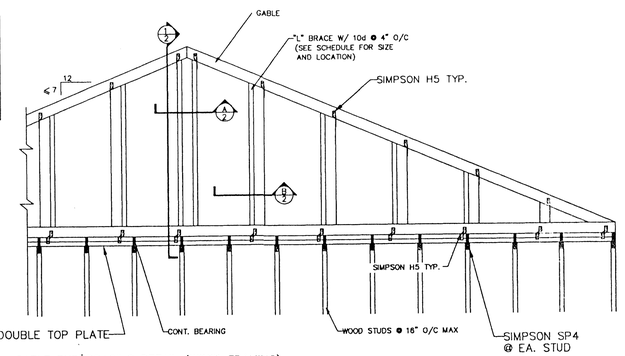

GABLE END BRACING DETAIL (WOOD FRAMING)
WIND SPEED 110 MPH, MEAN WALL HEIGHT UP TO 20'-0"
SCALE: 1/2"=1'-0"

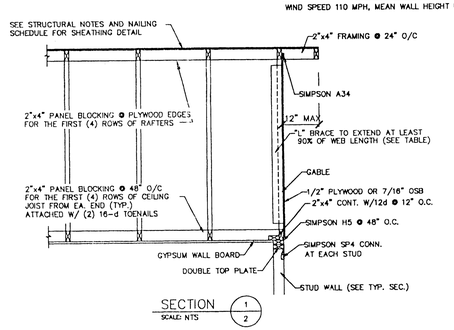

SECTION 1/2
SCALE: NTS

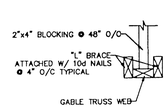

SECTION A/2
SCALE: NTS

DOUBLE "L" BRACING DETAIL

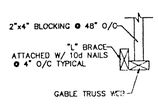

SECTION B/2
SCALE: NTS

SINGLE "L" BRACING DETAIL

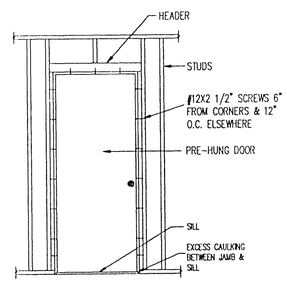

DOOR INSTALLATION
NTS

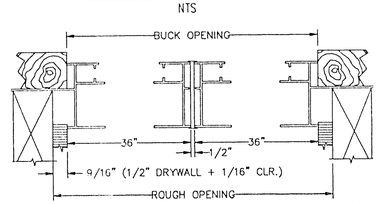

WINDOW FRAMES SHALL BE ATTACHED WITH 10d NAILS SPACED AT 8" O.C. STARTING WITHIN 4" OF CORNERS.

WINDOW INSTALLATION
NTS

- TO THE BEST OF THE ENGINEERS KNOWLEDGE AND BELIEF, THE STRUCTURAL PLANS AND SPECIFICATIONS COMPLY WITH THE STANDARD BUILDING CODE, SECTION 1606 FOR 110 mph WIND ZONE (1994 EDITION)
- THIS DRAWING AND DESIGN IS VALID FOR 12 MONTHS AFTER THE DATE IT IS SIGNED AND SEALED.
- SIGNED AND SEALED FOR THE STRUCTURAL PORTION OF THIS DRAWING ONLY

THE SAN ANTONIO

© COPYRIGHT JIM WALTER HOMES, INC. 1987

1500 N. DALE MABRY HWY., TAMPA, FL.

SHEET 5

MAR 20 1996

ELECTRICAL PACKAGE B – INSTALLED

LIGHT FIXTURES TO BE PROGRESS #4238-30 WHITE FINISH, METAL REFLECTOR, FROSTED GLASS, 12" DIA., 2 BULB BASE, OR EQUAL FOR BEDROOMS AND LIVING AREAS.
PROGRESS P3605-30 FOR WALK-IN CLOSETS AND UTILITY ROOMS; PROGRESS P3408-11 FOR HALLWAYS AND BATHROOMS; AND PROGRESS P5818-30 FOR EXTERIOR LOCATIONS. ALL ELECTRICAL MATERIALS AND DEVICES TO BE U.L. LISTED.

THIS PACKAGE DOES NOT INCLUDE ELECTRICAL OPTION #1 BUT THIS OPTION MAY BE PURCHASED SEPARATELY.

ELECTRICAL PACKAGE C – INSTALLED

CONSISTS OF ABOVE "ELECTRICAL PACKAGE B – INSTALLED", ELECTRICAL OPTION #1; ELECTRICAL OPTION #4; ELECTRICAL OPTION #5 ONE ADDITIONAL BATH; ELECTRICAL OPTION #6 AND ELECTRICAL OPTION #8 ONE ADDITIONAL BATH.

NOTE: OPTION #5 AND OPTION #8 COME STANDARD ON BATH WITHOUT WINDOW.

NOTE FOR ELECTRICAL SUBCONTRACTORS: ELECTRICAL SUBCONTRACTORS MUST PROVIDE MATERIALS AND INSTALLATION WHICH WILL COMPLY WITH LOCAL CODE REQUIREMENTS.

IMPORTANT

THE ELECTRICAL METER BASE WILL BE INSTALLED AS INSTRUCTED BY THE POWER COMPANY OR AT THE CLOSEST POINT ON THE HOUSE TO THE POWER SOURCE (EXCEPT ON THE FRONT). THE ELECTRICAL PANEL WILL BE INSTALLED AT THE CLOSEST POINT TO THE METER BASE (OTHER THAN IN THE LIVING ROOM).

REQUEST FOR ELECTRICAL SERVICE FROM ELECTRIC UTILITY COMPANY IS THE RESPONSIBILITY OF THE CUSTOMER.

ELECTRICAL SYMBOL LEGEND

SYMBOL	DESCRIPTION
	120V DUPLEX RECEPTACLE
G.F.C.I.	120/ GROUND FAULT CIRCUIT INTERRUPTER DUPLEX RECEPTACLE
W.P.	120V WEATHER PROOF DUPLEX RECEPTACLE
	240V CIRCUIT
$	TOGGLE SWITCH
S.D.	SMOKE DETECTOR
P.C.	PULL CHAIN LIGHT SOCKET
	LIGHT SOCKET
	OUTSIDE LIGHT SOCKET
	EXHAUST FAN

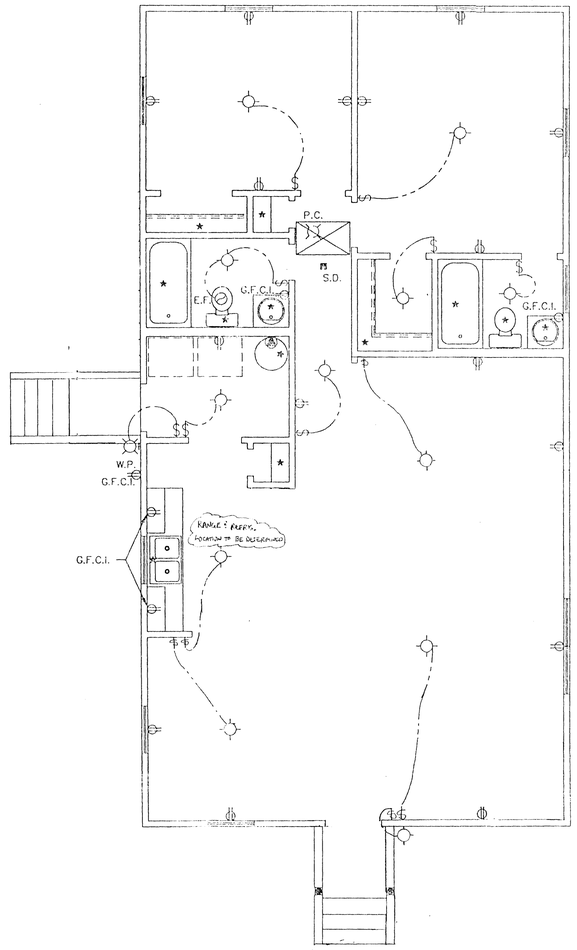

ELECTRICAL PACKAGE B PLAN (REVERSE)

(OPTIONAL ITEM – APPLICABLE ONLY IF PURCHASED) SCALE: 1/4" = 1'-0"

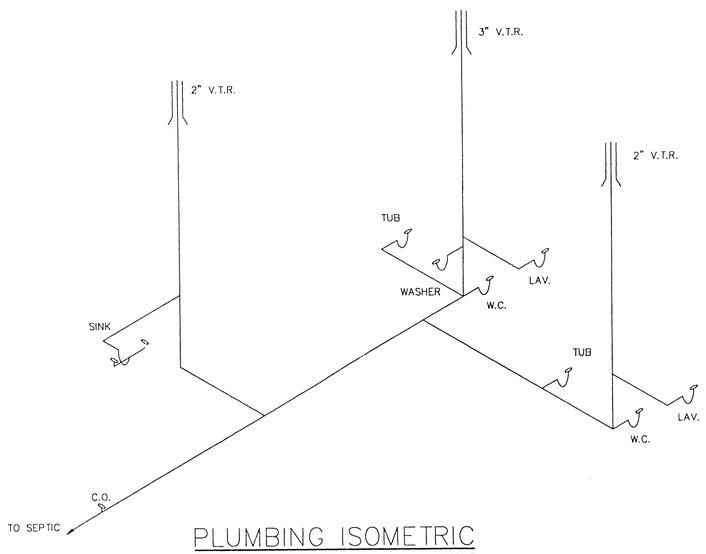

PLUMBING ISOMETRIC

NOTE: CLEANOUTS AS REQUIRED. NO SCALE

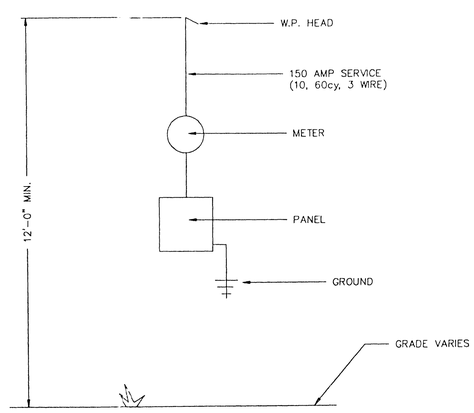

ELECTRICAL SERVICE DIAGRAM

NO SCALE

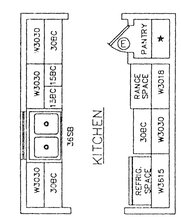

DELUXE KITCHEN OPTION

(OPTIONAL ITEM – APPLICABLE ONLY IF PURCHASED) SCALE: 1/4" = 1'-0"

THE SAN ANTONIO

© COPYRIGHT JIM WALTER HOMES, INC. 1987
1500 N. DALE MABRY HWY., TAMPA, FL.

SHEET 6