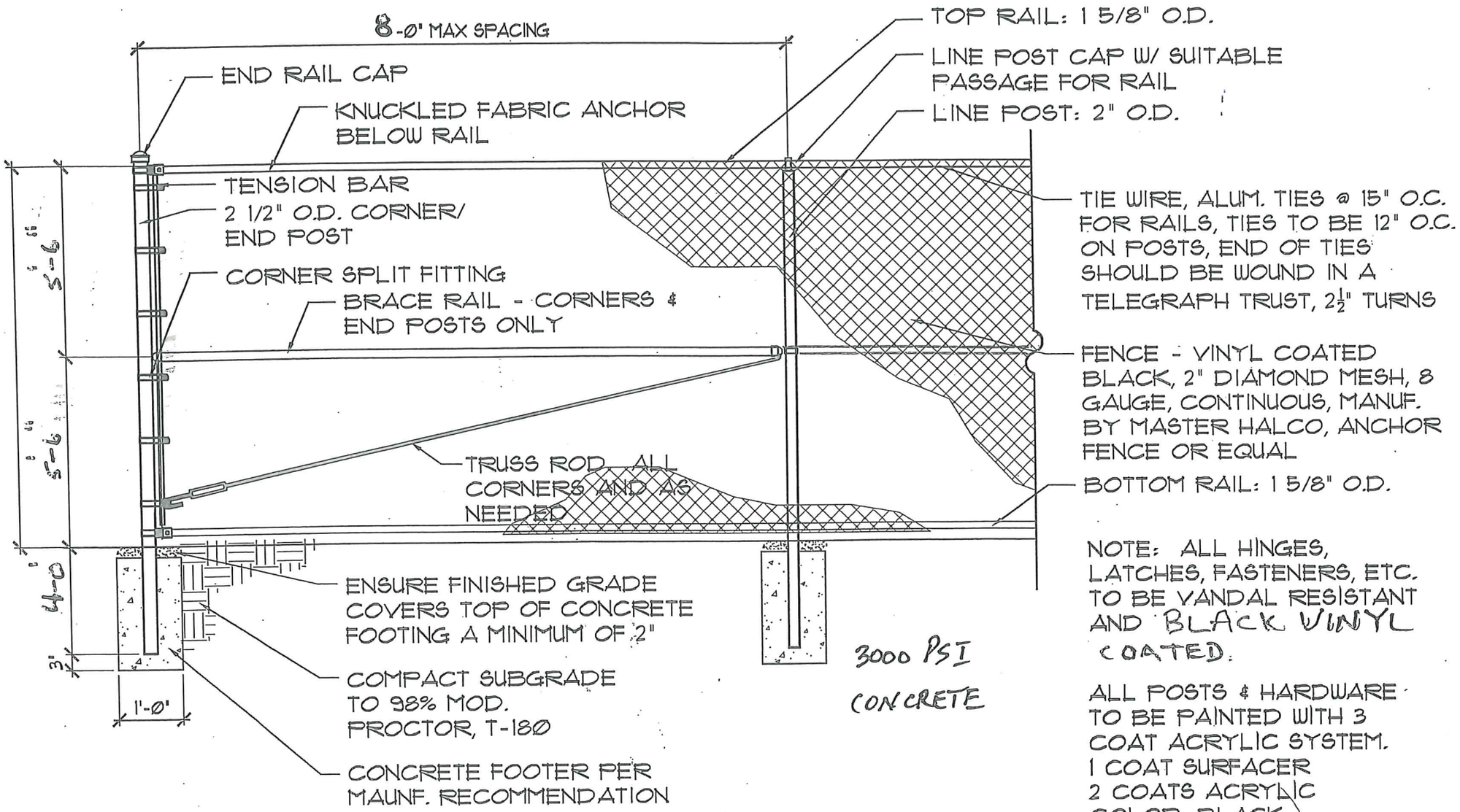

NOTE: ALL HINGES, LATCHES, FASTENERS, ETC. TO BE VANDAL RESISTANT AND BLACK VINYL COATED.

ALL POSTS & HARDWARE TO BE PAINTED WITH 3 COAT ACRYLIC SYSTEM.
1 COAT SURFACER
2 COATS ACRYLIC
COLOR: BLACK

' CHAINLINK FENCE DETAIL

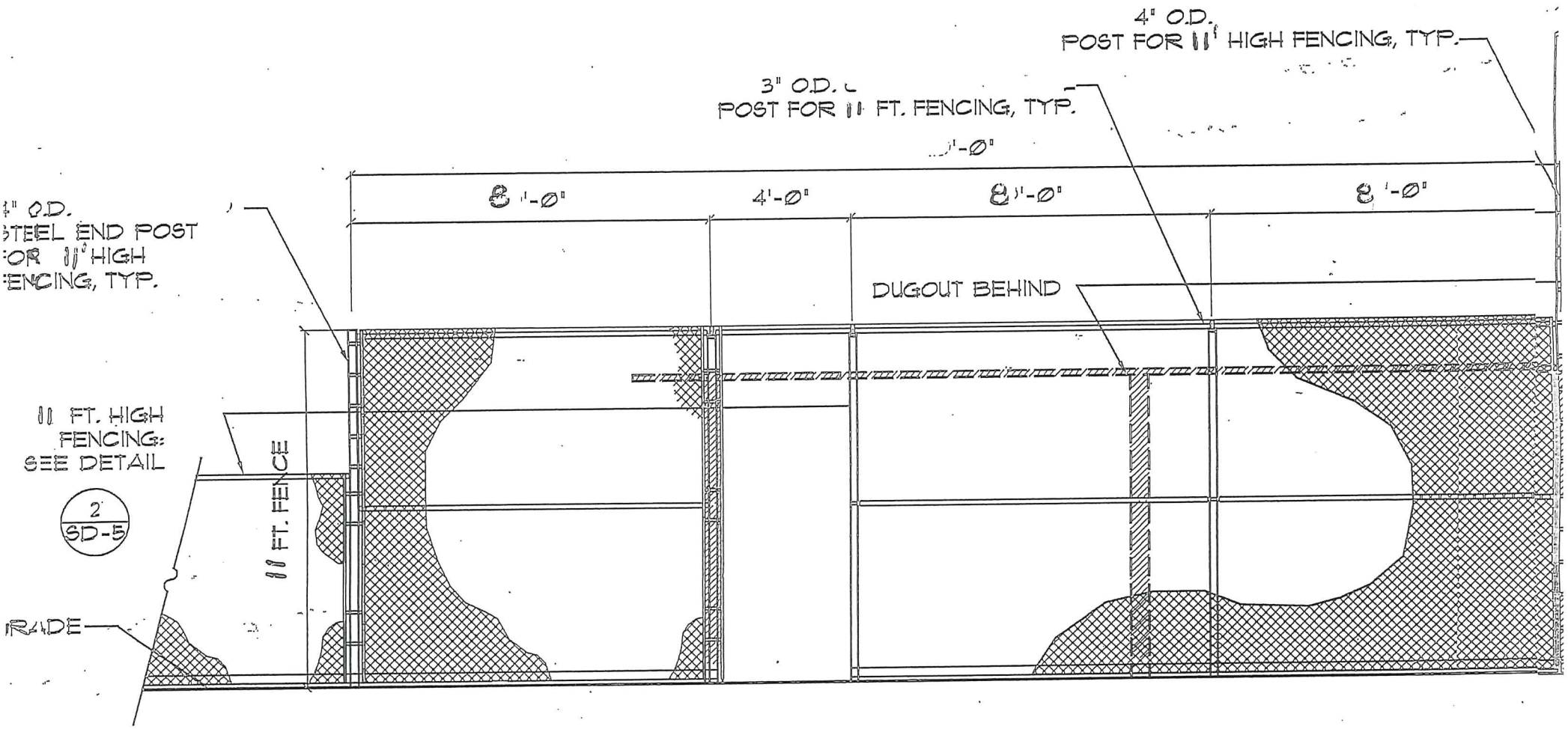

1
SD-5

CHAIN LINK FENCE FROM BASEBALL DUGOUT TO BACKSTOP DETAIL

FABRIC WIDTHS

HEIGHT OF FENCE	WIDTH OF BOTTOM FABRIC	WIDTH OF TOP FABRIC
3'-6" - 4'-0"	3'-6" - 4'-0"	0
6'-0"	6'-0"	0
8'-0"	8'-0"	0
10'-0"	10'-0"	0
12'-0"	8'-0"	4'-0"
14'-0"	10'-0"	4'-0"
16'-0"	10'-0"	6'-0"
18'-0"	10'-0"	8'-0"
20'-0"	10'-0"	10'-0"

PIPE SCHEDULE

NOMINAL OUTSIDE DIAMETER	ACTUAL OUTSIDE DIAMETER
1⅝"	1.660
2"	2.375
2½"	2.875
3"	3.500
3½"	4.000
4"	4.500
4½"	5.000

BOLT AND FABRIC NOTES

PEEN END OF ALL BOLTS.

BOLTS WHICH ARE INSTALLED 6' OR LESS ABOVE GRADE SHALL NOT PROTUDE MORE THAN 1/4" BEYOND THE NUT AFTER TIGHTENING. ALL ROUGH EDGES SHALL BE FILED SMOOTH TO THE SATISFACTION OF THE ENGINEER.

ON FENCES OVER 12 FEET HIGH WHERE THE TWO WIDTHS OF FABRIC ARE REQUIRED, THE BOTTOM PIECE SHALL BE KNUCKLED TOP AND BOTTOM AND THE TOP PIECE KNUCKLED AT BOTTOM AND BARBED AT TOP.

THE TWO PIECES SHALL BE SPLICED IN SUCH A WAY AS TO GIVE A FINISHED NEAT APPEARANCE.

FABRIC TO BE KNUCKLED AT TOP AND BOTTOM RAILS ON FENCES UP TO AND INCLUDING 6'-0" HIGH AND BARBED AT TOP RAIL ON FENCES OVER 6'-0" HIGH.

SCHEDULE OF SIZES OF MEMBERS - AS PER ASTM A 53, ALL SIZES NPS

HEIGHT OF FENCE	DIAMETER OF LINE POSTS	POST SPACING MAXIMUM	CORNER & END POST	TOP RAIL	MID RAILS	BOTTOM RAIL	DEPTH OF POST INTO CURB AND FTG AT:		HORIZONTAL BRACES AT CORNER & END POST	DIAGONAL BRACES
							LINE POST	END/CORNER/ GATE POST		
3'-6" & 4'-0"	2"	6'-0"	2½"	1⅝"	0	1⅝"	1'-0"	1'-0"	0	0
6'-0"	2"	6'-0"	2½"	1⅝"	0	1⅝"	1'-8"	1'-8"	0	½" DIA.
8'-0"	2½"	8'-0"	3"	1⅝"	0	1⅝"	1'-8"	1'-8"	1 AT 1⅝"	½" DIA.
10'-0"	3"	10'-0"	4"	1⅝"	1 - 1⅝"	1⅝"	3'-2"	3'-2"	2 AT 1⅝"	½" DIA.
12'-0"	3"	10'-0"	4"	1⅝"	1 - 1⅝"	1⅝"	3'-2"	4'-2"	2 AT 1⅝"	½" DIA.
14'-0"	3½"	10'-0"	4"	1⅝"	2 - 1⅝"	1⅝"	3'-2"	4'-2"	2 AT 1⅝"	½" DIA.
16'-0"	3½"	10'-0"	4"	1⅝"	2 - 1⅝"	1⅝"	3'-2"	4'-2"	2 AT 1⅝"	½" DIA.
18'-0"	3½"	10'-0"	4"	1⅝"	2 - 1⅝"	1⅝"	3'-2"	4'-2"	2 AT 1⅝"	½" DIA.
20'-0"	4½"	10'-0"	4½"	1⅝"	3 - 1⅝"	1⅝"	4'-2"	4'-6"	3 AT 1⅝"	½" DIA.

1 10'-0" HIGH CHAIN LINK FENCE*

SCALE: 1"=1'-0"

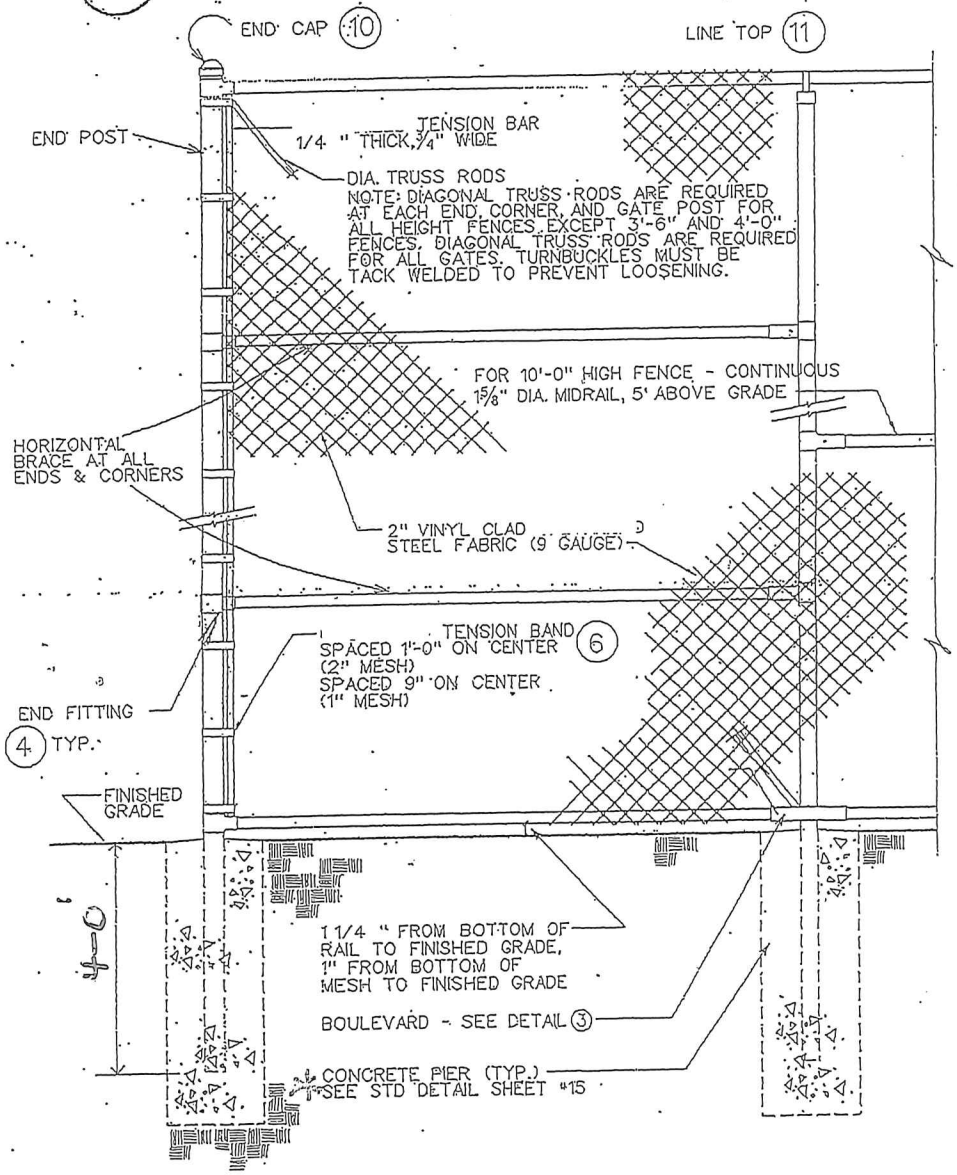

* FOR OTHER HEIGHT FENCES, SEE SCHEDULE BELOW

2 CORNER FITTING

SCALE: HALF SCALE

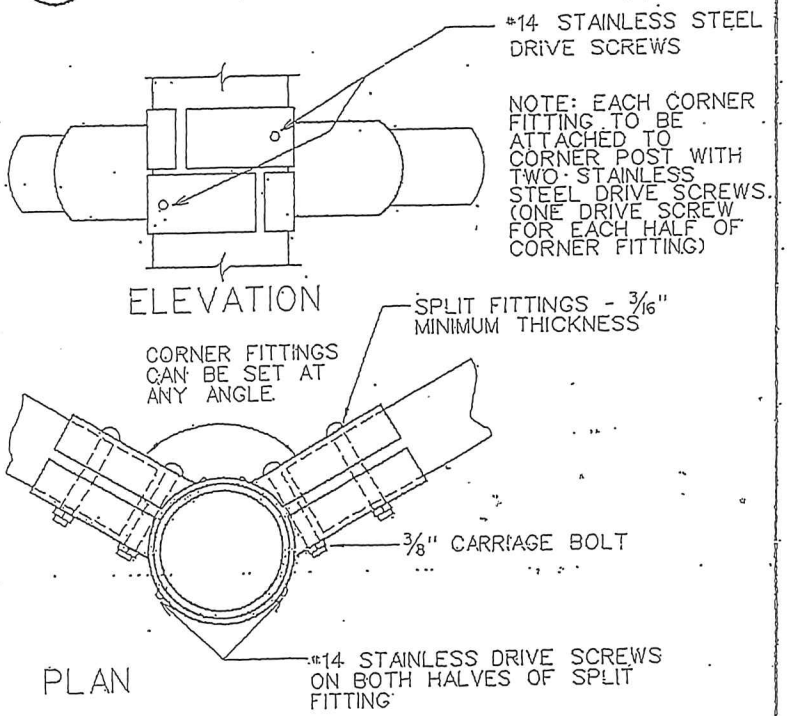

3 BOULEVARD
SCALE: HALF SCALE

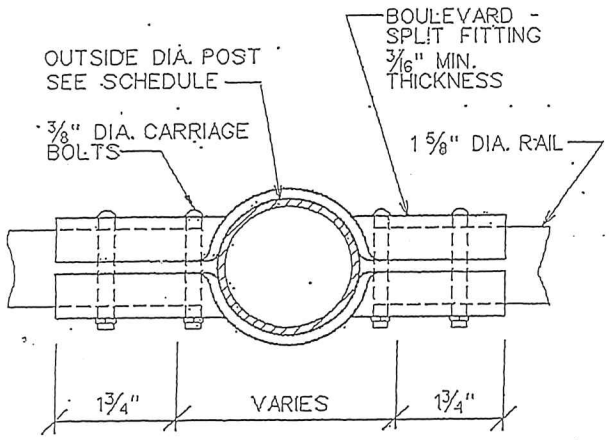

PLAN

ALL CORNERS TO BE ROUNDED

NOTE:

A=1 3/4" FOR 2" - 4 1/2" O.D. POST

B=1 5/8" FOR 2" O.D. OR SMALLER POST

C=2 1/2" NOM. O.D. OR LARGER - 2 BOLTS REQUIRED

4 END FITTING
SCALE: HALF SCALE

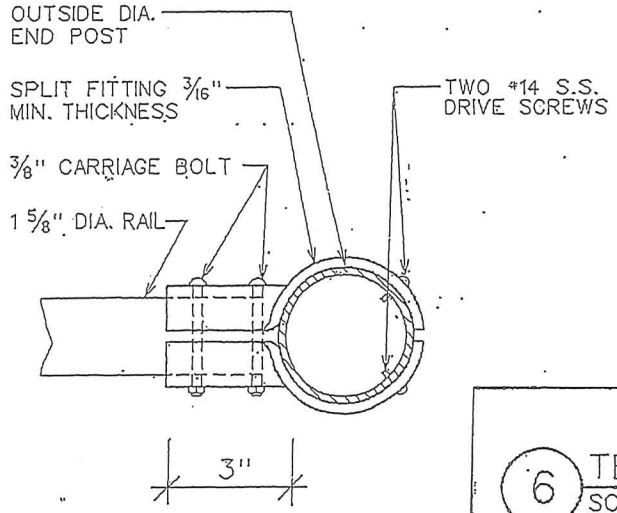

PLAN

NOTE: MINIMUM WIDTH OF END FITTING TO BE 2 1/4"

5 TOP RAIL COUPLING
SCALE: HALF SCALE

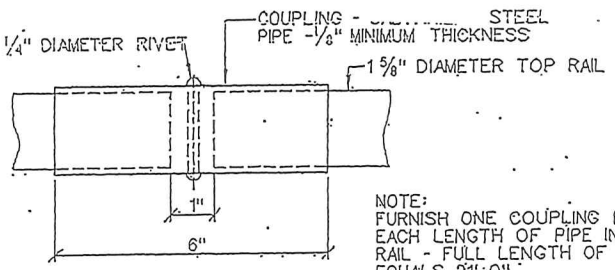

ELEVATION

NOTE:
FURNISH ONE COUPLING FOR EACH LENGTH OF PIPE IN TOP RAIL - FULL LENGTH OF PIPE EQUALS 21'-0"

6 TENSION MEMBERS
SCALE: HALF SCALE

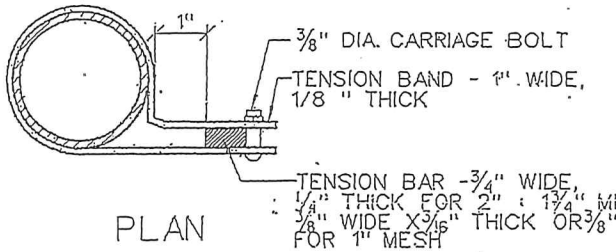

PLAN

7 CORNER SPLIT FITTING
SCALE: 3"=1'-0"

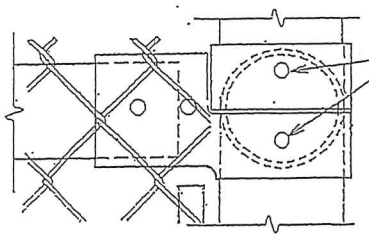

ELEVATION

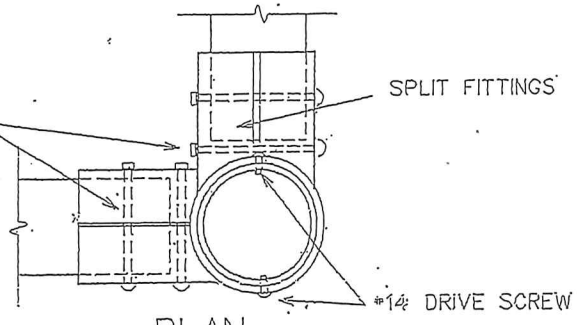

PLAN

8 SMALL POST CAP

SCALE: FULL SCALE

WALL THICKNESS 3/16" THROUGHOUT

NOTE: POST CAP IS TO BE OF MALLEABLE IRON OR PRESSED STEEL.

CAP TOP FOR 3'-6" AND 4'-0" HIGH FENCE TO BE A SMOOTH "DOME" SHAPE. FOR 6'-0" HIGH FENCES, POST CAPS CAN BE "DOME" OR "BULLET" SHAPED.

POST CAP IS TO FIT SNUGLY OVER POST AND IS TO BE FIXED IN PLACE WITH TWO # 14 STAINLESS STEEL DRIVE OR SET SCREWS.

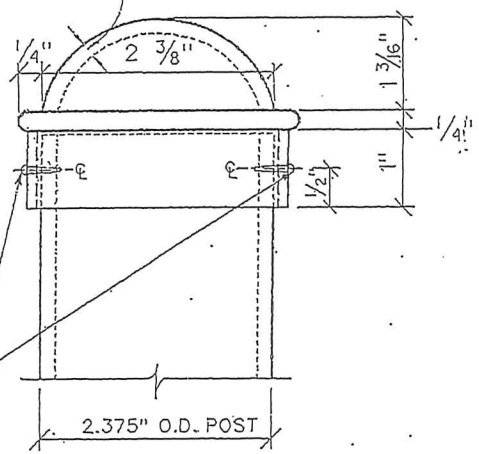

9 END, CORNER, & GATE POST CAP

SCALE: FULL SCALE

WALL THICKNESS 3/16" THROUGHOUT

NOTE: POST CAP IS TO BE OF MALLEABLE IRON.

FOR 4" OUTSIDE DIAMETER POST, POST CAP SHALL POSSESS DIMENSIONS THAT ARE IN PROPORTION TO DIMENSIONS BELOW FOR 2 1/8" OUTSIDE DIAMETER POST CAP.

CAP TOPS FOR 3" OUTSIDE DIA. AND 4" OUTSIDE DIA. POSTS ARE TO POSSESS A SMOOTH "BULLET" SHAPE. FOR 2 1/2" OUTSIDE DIA. POST CAP - SEE DETAIL 9

POST CAP IS TO FIT SNUGLY OVER POST AND IS TO BE FIXED IN PLACE WITH TWO # 14 STAINLESS STEEL DRIVE OR SET SCREWS.

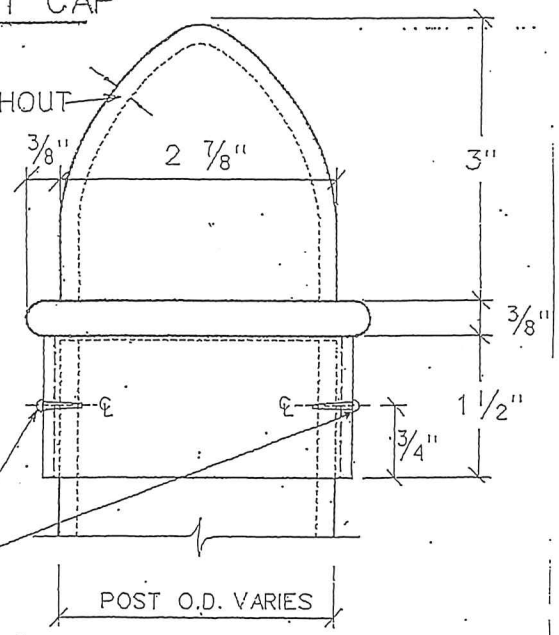

10 POST LINE TOP

SCALE: FULL SCALE

NOTE: WIDTH OF LINE TOP OVAL TO BE MINIMUM OF 5/8" AND A MAXIMUM OF 7/8". LINE TOP IS TO BE OF MALLEABLE IRON.

INSIDE OF LINE TOP OVAL IS TO BE ALIGNED WITH OUTSIDE WALL OF LINE POST. CHAIN LINK MESH MUST BE STRAIGHT FROM LINE POST TO TOP RAIL.

WALL THICKNESS TO BE 3/16" THROUGHOUT

1 5/8" DIA. TOP RAIL

POST CAP IS TO FIT SNUGLY OVER POST AND IS TO BE FIXED IN PLACE WITH TWO # 14 STAINLESS STEEL DRIVE OR SET SCREWS.

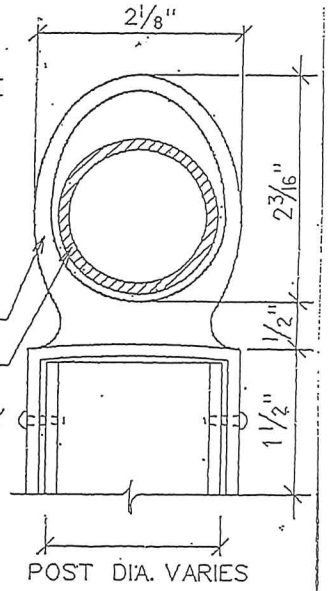

FILE NAME: fence-DD-nts

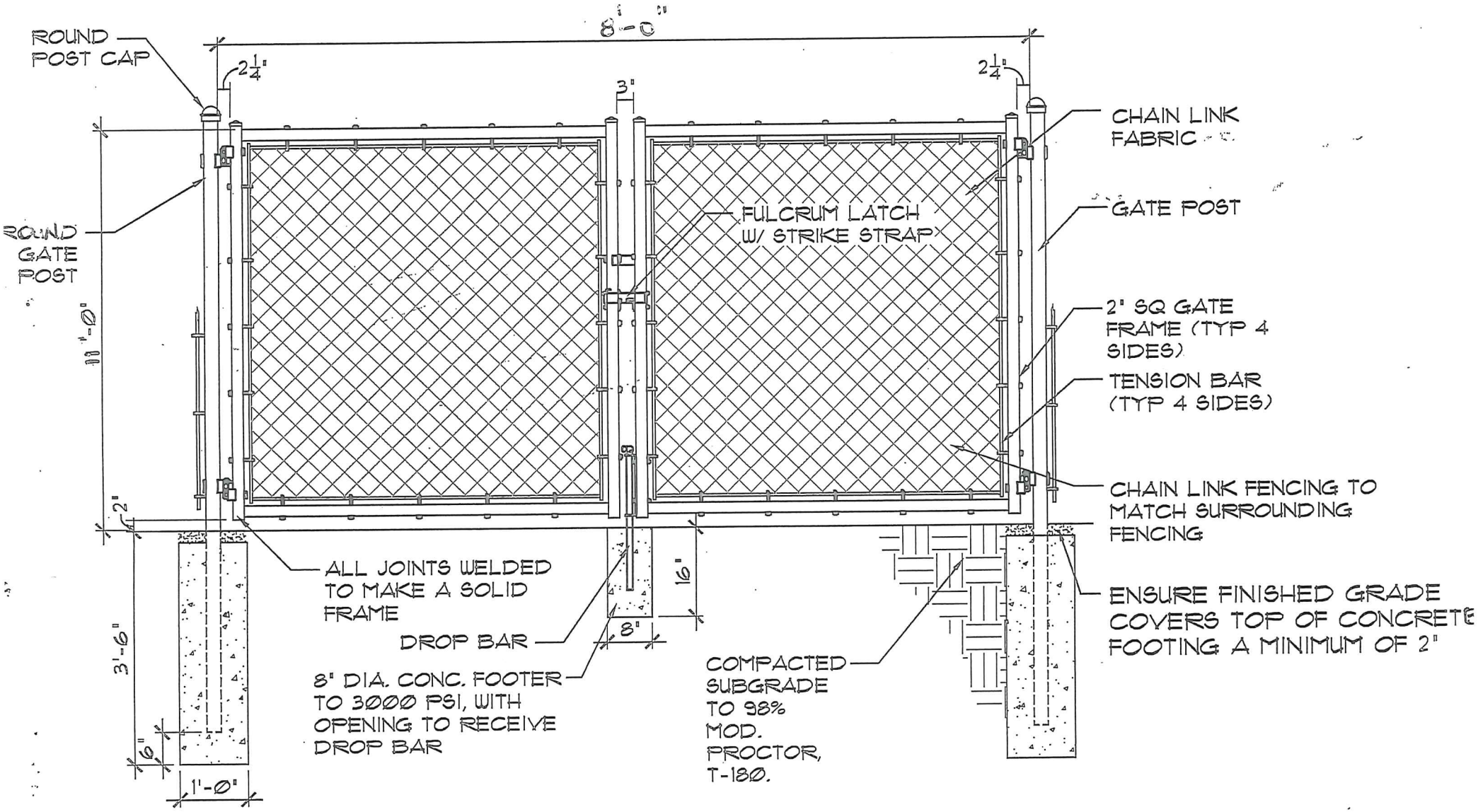

3
SD-5

CHAIN LINK GATE DETAIL

1/2" = 1'-0"

FILE NAME: fence gate

4
SD-

SOFTBALL

5#4

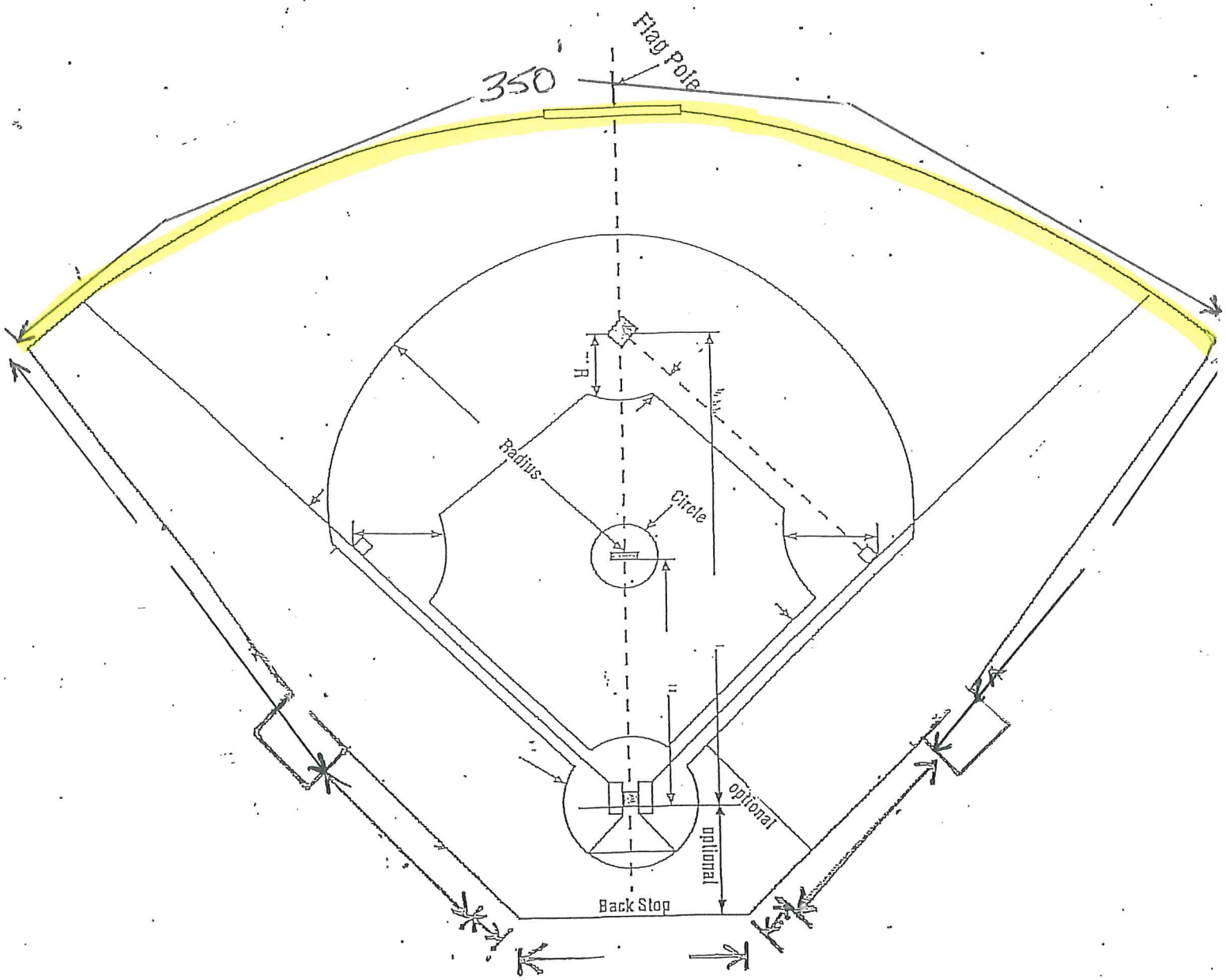

Minneola Athletic Complex

SOUTH LAKE COMMUNITY PARK

SITE DIRECTORY

- P Parking
- Restroom
- Pavilion
- Concession
- Path Lighting (Typical)
- Multi-Use Trail
- Exercise Station
- Playground
- Dog Park
- Batting Cages