Note: Sample only not painted

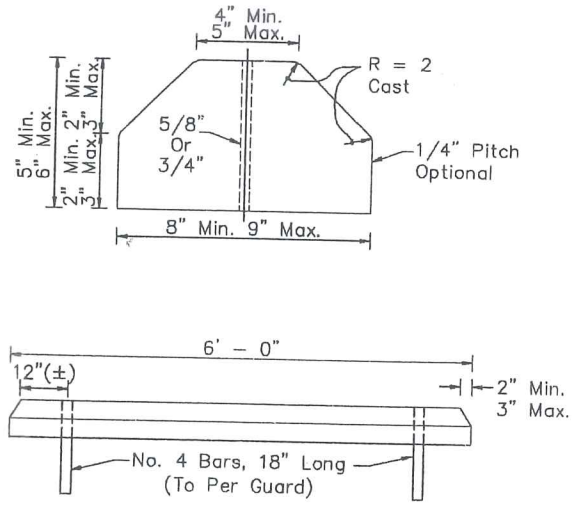

CONCRETE WHEEL STOP

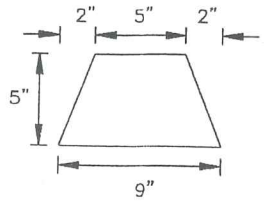

CONCRETE CURB
(NOT TO SCALE)