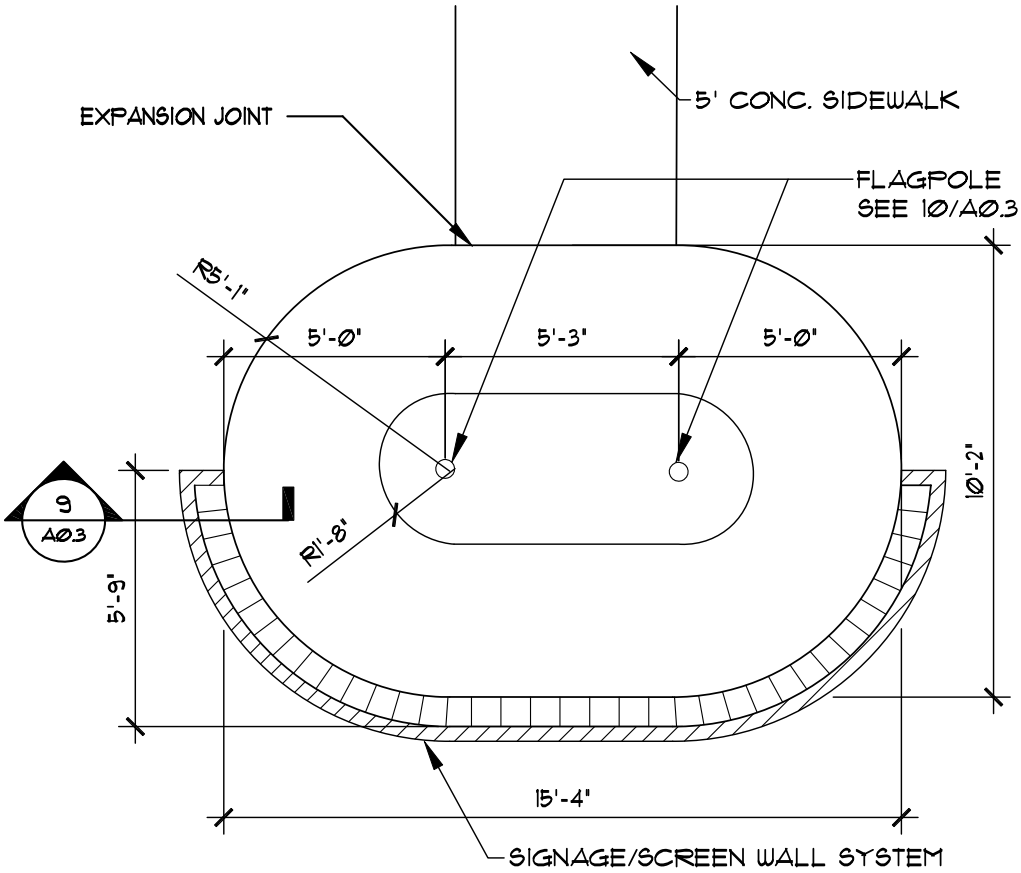

7
A0.3

SCREEN WALL - PLAN

SCALE: 1/4" = 1'-0"

Sarmer Ranaldi
Planning and Architecture Inc
820 West Broadway Stree, Suite 3000
Oviedo, Florida 32765
ph 407.977.1080 fx 407.977.1019

TITLE: SCREEN WALL PLAN		
PROJECT: PAISLEY FIRE STATION		
Project No.: 07010	SCALE: N.T.S.	
By: SRI	DATE: 03-17-09	

ADD # 2
A0-3.1

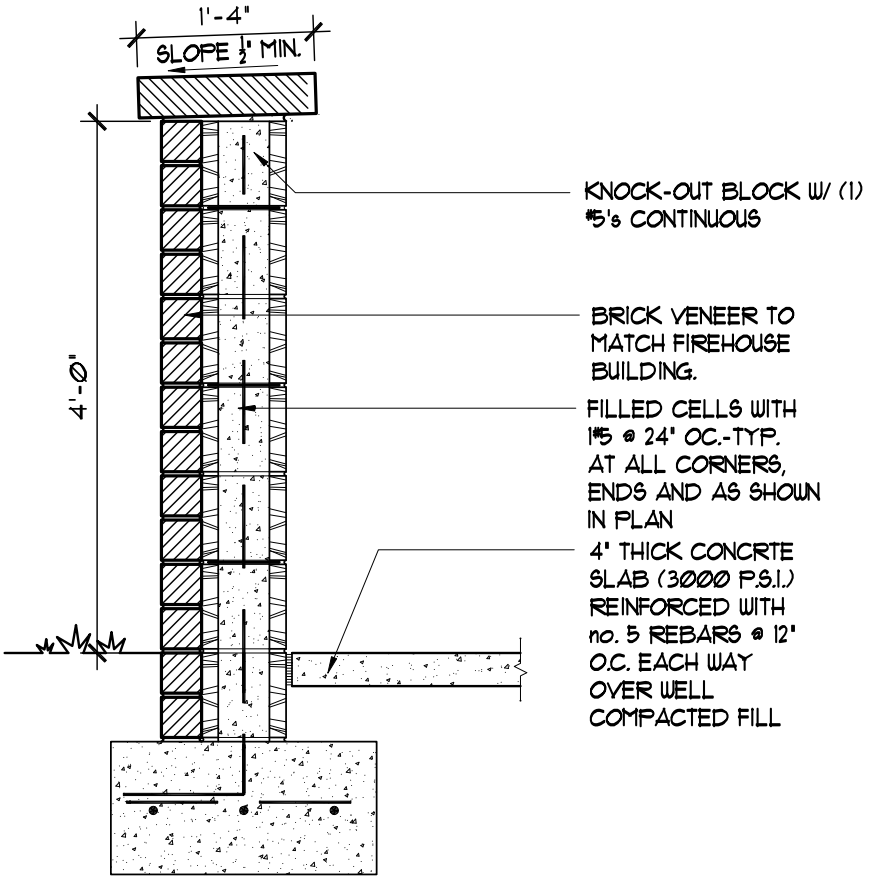

9 / A0.3 SCREEN WALL - SECTION

SCALE: NTS

Sarmer Ranaldi
Planning and Architecture Inc
820 West Broadway Stree, Suite 3000
Oviedo, Florida 32765
ph 407.977.1080 fx 407.977.1019

TITLE: SCREEN WALL SECTION	
PROJECT: PAISLEY FIRE STATION	
Project No.: 07010	SCALE: N.T.S.
By: SRI	DATE: 03-17-09

ADD # 2
A0-3.2

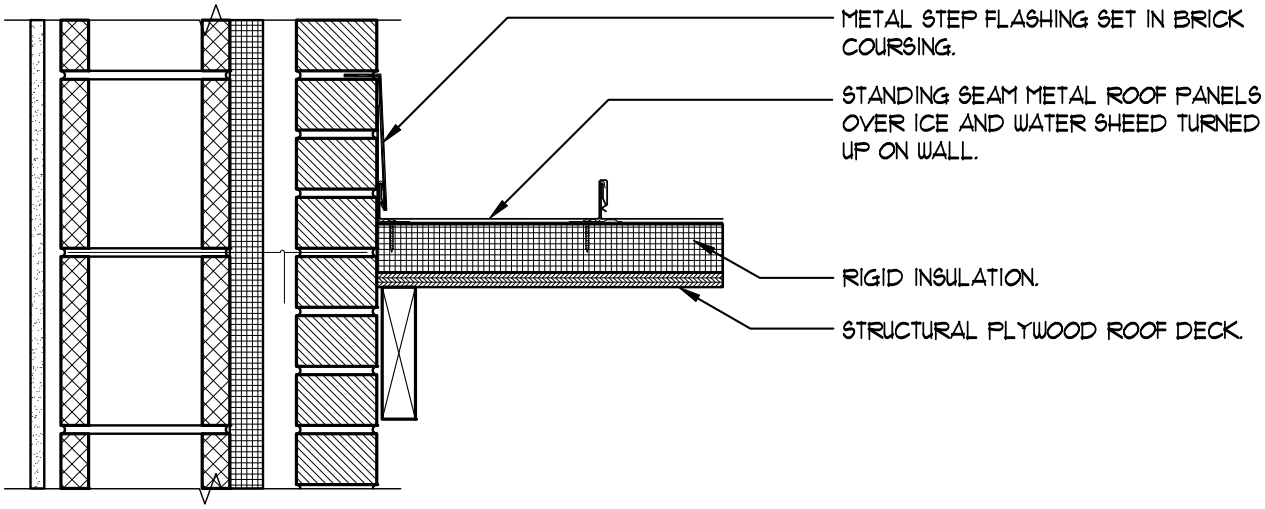

5 / A1.4 ROOF DETAIL

SCALE: NTS

Sarmer Ranaldi
Planning and Architecture Inc
820 West Broadway Stree, Suite 3000
Oviedo, Florida 32765
ph 407.977.1080 fx 407.977.1019

TITLE: ROOF DETAIL	
PROJECT: PAISLEY FIRE STATION	
Project No.: 07010	SCALE: N.T.S.
By: SRI	DATE: 03-17-09

ADD # 2
A1-4.3

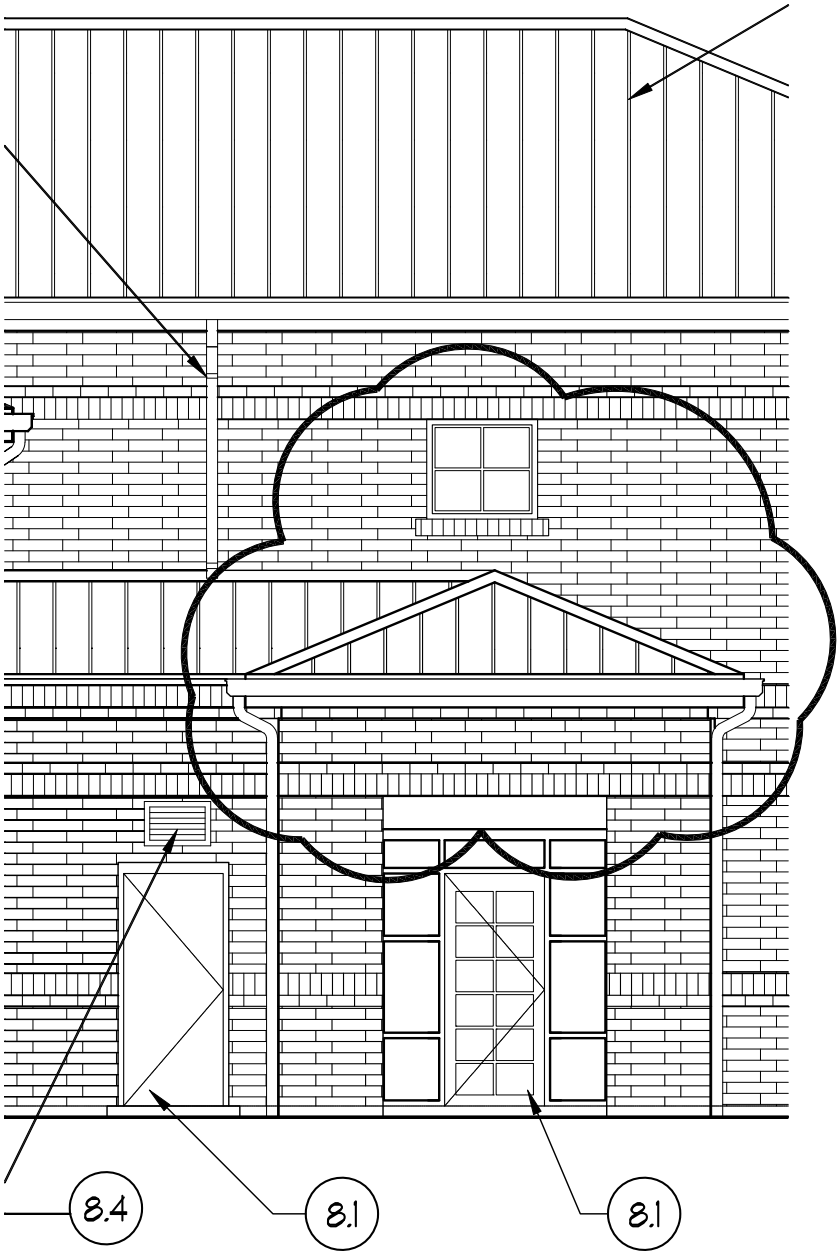

1
A2.1

WEST ELEVATION

SCALE: NTS

Sarmer Ranaldi
Planning and Architecture Inc
820 West Broadway Stree, Suite 3000
Oviedo, Florida 32765
ph 407.977.1080 fx 407.977.1019

TITLE: WEST ELEVATION	
PROJECT: PAISLEY FIRE STATION	
Project No.: 07010	SCALE: N.T.S.
By: SRI	DATE: 03-17-09

ADD # 2
A2-1.4

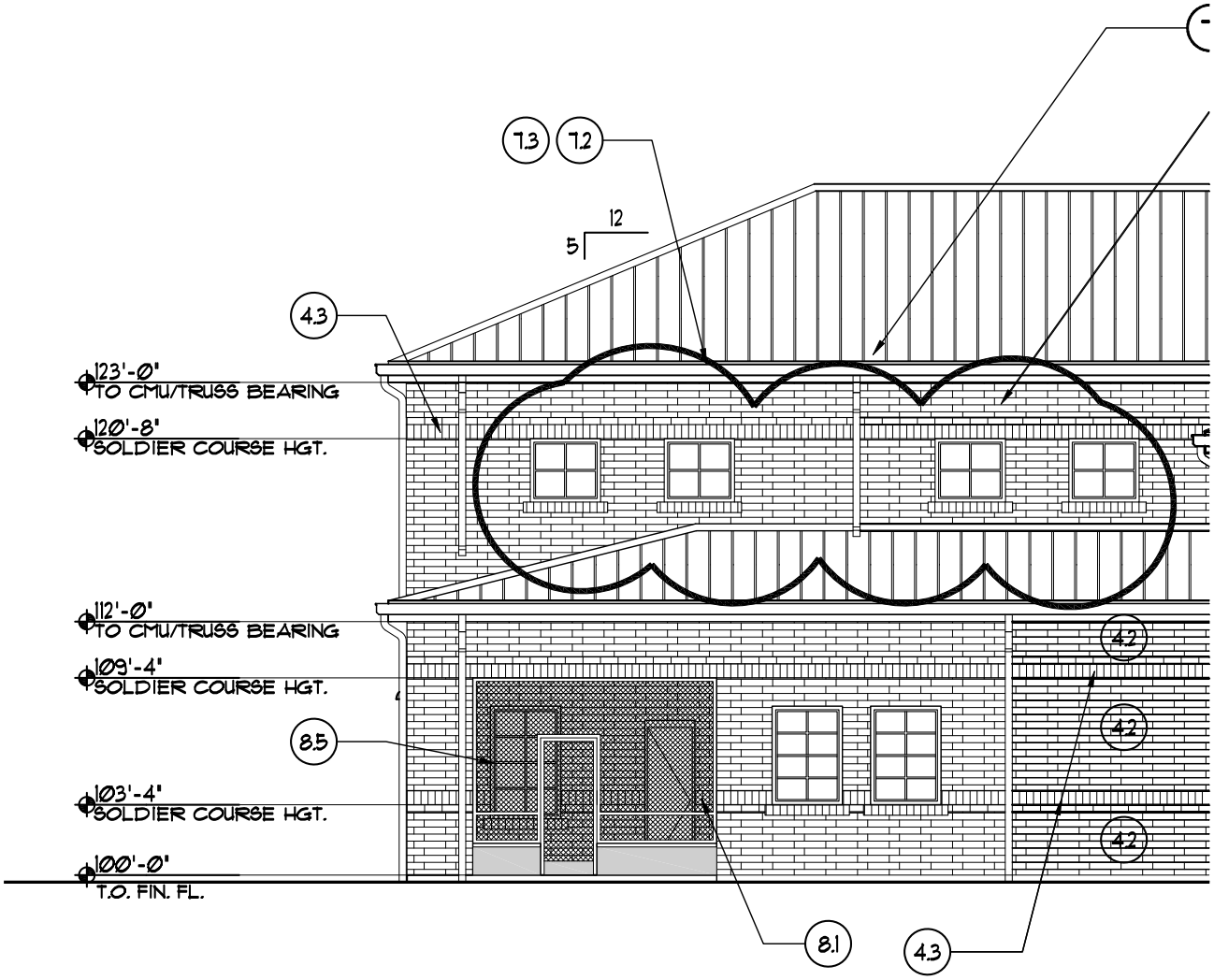

2 / A2.1

EAST ELEVATION

SCALE: NTS

Sarmer Ranaldi
Planning and Architecture Inc
820 West Broadway Stree, Suite 3000
Oviedo, Florida 32765
ph 407.977.1080 fx 407.977.1019

TITLE: EAST ELEVATION	
PROJECT: PAISLEY FIRE STATION	
Project No.: 07010	SCALE: N.T.S.
By: SRI	DATE: 03-17-09

ADD # 2
A2-1.5

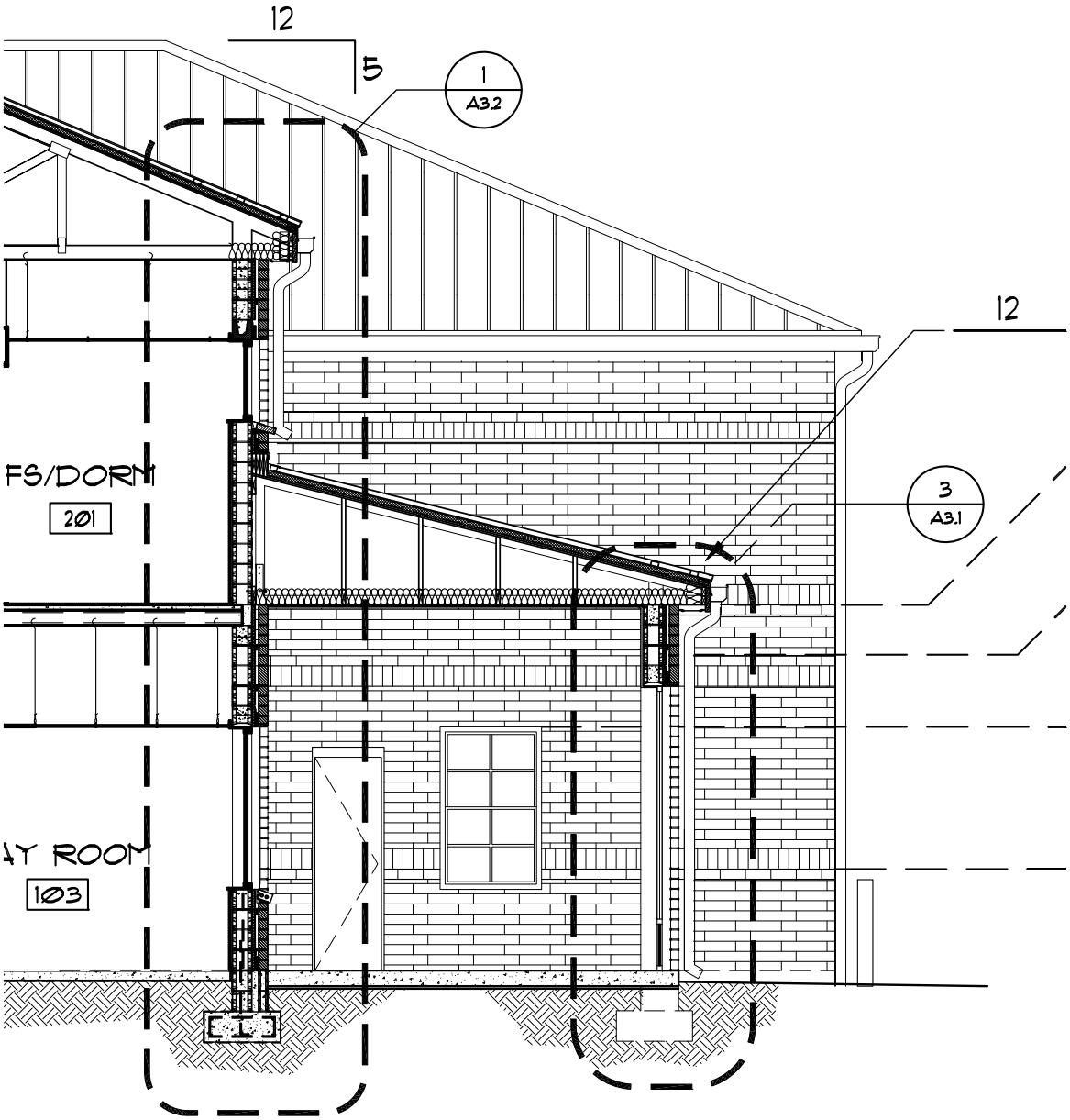

1 / A2.3 BUILDING SECTION

SCALE: NTS

Sarmer Ranaldi
Planning and Architecture Inc
820 West Broadway Stree, Suite 3000
Oviedo, Florida 32765
ph 407.977.1080 fx 407.977.1019

TITLE: BUILDING SECTION	
PROJECT: PAISLEY FIRE STATION	
Project No.: 07010	SCALE: N.T.S.
By: SRI	DATE: 03-17-09

ADD # 2

A2-3.6

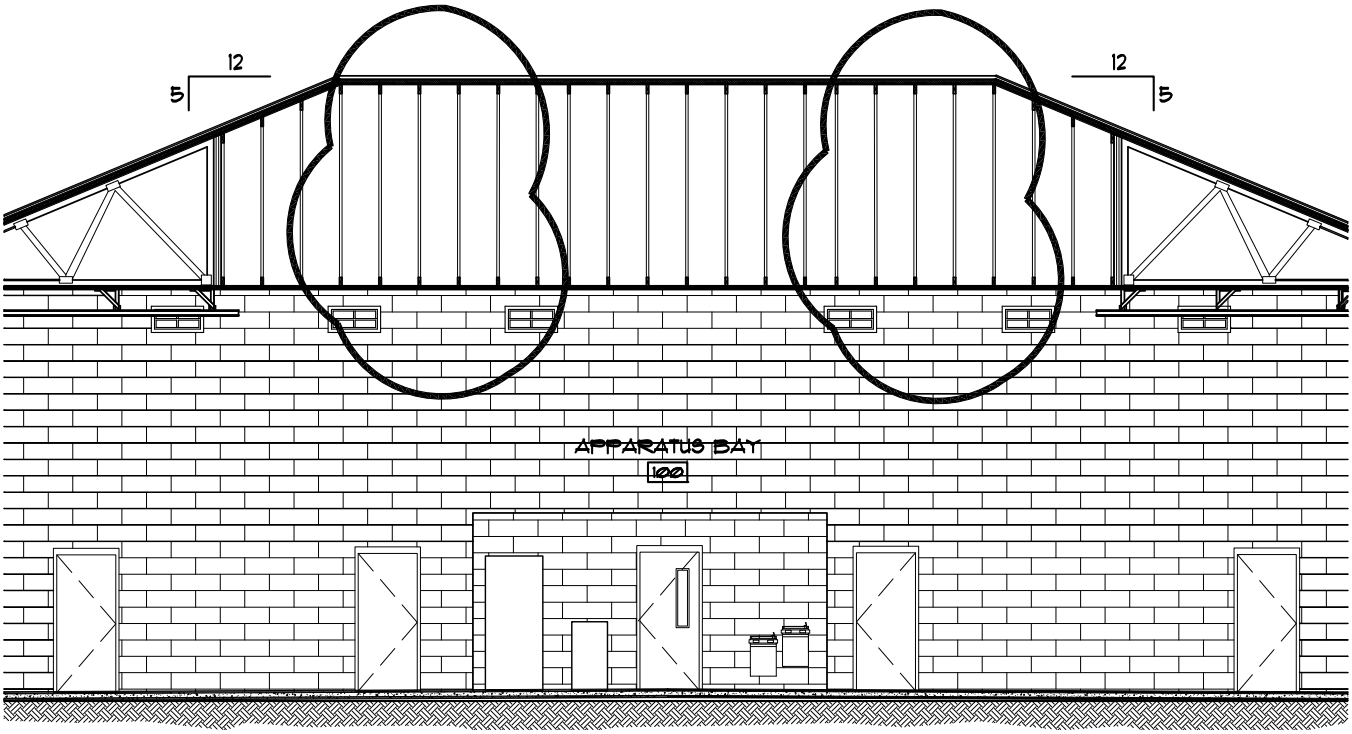

2
A2.3

BUILDING SECTION

SCALE: NTS

Sarmer Ranaldi
Planning and Architecture Inc
820 West Broadway Stree, Suite 3000
Oviedo, Florida 32765
ph 407.977.1080 fx 407.977.1019

TITLE: BUILDING SECTION	
PROJECT: PAISLEY FIRE STATION	
Project No.: 07010	SCALE: N.T.S.
By: SRI	DATE: 03-17-09

ADD # 2
A2-3.7

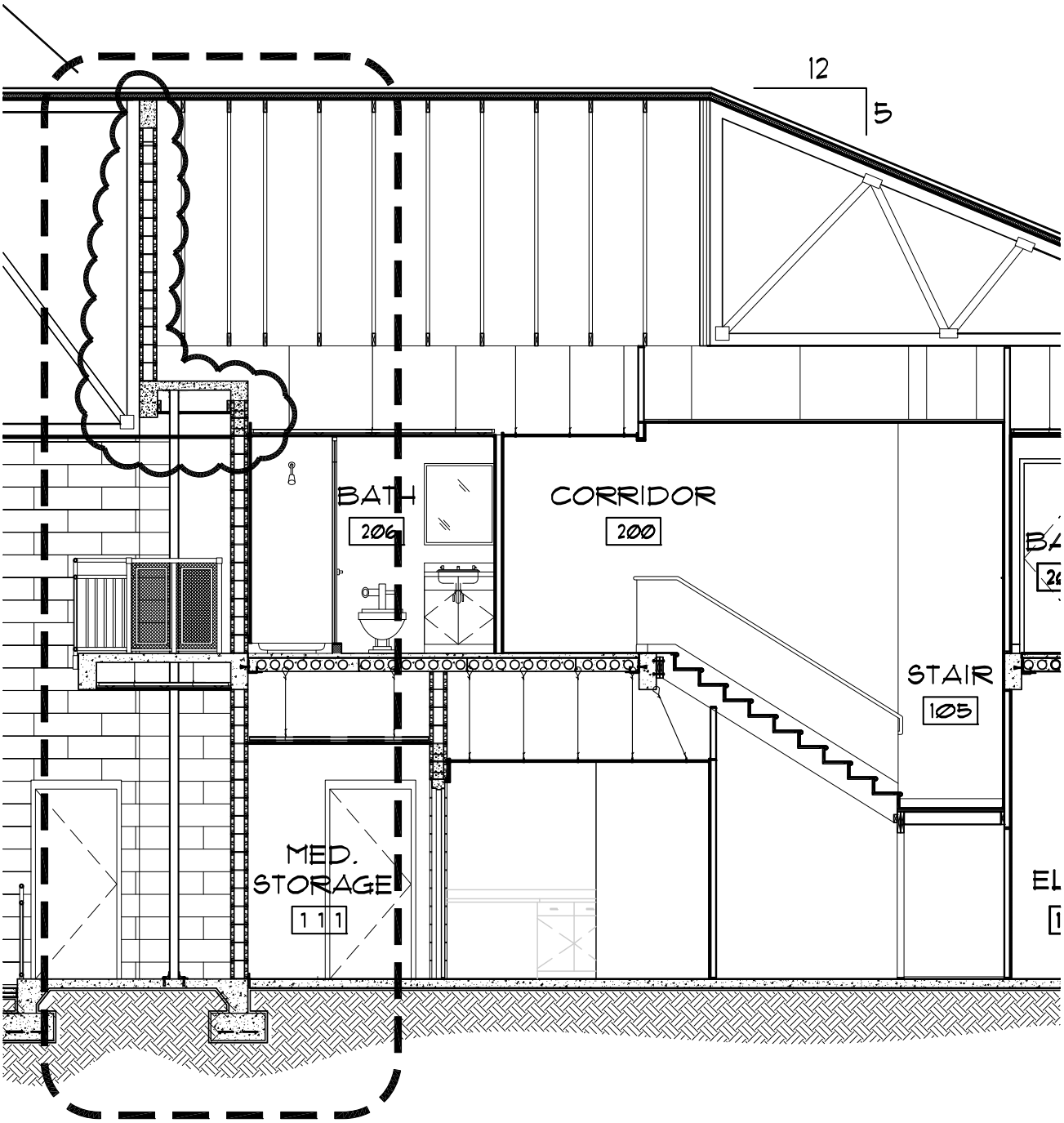

2
A2.4

BUILDING SECTION

SCALE: NTS

Sarmer Ranaldi
Planning and Architecture Inc
820 West Broadway Stree, Suite 3000
Oviedo, Florida 32765
ph 407.977.1080 fx 407.977.1019

TITLE: BUILDING SECTION	
PROJECT: PAISLEY FIRE STATION	
Project No.: 07010	SCALE: N.T.S.
By: SRI	DATE: 03-17-09

ADD # 2
A2-4.10

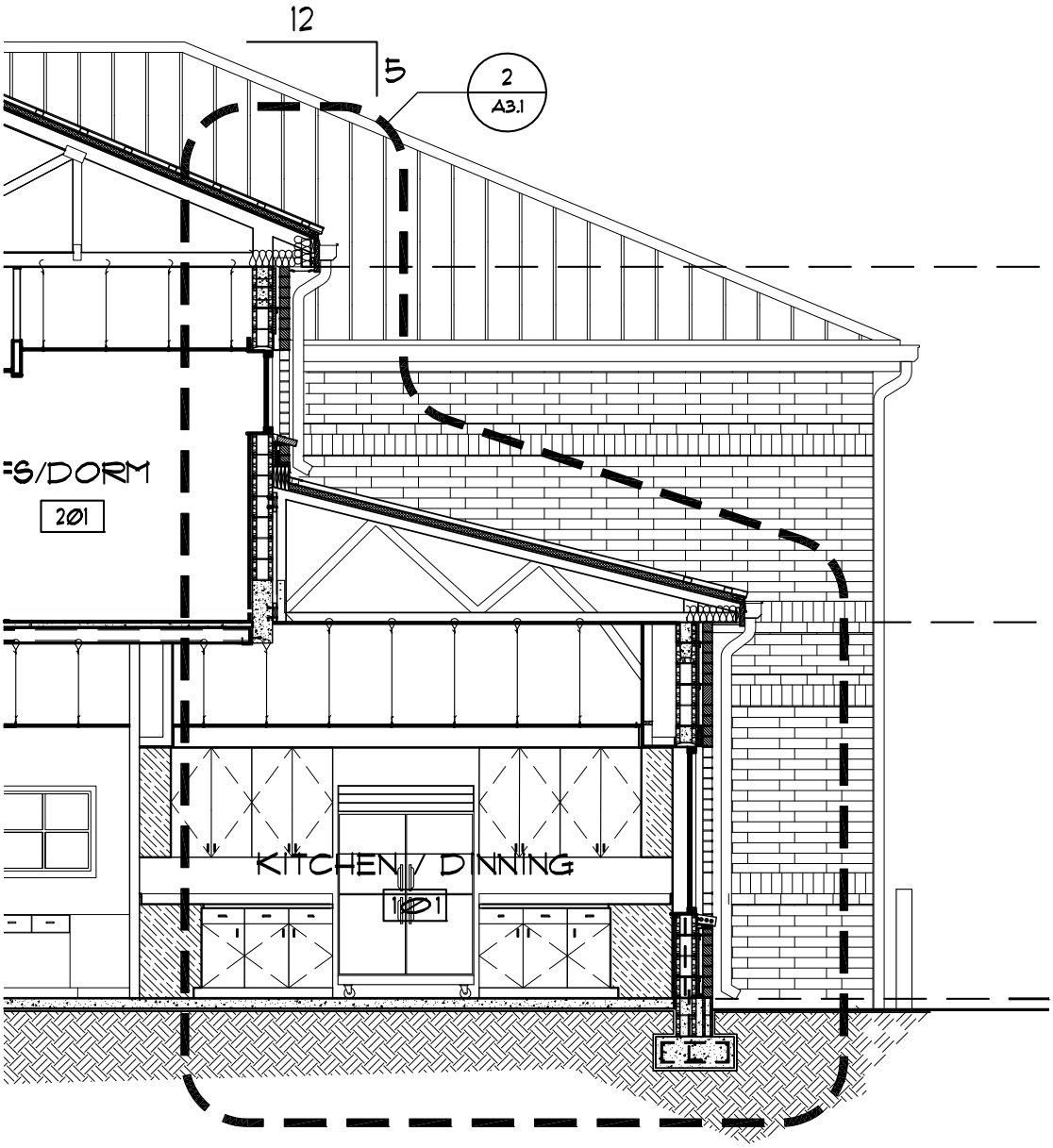

1 / A2.4 BUILDING SECTION

SCALE: NTS

Sarmer Ranaldi
Planning and Architecture Inc
820 West Broadway Stree, Suite 3000
Oviedo, Florida 32765
ph 407.977.1080 fx 407.977.1019

TITLE: BUILDING SECTION	
PROJECT: PAISLEY FIRE STATION	
Project No.: 07010	SCALE: N.T.S.
By: SRI	DATE: 03-17-09

ADD # 2

A2-4.9

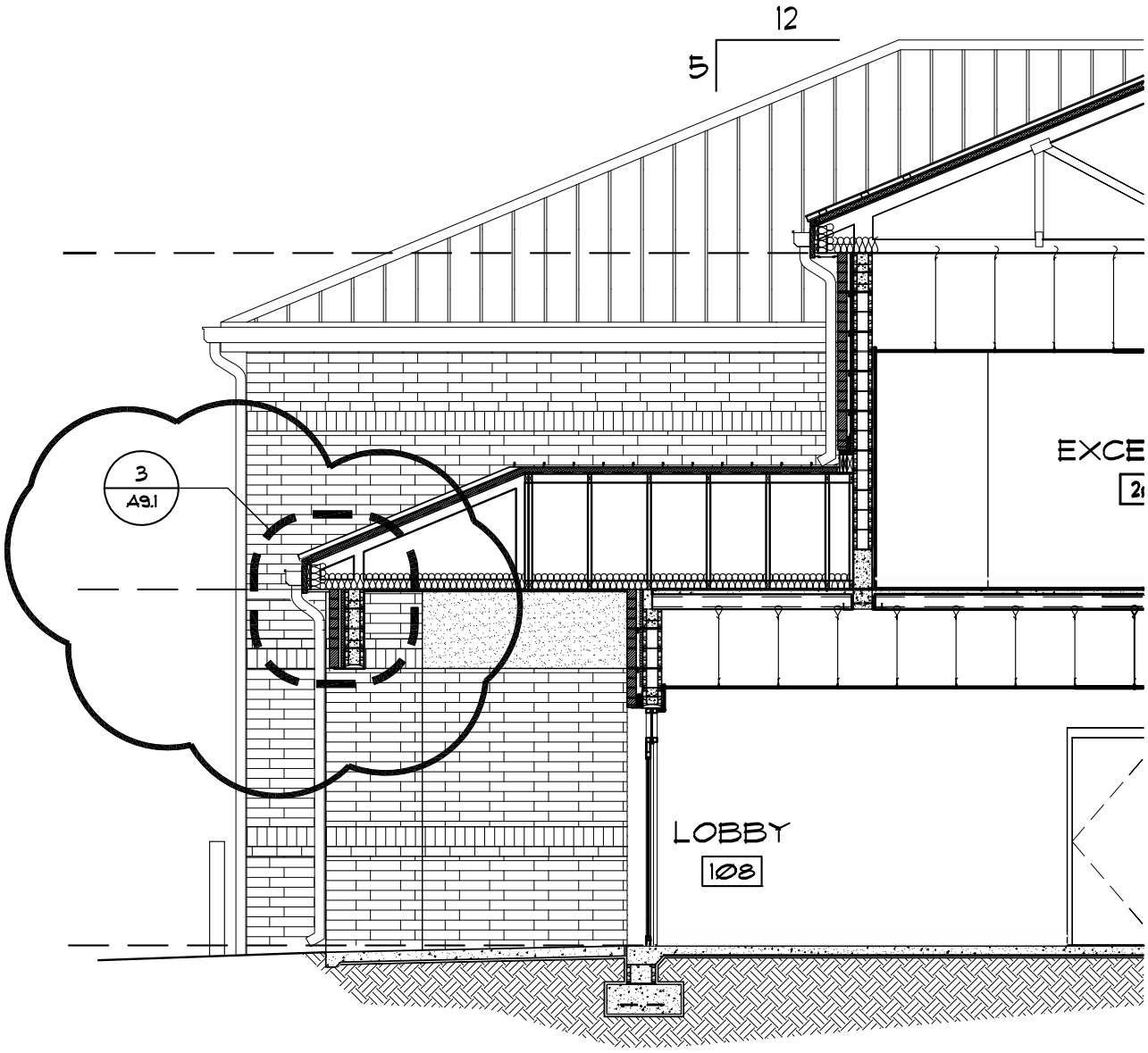

1
A2.4

BUILDING SECTION

SCALE: NTS

Sarmer Ranaldi
Planning and Architecture Inc
820 West Broadway Stree, Suite 3000
Oviedo, Florida 32765
ph 407.977.1080 fx 407.977.1019

TITLE: BUILDING SECTION	
PROJECT: PAISLEY FIRE STATION	
Project No.: 07010	SCALE: N.T.S.
By: SRI	DATE: 03-17-09

ADD # 2
A2-4.8

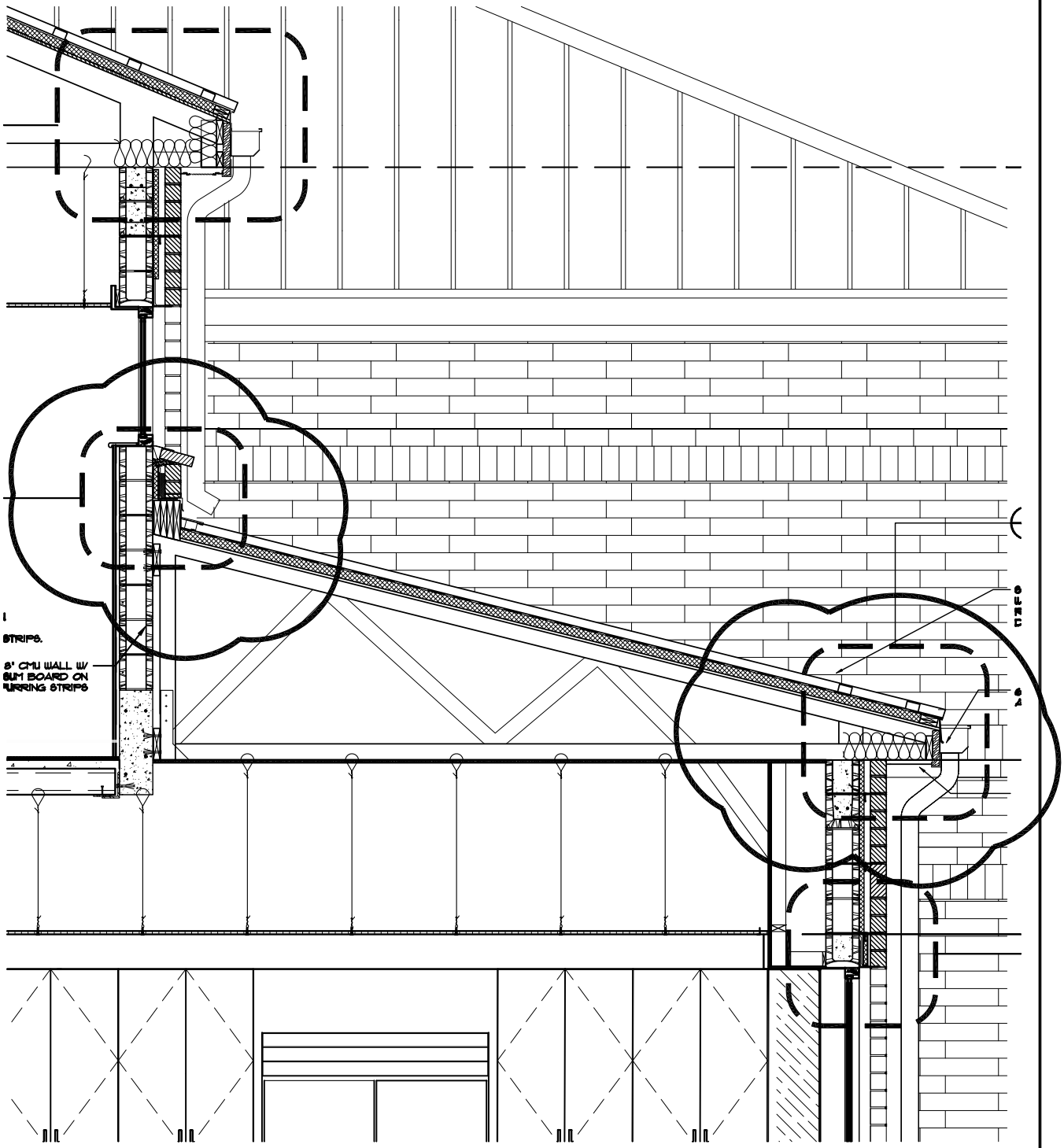

2 WALL SECTION

A3.1 SCALE: NTS

Sarner Ranaldi
Planning and Architecture Inc
820 West Broadway Stree, Suite 3000
Oviedo, Florida 32765
ph 407.977.1080 fx 407.977.1019

TITLE: WALL SECTION	
PROJECT: PAISLEY FIRE STATION	
Project No.: 07010	SCALE: N.T.S.
By: SRI	DATE: 03-17-09

ADD # 2

A3.1.11

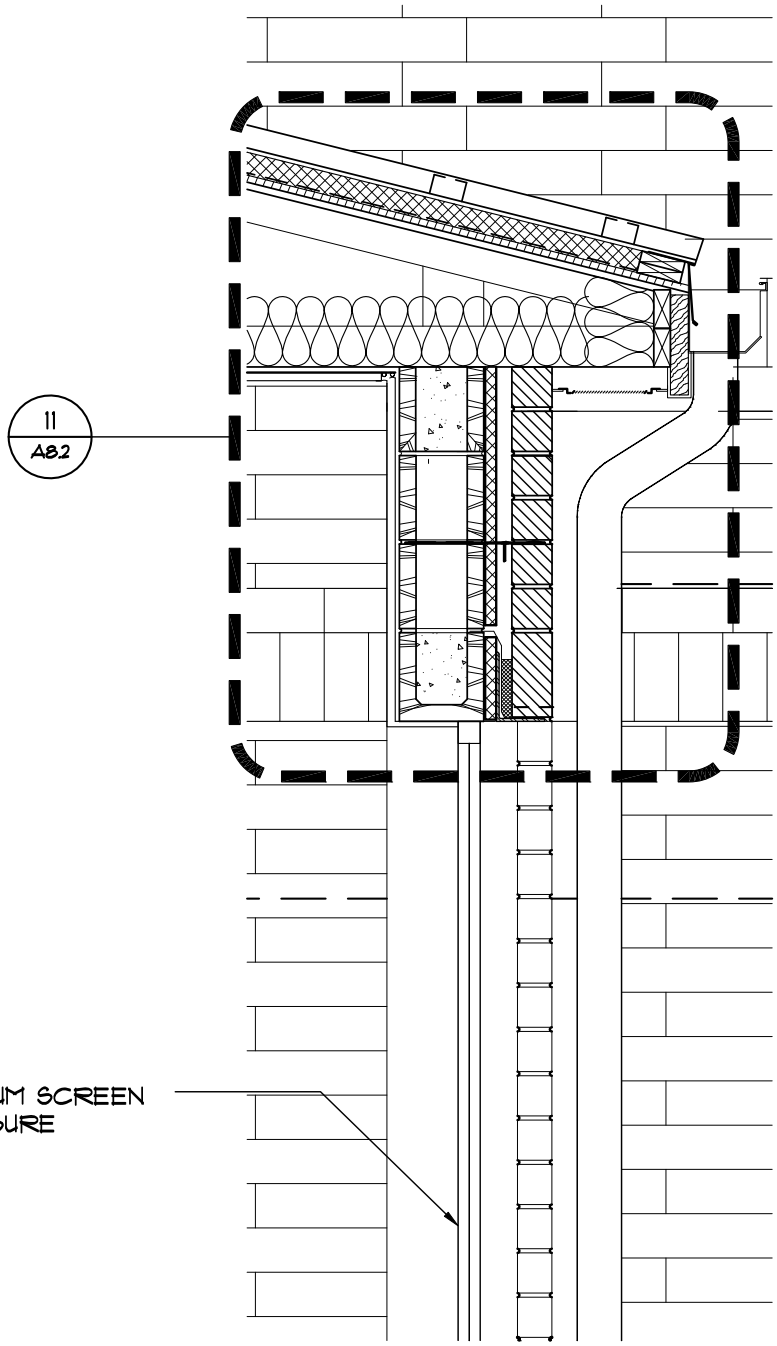

3
A3.1

WALL SECTION

SCALE: NTS

Sarmer Ranaldi
Planning and Architecture Inc
820 West Broadway Stree, Suite 3000
Oviedo, Florida 32765
ph 407.977.1080 fx 407.977.1019

TITLE: WALL SECTION	
PROJECT: PAISLEY FIRE STATION	
Project No.: 07010	SCALE: N.T.S.
By: SRI	DATE: 03-17-09

ADD # 2
A3-1.12

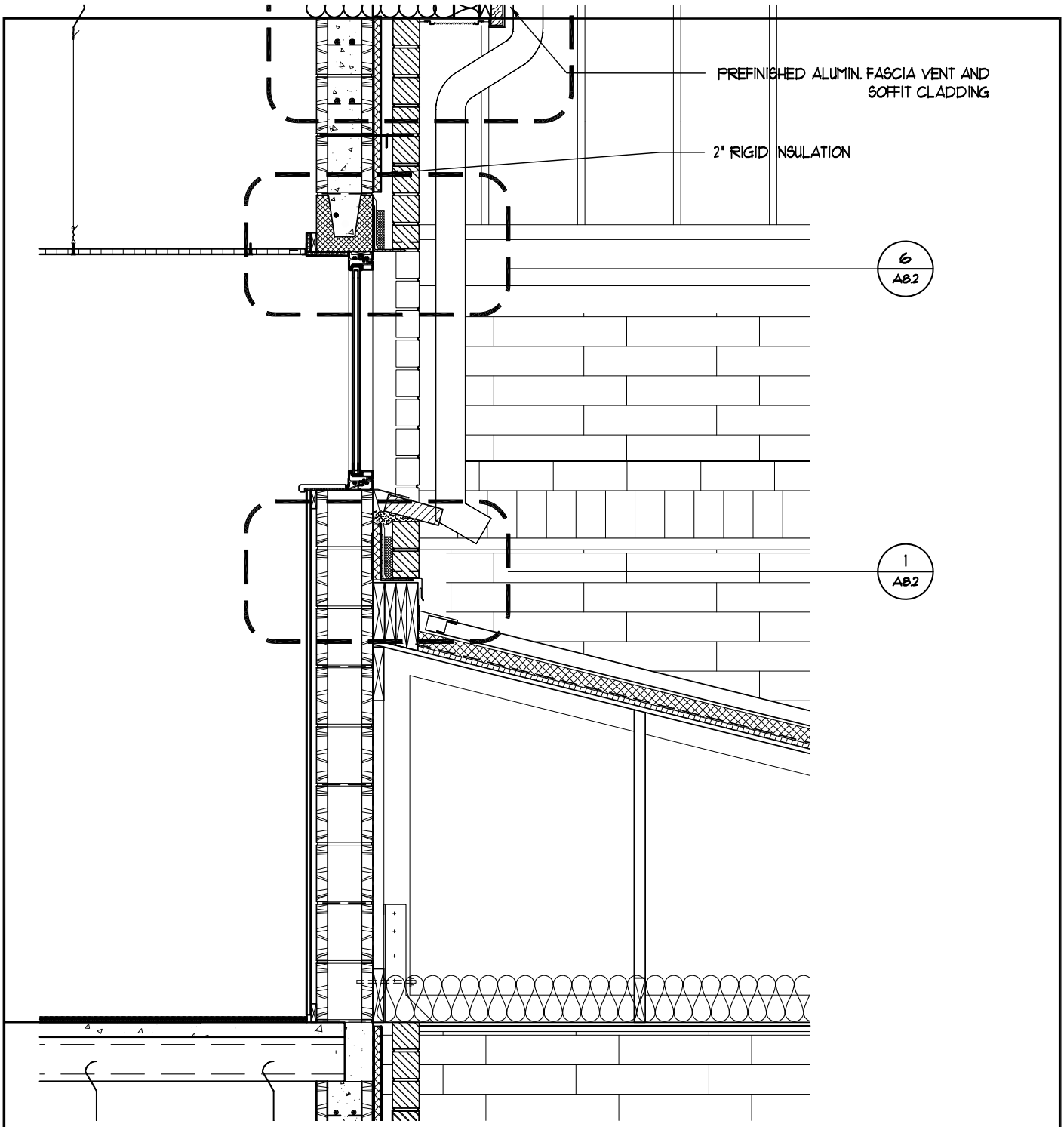

3 / A3.2 WALL SECTION

SCALE: NTS

Sarmer Ranaldi
Planning and Architecture Inc
820 West Broadway Stree, Suite 3000
Oviedo, Florida 32765
ph 407.977.1080 fx 407.977.1019

TITLE: WALL SECTION	
PROJECT: PAISLEY FIRE STATION	
Project No.: 07010	SCALE: N.T.S.
By: SRI	DATE: 03-17-09

ADD # 2

A3-1.13

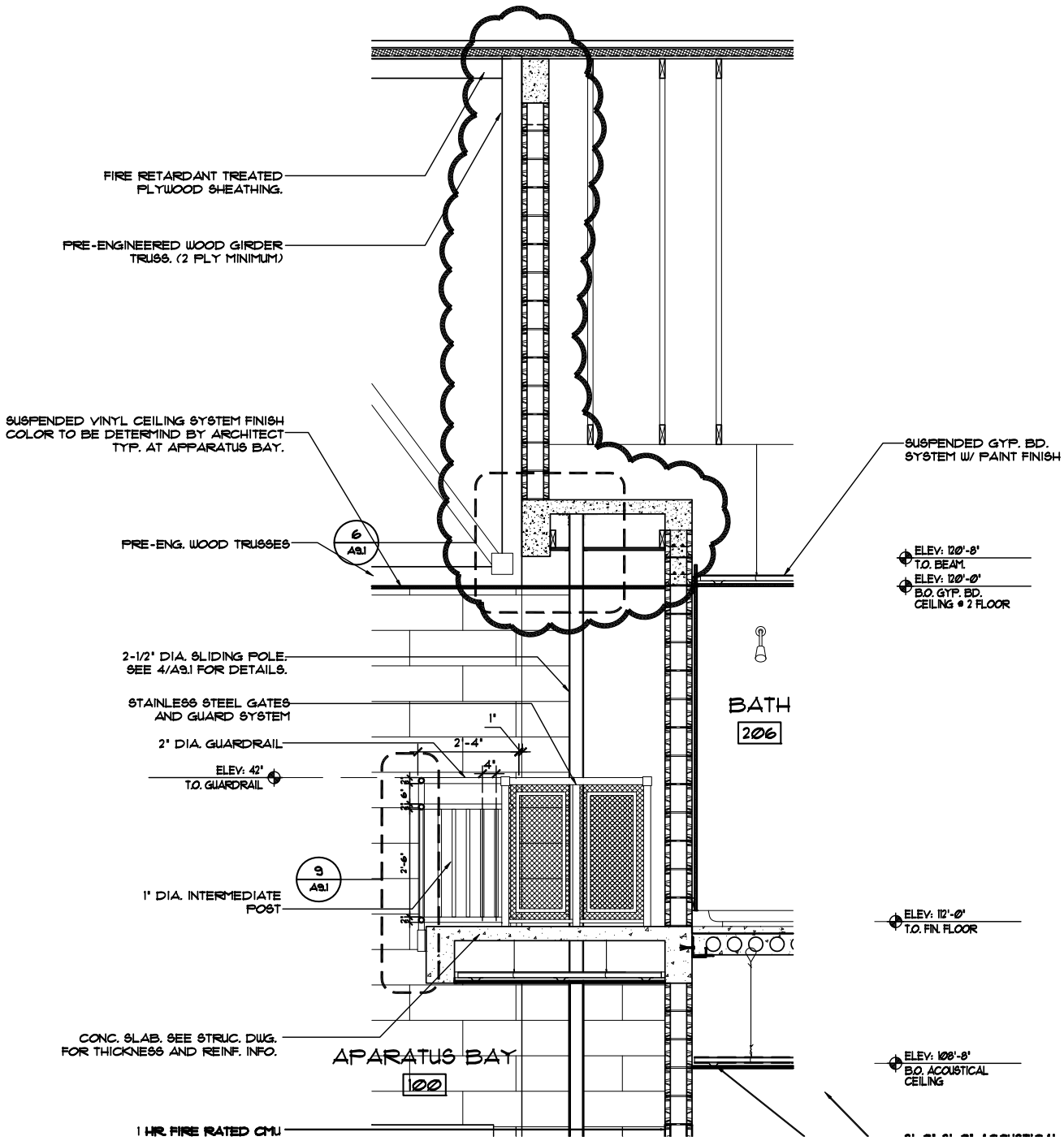

1 / A3.3 BALCONY SECTION

SCALE: NTS

Sarmer Ranaldi
Planning and Architecture Inc
820 West Broadway Stree, Suite 3000
Oviedo, Florida 32765
ph 407.977.1080 fx 407.977.1019

TITLE: BALCONY SECTION	
PROJECT: PAISLEY FIRE STATION	
Project No.: 07010	SCALE: N.T.S.
By: SRI	DATE: 03-17-09

ADD # 2

A3-3.14

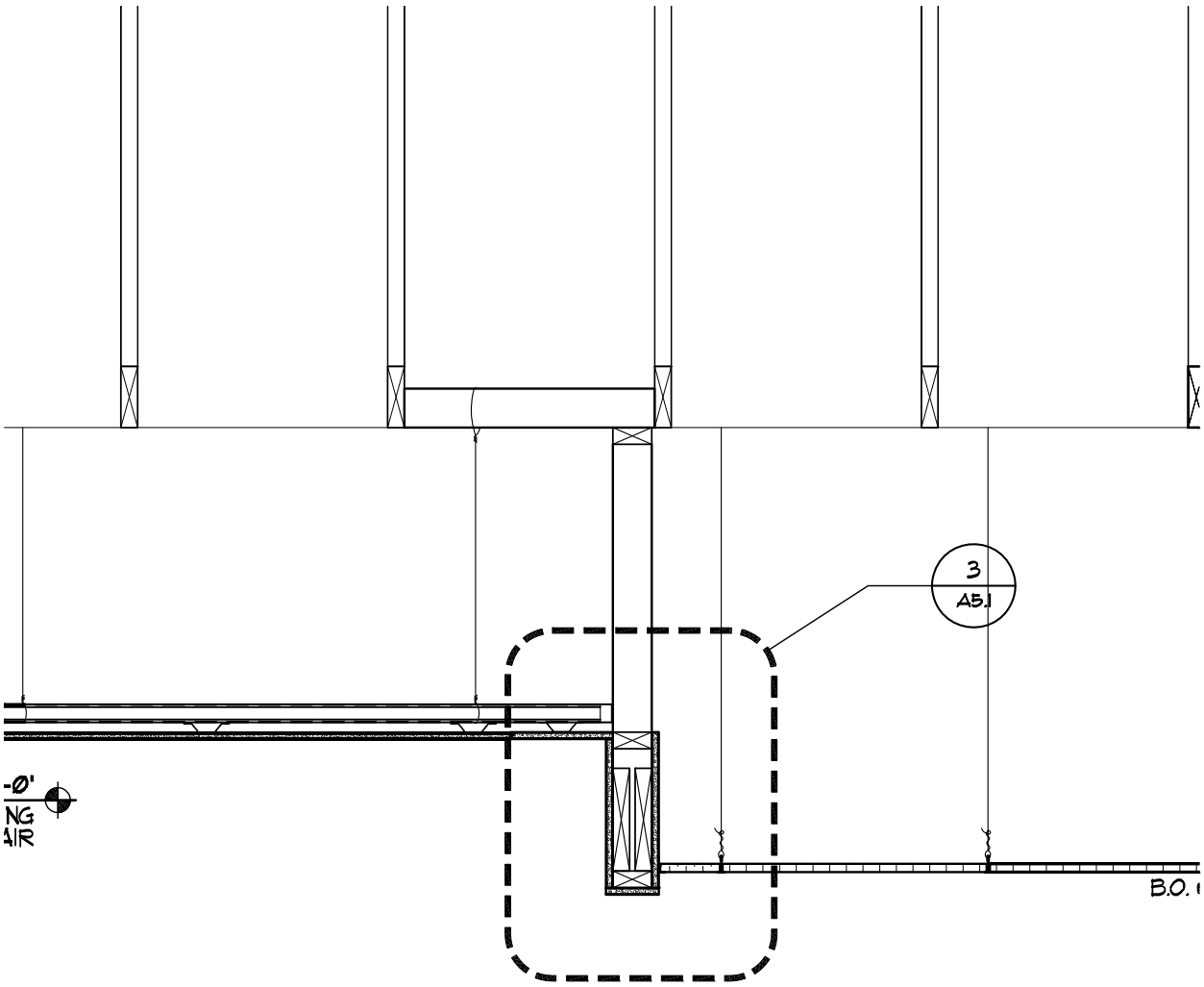

1
A3.5

STAIR SECTION

SCALE: NTS

Sarmer Ranaldi
Planning and Architecture Inc
820 West Broadway Stree, Suite 3000
Oviedo, Florida 32765
ph 407.977.1080 fx 407.977.1019

TITLE: STAIR SECTION		
PROJECT: PAISLEY FIRE STATION		
Project No.: 07010	SCALE: N.T.S.	
By: SRI	DATE: 03-17-09	

ADD # 2
A3-5.15

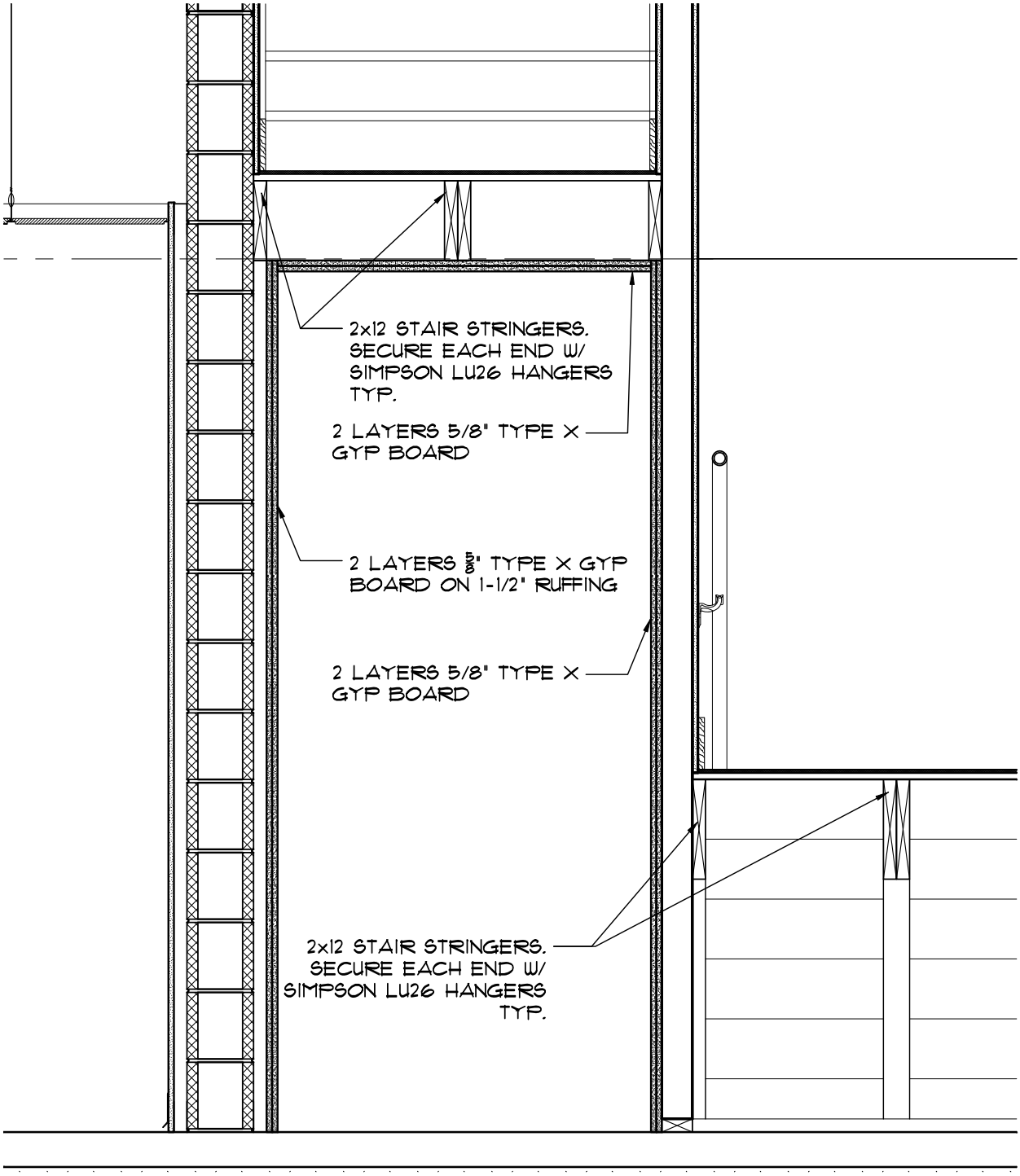

2 / A3.5 STAIR SECTION

SCALE: NTS

Sarmer Ranaldi
Planning and Architecture Inc
820 West Broadway Stree, Suite 3000
Oviedo, Florida 32765
ph 407.977.1080 fx 407.977.1019

TITLE: STAIR SECTION	
PROJECT: PAISLEY FIRE STATION	
Project No.: 07010	SCALE: N.T.S.
By: SRI	DATE: 03-17-09

ADD # 2
A3-5.16

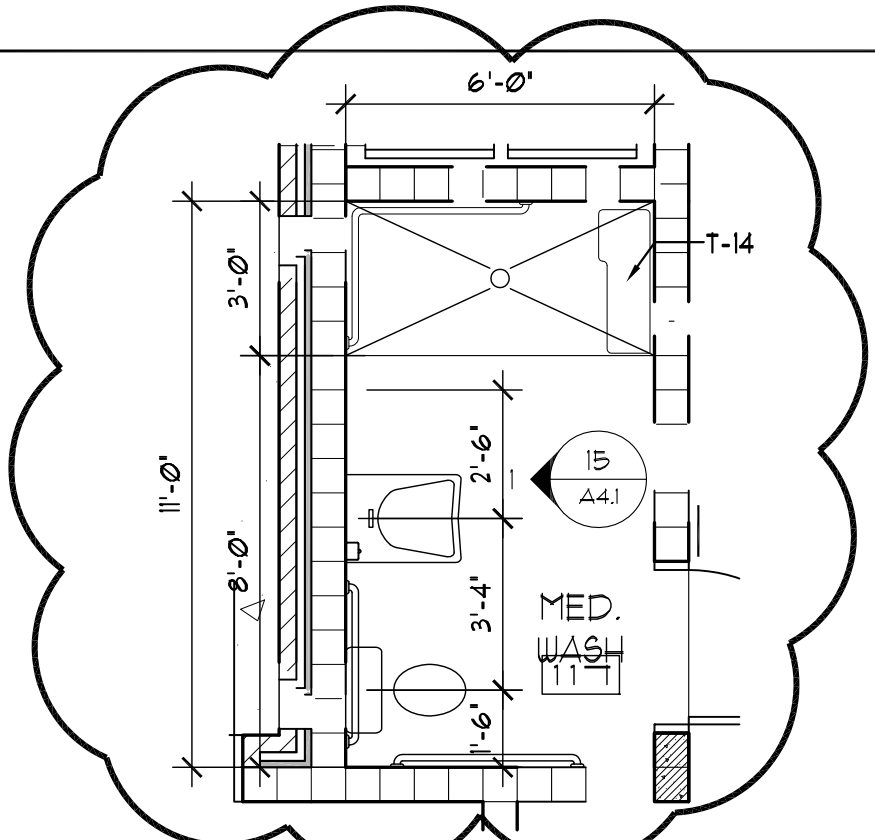

9 A4.1 MEDICAL WASH 117
SCALE: NTS

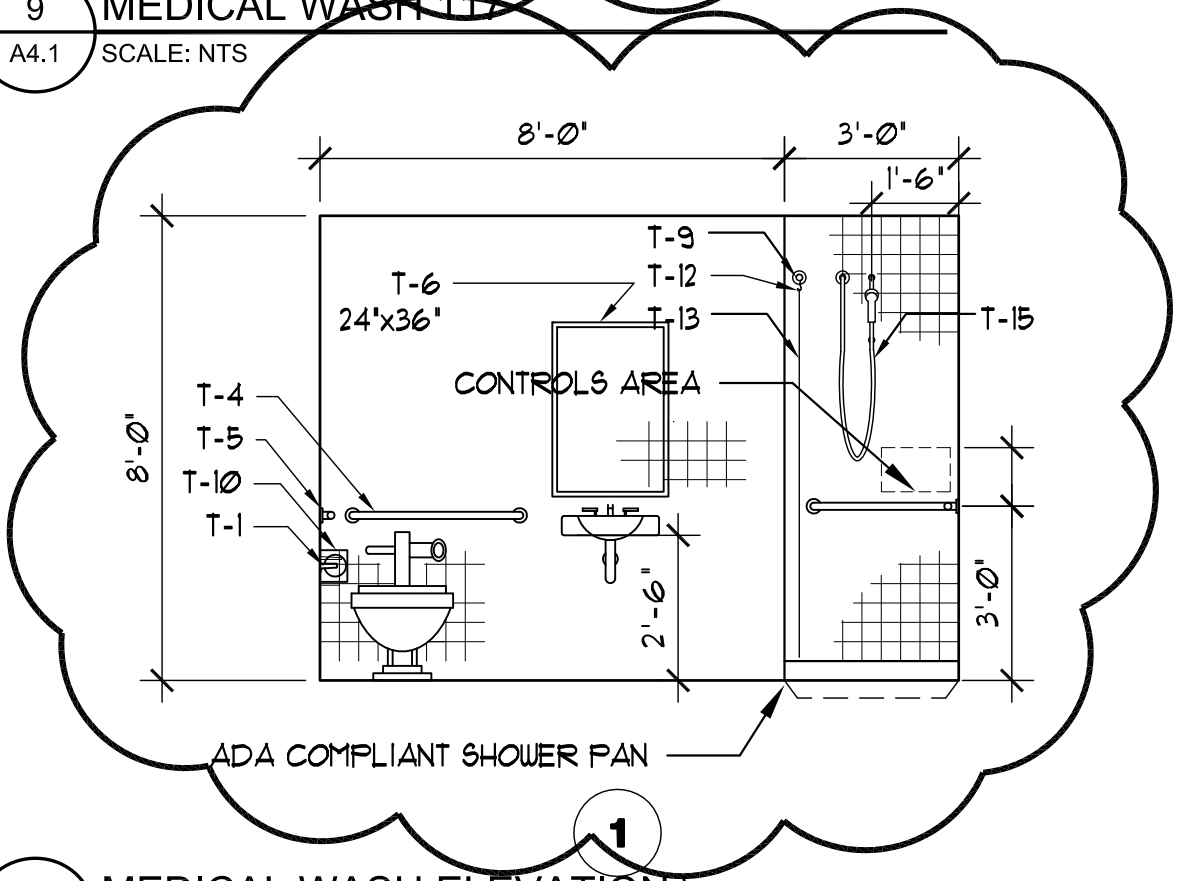

15 A4.1 MEDICAL WASH ELEVATION
SCALE: NTS

Sarmer Ranaldi
Planning and Architecture Inc
820 West Broadway Stree, Suite 3000
Oviedo, Florida 32765
ph 407.977.1080 fx 407.977.1019

TITLE: ENLARGED PLANS	
PROJECT: PAISLEY FIRE STATION	
Project No.: 07010	SCALE: N.T.S.
By: SRI	DATE: 03-17-09

ADD # 2
A4-1.17

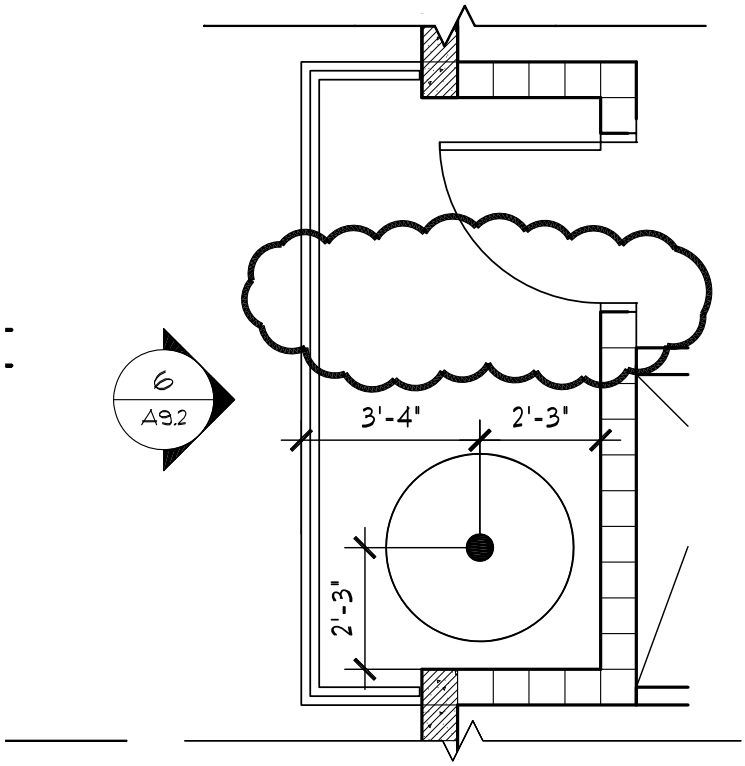

17 / A4.1 SLIDING POLE PLAN

SCALE: NTS

Sarmer Ranaldi
Planning and Architecture Inc
820 West Broadway Stree, Suite 3000
Oviedo, Florida 32765
ph 407.977.1080 fx 407.977.1019

TITLE: ENLARGED PLANS	
PROJECT: PAISLEY FIRE STATION	
Project No.: 07010	SCALE: N.T.S.
By: SRI	DATE: 03-17-09

ADD # 2
A4-1.18

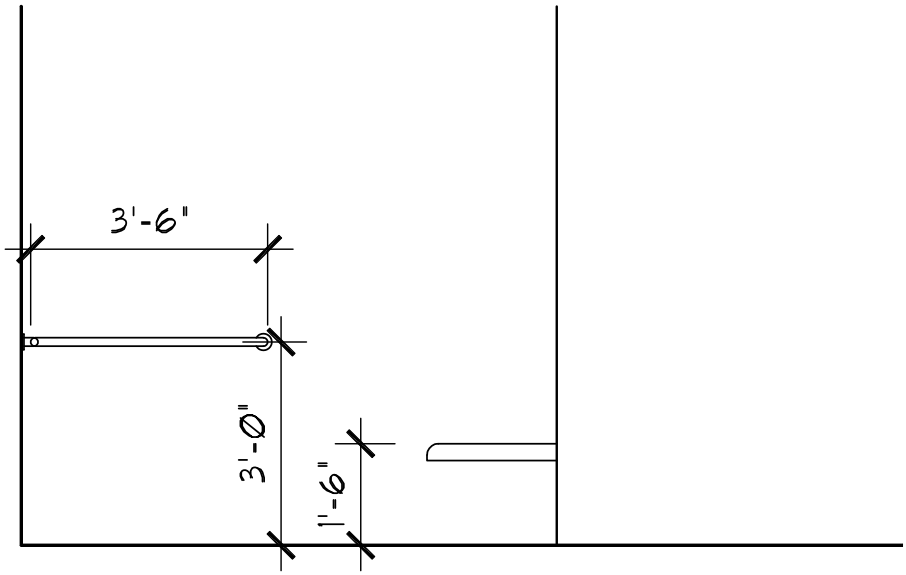

H/C SHOWER GRAB BARS AND SEAT

Sarmer Ranaldi
Planning and Architecture Inc
820 West Broadway Stree, Suite 3000
Oviedo, Florida 32765
ph 407.977.1080 fx 407.977.1019

TITLE: HC SHOWER GRAB BARS & SEAT ELEVATION	
PROJECT: PAISLEY FIRE STATION	
Project No.: 07010	SCALE: N.T.S.
By: SRI DATE: 03-17-09	

ADD # 2
A4-2.19

TOILET ACCESSORIES LEGEND

MARK	DESCRIPTION
T-1	TOILET PAPER DISPENSER - BOBRICK B-699
T-2	PAPER TOWEL DISP. & WASTE RECEP. - BOBRICK B-3942
T-3	SOAP DISPENSER - BOBRICK B4-112
T-4	36" GRAB BAR (BOBRICK B-5806 x 36, OR EQUAL)
T-5	42" GRAB BAR (BOBRICK B-5806 x 42, OR EQUAL)
T-6	TILT MIRROR, 2'-0"W X 3'-0"H (BOBRICK B-293, OR EQUAL)
T-7	FRAMED MIRROR, 3'-0"W X 3'-0"H (BOBRICK B-165, OR EQUAL)
T-8	FRAMED MIRROR, 2'-0"W X 3'-0"H (BOBRICK B-165, OR EQUAL)
T-9	S.S. SHOWER CURTAIN ROD (BOBRICK B-6107, OR EQUAL)
T-10	HEAVY DUTY ROBE HOOK (BOBRICK B-211, OR EQUAL)
T-11	ALUMINUM AND ACRYLIC SLIDING SHOWER ENCLOSURE
T-12	S.S. SHOWER CURTAIN HOOKS (BOBRICK 204-1 OR EQUAL)
T-13	VINYL SHOWER CURTAIN (BOBRICK 204-2, OR EQUAL)
T-14	H/C FOLDING SHOWER SEAT (BOBRICK B-5181, OR EQUAL)
T-15	H/C SHOWER HEAD SYMMONS INDUSTRIES TEMPLROL II BP-56-300-B30-L-V

NOTE: ALL ITEMS PROVIDED BY AND INSTALLED BY CONTRACTOR.

Sarmer Ranaldi
Planning and Architecture Inc
820 West Broadway Stree, Suite 3000
Oviedo, Florida 32765
ph 407.977.1080 fx 407.977.1019

TITLE: TOILET ACCESSORIES LEGEND
PROJECT: PAISLEY FIRE STATION
Project No.: 07010 SCALE: N.T.S.
By: SRI DATE: 02-12-09

ADD # 2
A4-2.20

DOOR AND FRAME SCHEDULE

SCALE: NTS

A7.1

DOOR AND FRAME SCHEDULE

MARK	ROOM	DOOR TYPE	DOOR MATL	DOOR SIZE WIDTH	DOOR SIZE HEIGHT	DOOR SIZE THK	FRAME TYPE	FRAME MATL	FRAME DETAIL HEAD	FRAME DETAIL JAMB	FRAME DETAIL THRES	HARDWARE SET NUMBER	SIGN TYPE	FIRE RATING	GLAZING	POS
100A	100	G	SO	14'-0"	14'-0"	1"	--	--	9/A8.2	11/A8.1	14/A8.1	21	--	--	LG	
100B	100	G	SO	14'-0"	14'-0"	1"	--	--	9/A8.2	11/A8.1	14/A8.1	21	--	--	LG	
100C	100	C	HM	3'-0"	7'-0"	1 3/4"	HM2	HM	4/A8.1	3/A8.1	1/A8.1	1	--	--	LG	
100D	100	C	HM	3'-0"	7'-0"	1 3/4"	HM2	HM	4/A8.1	3/A8.1	1/A8.1	1	--	--	LG	
100E	100	G	SO	14'-0"	14'-0"	1"	--	--	9/A8.2	11/A8.1	14/A8.1	21	--	--	LG	
100F	100	G	SO	14'-0"	14'-0"	1"	--	--	9/A8.2	11/A8.1	14/A8.1	21	--	--	LG	
102A	102	C	HM	3'-0"	7'-0"	1 3/4	HM2	HM	4/A8.1	3/A8.1	1/A8.1	2	--	--	LG	
102B	102	B	HM	3'-0"	7'-0"	1 3/4"	HM2	HM	8/A8.1	9/A8.1	5/A8.1	9	--	60 MIN.	FRG	
104	104	A	HM	3'-0"	7'-0"	1 3/4"	HM2	HM	4/A8.1	3/A8.1	1/A8.1	5	--	--	--	
106	106	A	SCWD	3'-0"	7'-0"	1 3/4"	HM3	HM	7/A8.1	7/A8.1 SIM.	6/A8.1	6	2A	--	--	
108	108	C	HM	3'-0"	7'-0"	1 3/4"	HM1	HM	4/A8.1	3/A8.1	1/A8.1	4	--	--	--	
109	109	A	HM	3'-0"	7'-0"	1 3/4"	HM2	HM	4/A8.1	3/A8.1	11/A8.1	5	--	--	FRG	
110	110	A	SCWD	3'-0"	7'-0"	1 3/4"	HM2	HM	8/A8.1	9/A8.1	2/A8.1	7	1	--	--	
111	111	F	SCWD	3'-0"	7'-0"	1 3/4"	HM2	HM	8/A8.1	9/A8.1	2/A8.1	13	2C	--	--	
112	112	A	SCWD	3'-0"	7'-0"	1 3/4"	HM2	HM	7/A8.1	7/A8.1 SIM.	6/A8.1	15	2C	--	TG	
116	116	A	HM	3'-0"	7'-0"	1 3/4"	HM2	HM	13/A8.1	13/A8.1 SIM.	--	19	2C	60 MIN.	--	
117	117	A	HM	3'-0"	7'-0"	1 3/4"	HM2	HM	13/A8.1	13/A8.1 SIM.	--	20	2C	60 MIN.	--	
118	118	B	HM	3'-0"	7'-0"	1 3/4"	HM2	HM	8/A8.1	9/A8.1	--	16	2B	60 MIN.	FRG	
118A	118	A	HM	3'-0"	7'-0"	1 3/4"	HM2	HM	4/A8.1	3/A8.1	1/A8.1	5	--	--	--	
119	119	A	HM	3'-0"	7'-0"	1 3/4"	HM2	HM	13/A8.1	13/A8.1 SIM.	--	17	2C	60 MIN.	--	
120	120	A	HM	3'-0"	7'-0"	1 3/4"	HM2	HM	13/A8.1	13/A8.1 SIM.	--	17	2C	60 MIN.	--	
126	126	F	SCWD	2'-0"	6'-8"	1 3/4"	HM5	HM	8/A8.1	9/A8.1	2/A8.1	15	2C	--	--	
127	127	H	HM	5'-8"	7'-0"	1 3/4"	HM6	HM	13/A8.1	13/A8.1 SIM.	--	22	2C	--	--	
128	128	H	HM	5'-8"	7'-0"	1 3/4"	HM6	HM	13/A8.1	13/A8.1 SIM.	--	22	2C	--	--	
202	202	A	SCWD	3'-0"	7'-0"	1 3/4"	HM3	HM	7/A8.1	7/A8.1 SIM.	6/A8.1	8	2C	--	--	
203	202	A	SCWD	3'-0"	7'-0"	1 3/4"	HM3	HM	7/A8.1	7/A8.1 SIM.	6/A8.1	8	2C	--	--	
204	204	A	SCWD	3'-0"	7'-0"	1 3/4"	HM3	HM	7/A8.1	7/A8.1 SIM.	6/A8.1	10	2B	--	--	
206	206	A	SCWD	3'-0"	7'-0"	1 3/4"	HM3	HM	7/A8.1	7/A8.1 SIM.	6/A8.1	8	2C	--	--	
207	207	B	HM	3'-0"	6'-8"	1 3/4"	HM2	HM	8/A8.1	9/A8.1	5/A8.1	11	2C	60 MIN.	FRG	
208	208	A	SCWD	3'-0"	7'-0"	1 3/4"	HM3	HM	7/A8.1	7/A8.1 SIM.	6/A8.1	15	2C	--	--	

Sammer Ranaldi
Planning and Architecture Inc
820 West Broadway Stree, Suite 3000
Oviedo, Florida 32765
ph 407.977.1080 fx 407.977.1019

TITLE: DOOR AND FRAME SCHEDULE
PROJECT: PAISLEY FIRE STATION
Project No.: 07010 SCALE: N.T.S.
By: SRI DATE: 03-17-09

ADD # 2
A7-1.25

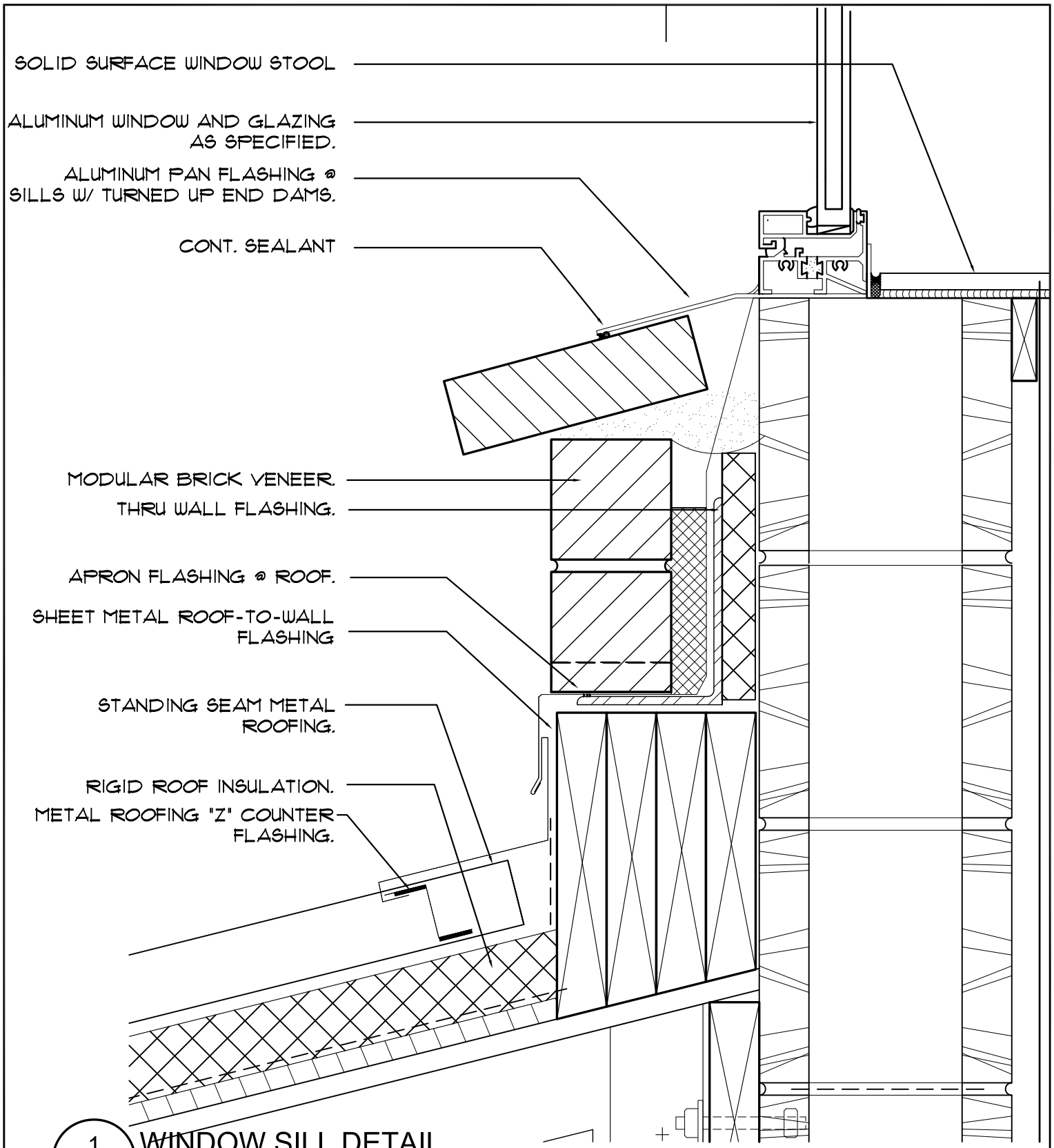

1 / A8.2 WINDOW SILL DETAIL

SCALE: 3"=1'0"

Sarmer Ranaldi
Planning and Architecture Inc
820 West Broadway Stree, Suite 3000
Oviedo, Florida 32765
ph 407.977.1080 fx 407.977.1019

TITLE: WINDOW DETAIL	
PROJECT: PAISLEY FIRE STATION	
Project No.: 07010	SCALE: N.T.S.
By: SRI	DATE: 03-17-09

ADD # 2
A8-2.21

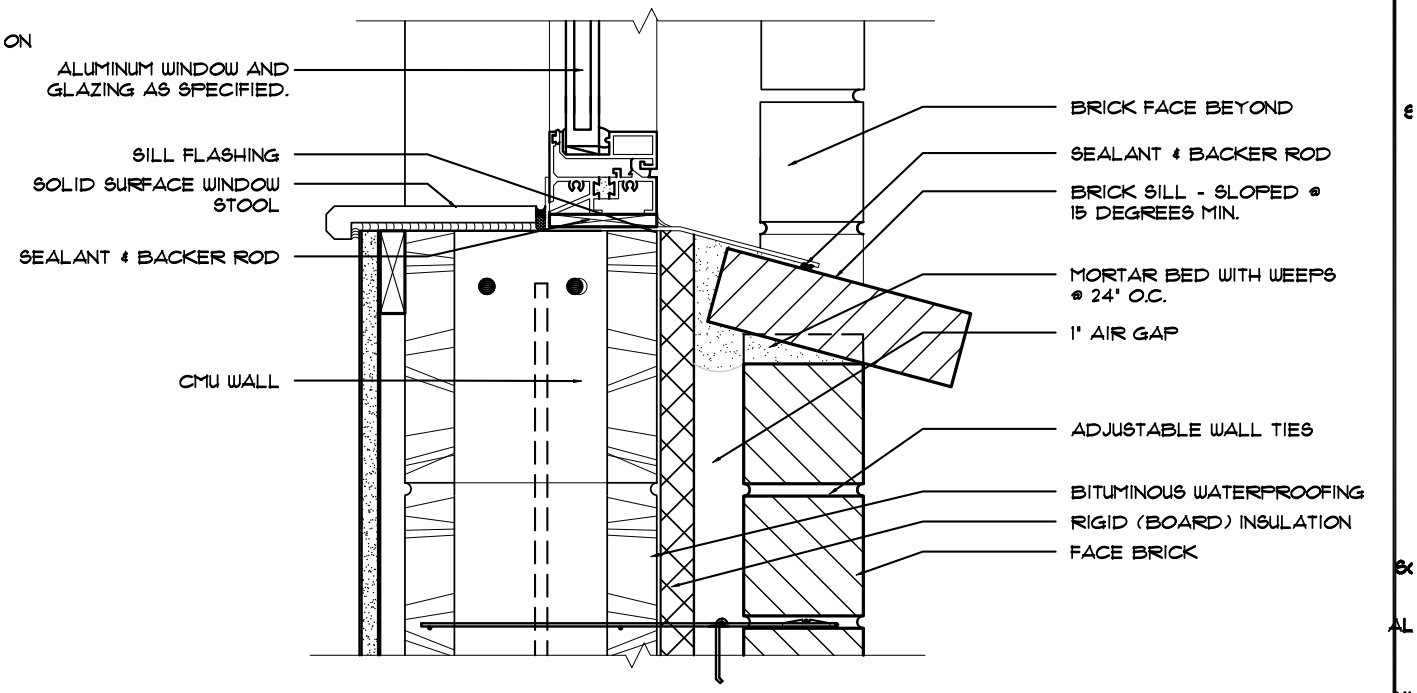

5 / A8.2 WINDOW SILL DETAIL

SCALE: 3"=1'0"

Sarner Ranaldi
Planning and Architecture Inc
820 West Broadway Stree, Suite 3000
Oviedo, Florida 32765
ph 407.977.1080 fx 407.977.1019

TITLE: WINDOW DETAIL	
PROJECT: PAISLEY FIRE STATION	
Project No.: 07010	SCALE: N.T.S.
By: SRI	DATE: 03-17-09

ADD # 2
A8-2.22

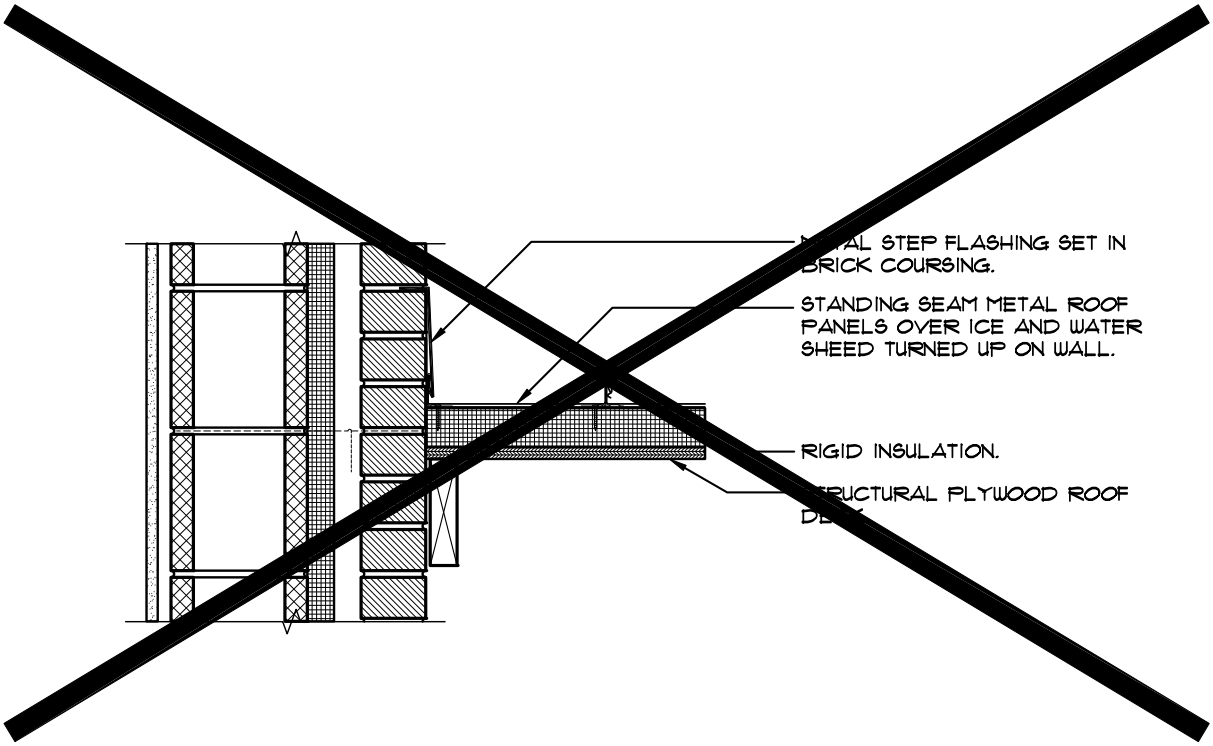

2 / A9.1 NOT USED

SCALE:NTS

Sarmer Ranaldi
Planning and Architecture Inc
820 West Broadway Stree, Suite 3000
Oviedo, Florida 32765
ph 407.977.1080 fx 407.977.1019

TITLE: NOT USED	
PROJECT: PAISLEY FIRE STATION	
Project No.: 07010	SCALE: N.T.S.
By: SRI	DATE: 03-17-09

ADD # 2
A9-1.23

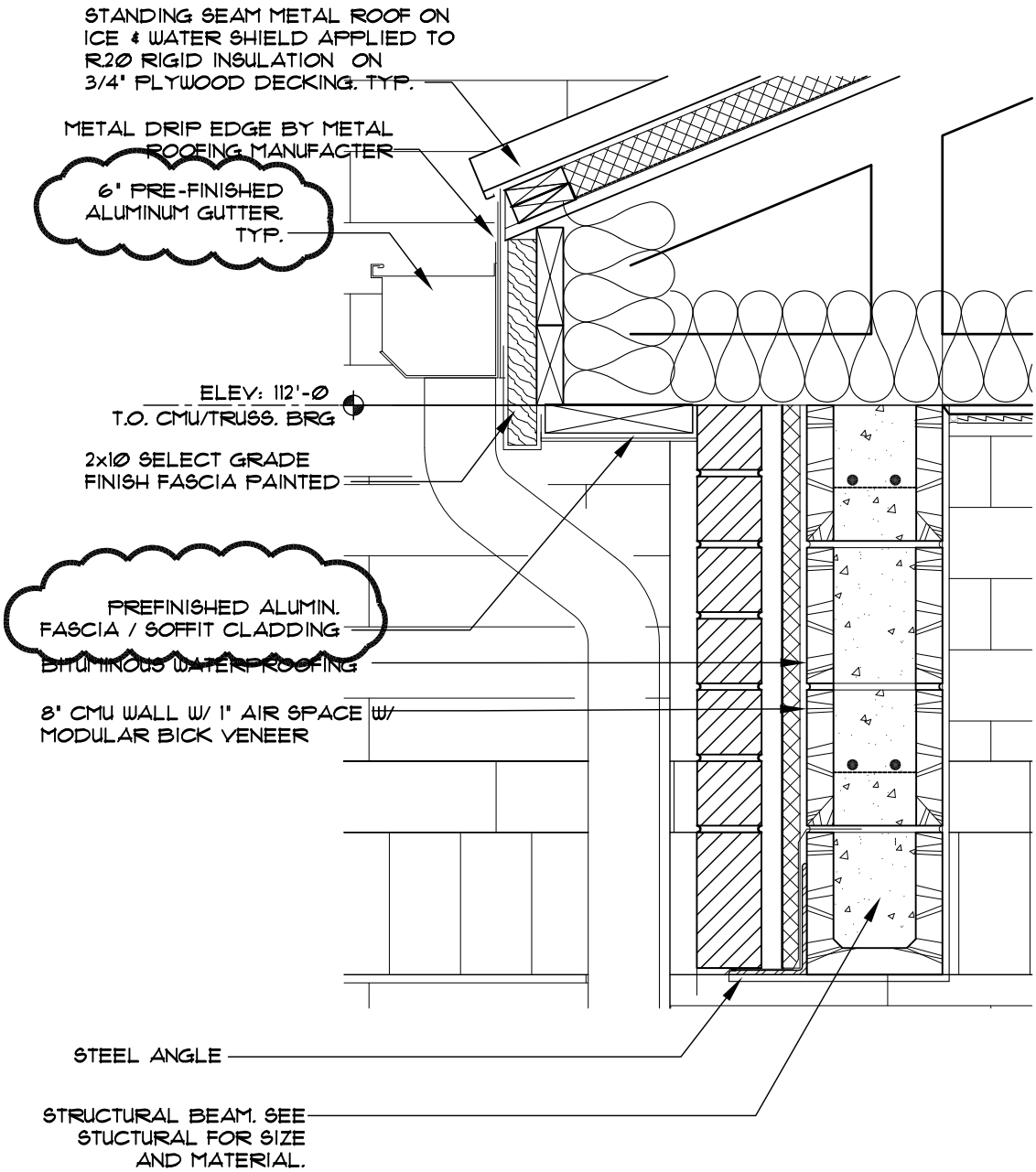

3 / A9.1 BEAM SECTION AT CANOPY

SCALE:NTS

Sarmer Ranaldi
Planning and Architecture Inc
820 West Broadway Stree, Suite 3000
Oviedo, Florida 32765
ph 407.977.1080 fx 407.977.1019

TITLE: BEAM SECTION AT CANOPY	
PROJECT: PAISLEY FIRE STATION	
Project No.: 07010	SCALE: N.T.S.
By: SRI DATE: 03-17-09	

ADD # 2
A9-1.24

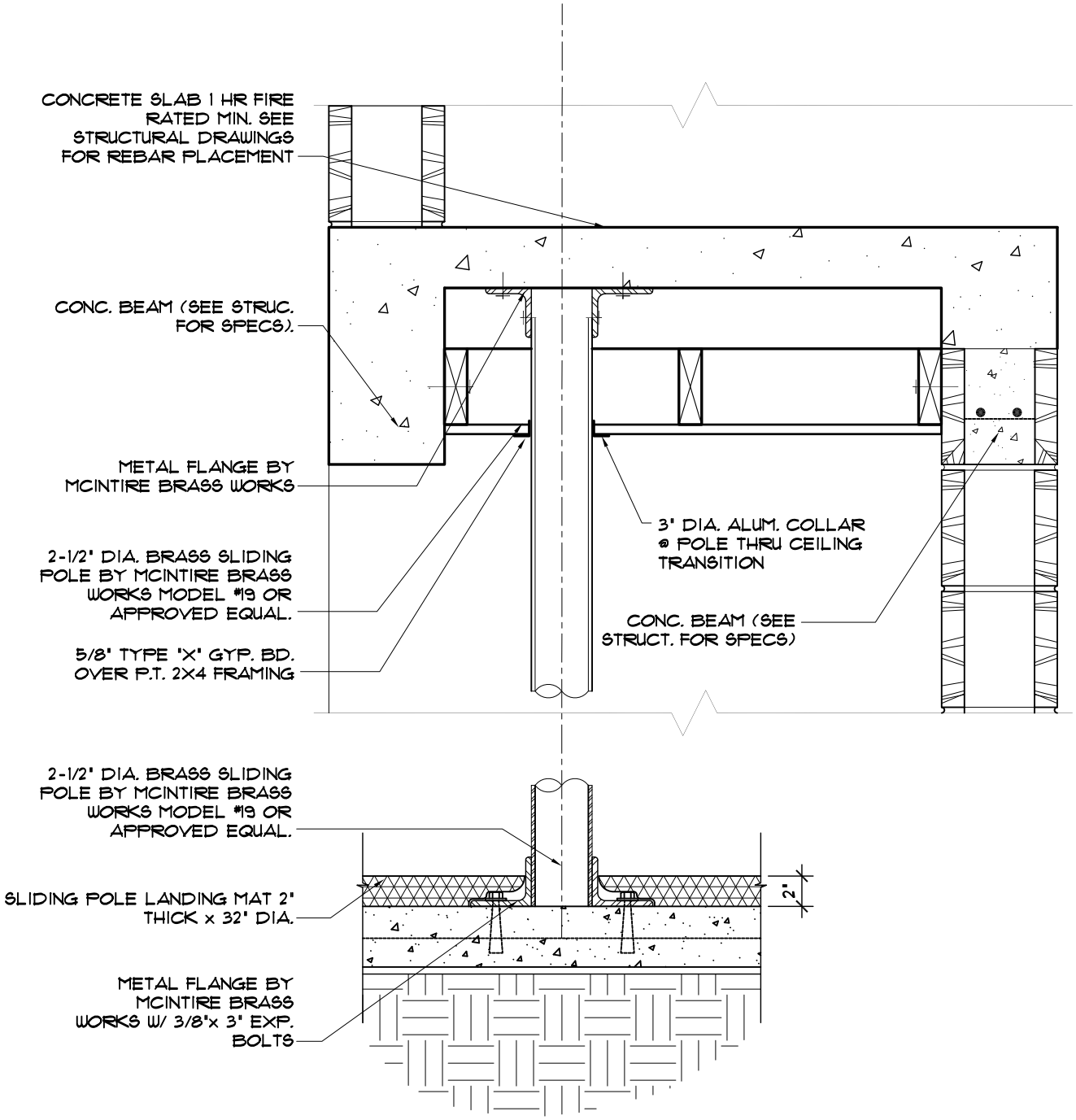

6 / A9.1

FIRE POLE DETAIL

SCALE:NTS

Sarmer Ranaldi
Planning and Architecture Inc
820 West Broadway Stree, Suite 3000
Oviedo, Florida 32765
ph 407.977.1080 fx 407.977.1019

TITLE: FIRE POLE DETAIL	
PROJECT: PAISLEY FIRE STATION	
Project No.: 07010	SCALE: N.T.S.
By: SRI	DATE: 03-17-09

ADD # 2
A9-1.26

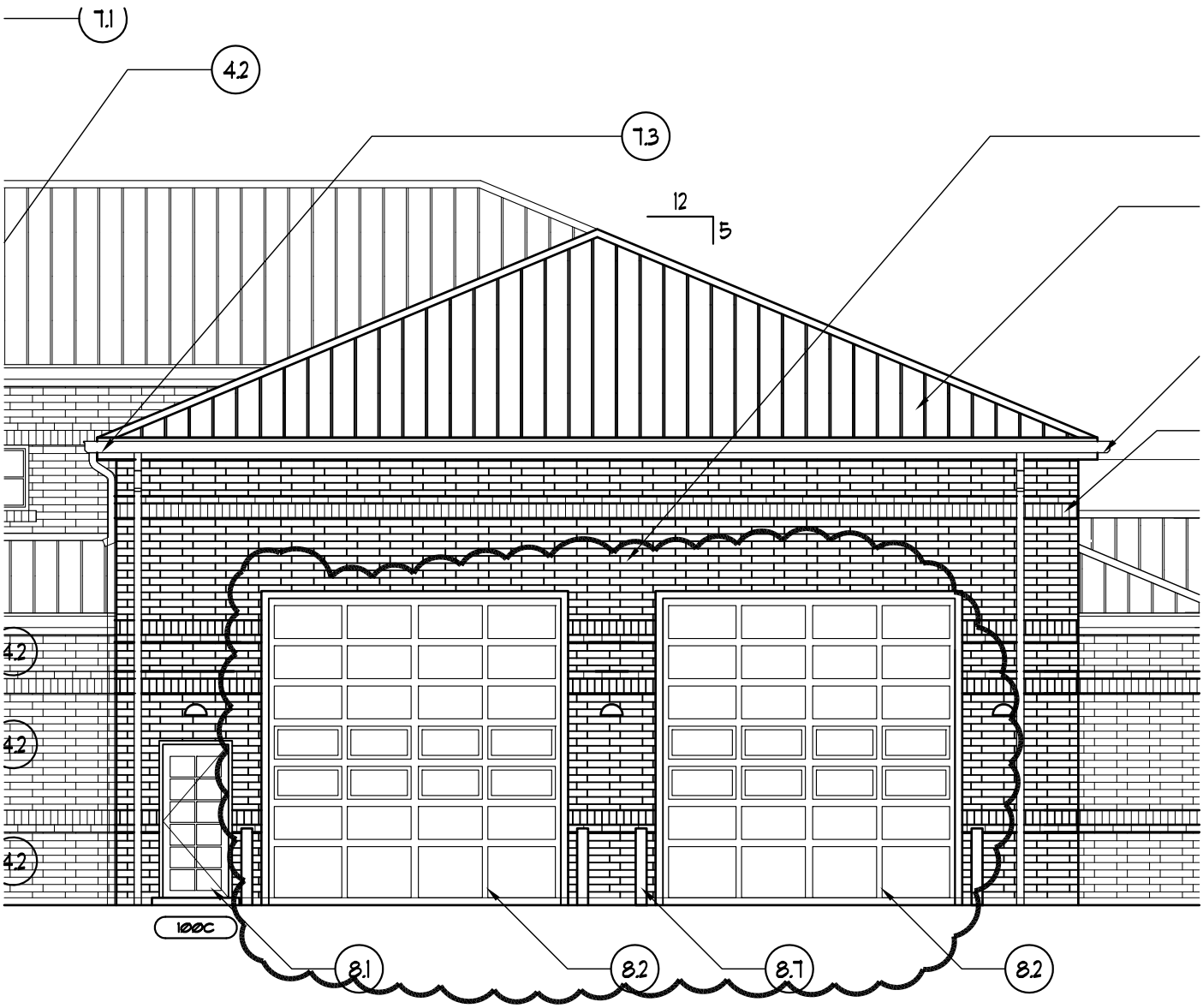

2 / A2.1 EAST ELEVATION

SCALE: NTS

Sarmer Ranaldi
Planning and Architecture Inc
820 West Broadway Stree, Suite 3000
Oviedo, Florida 32765
ph 407.977.1080 fx 407.977.1019

TITLE: EAST ELEVATION	
PROJECT: PAISLEY FIRE STATION	
Project No.: 07010	SCALE: N.T.S.
By: SRI	DATE: 03-17-09

ADD # 2
A2-1.27

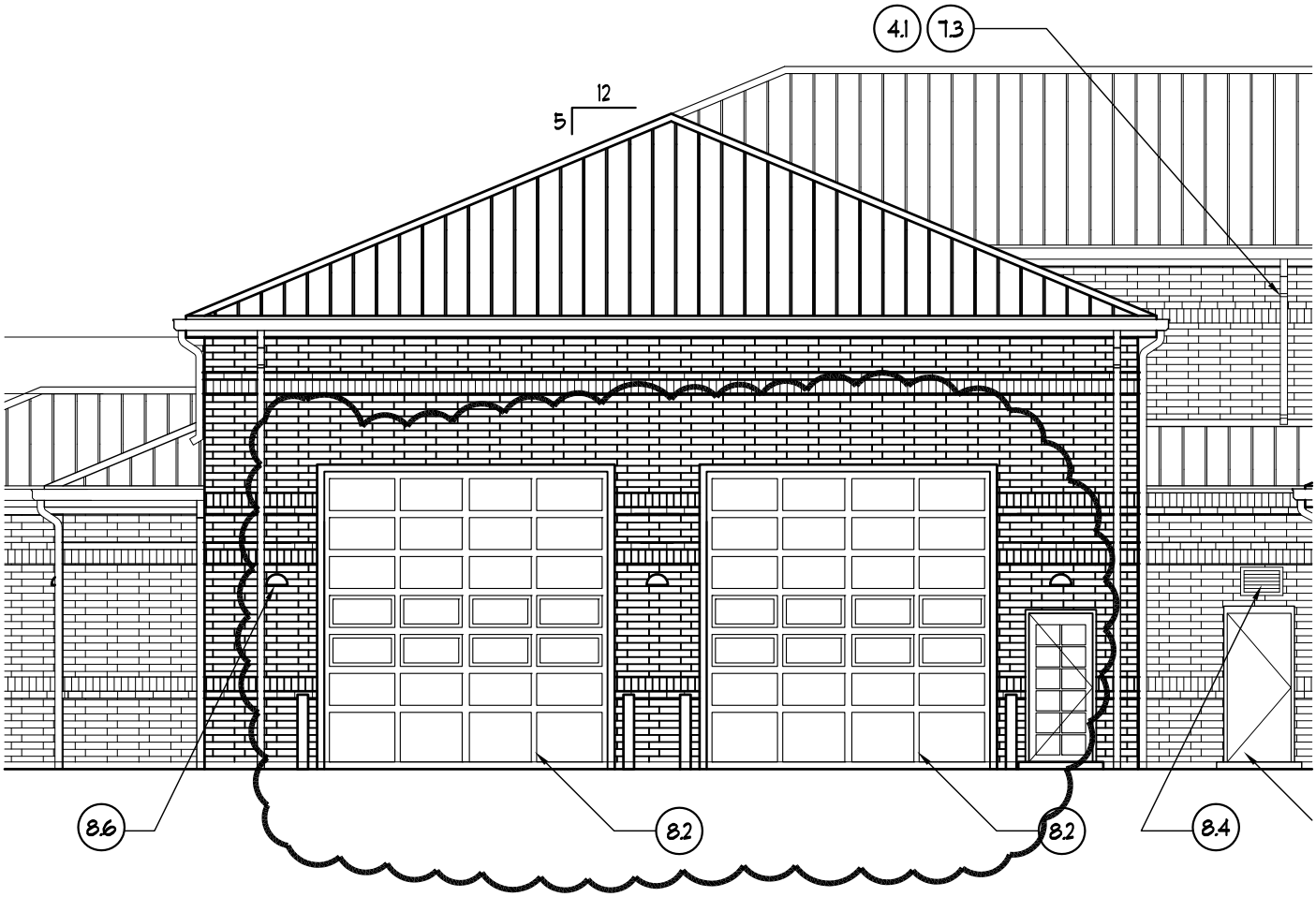

1 / A2.1 WEST ELEVATION

SCALE: NTS

Sarmer Ranaldi
Planning and Architecture Inc
820 West Broadway Stree, Suite 3000
Oviedo, Florida 32765
ph 407.977.1080 fx 407.977.1019

TITLE: WEST ELEVATION	
PROJECT: PAISLEY FIRE STATION	
Project No.: 07010	SCALE: N.T.S.
By: SRI	DATE: 03-17-09

ADD # 2
A2-1.28

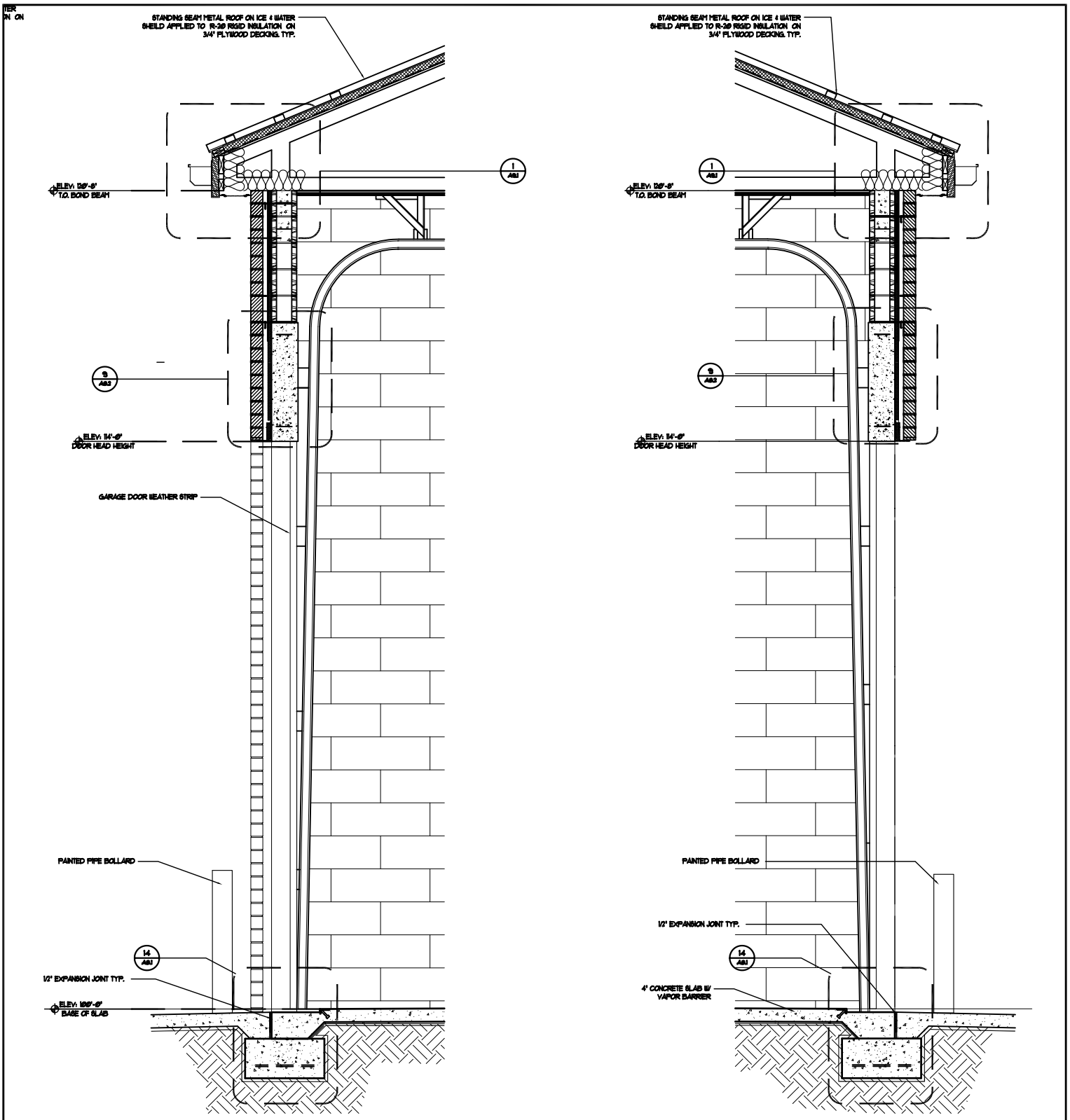

2 & 3 / A3.2 **WALL SECTION**

SCALE: NTS

Sarmer Ranaldi
Planning and Architecture Inc
820 West Broadway Stree, Suite 3000
Oviedo, Florida 32765
ph 407.977.1080 fx 407.977.1019

TITLE: WALL SECTION	
PROJECT: PAISLEY FIRE STATION	
Project No.: 07010	SCALE: N.T.S.
By: SRI	DATE: 03-17-09

ADD # 2
A3-2.29

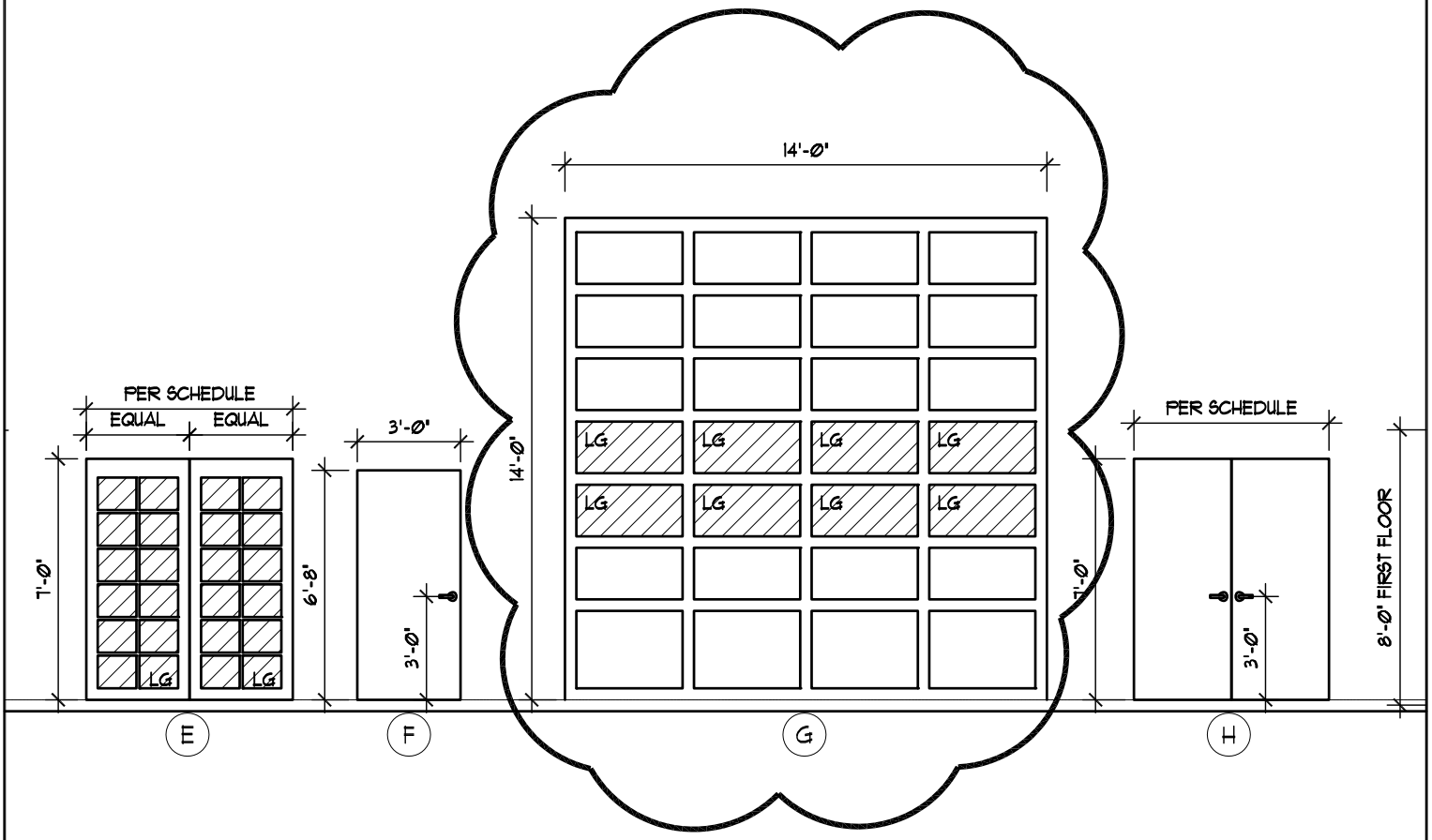

1
A7.1

DOOR TYPES

SCALE: NTS

Sarmer Ranaldi
Planning and Architecture Inc
820 West Broadway Stree, Suite 3000
Oviedo, Florida 32765
ph 407.977.1080 fx 407.977.1019

TITLE: DOOR TYPES		
PROJECT: PAISLEY FIRE STATION		
Project No.: 07010	SCALE: N.T.S.	
By: SRI	DATE: 03-17-09	

ADD # 2
A7-1.30

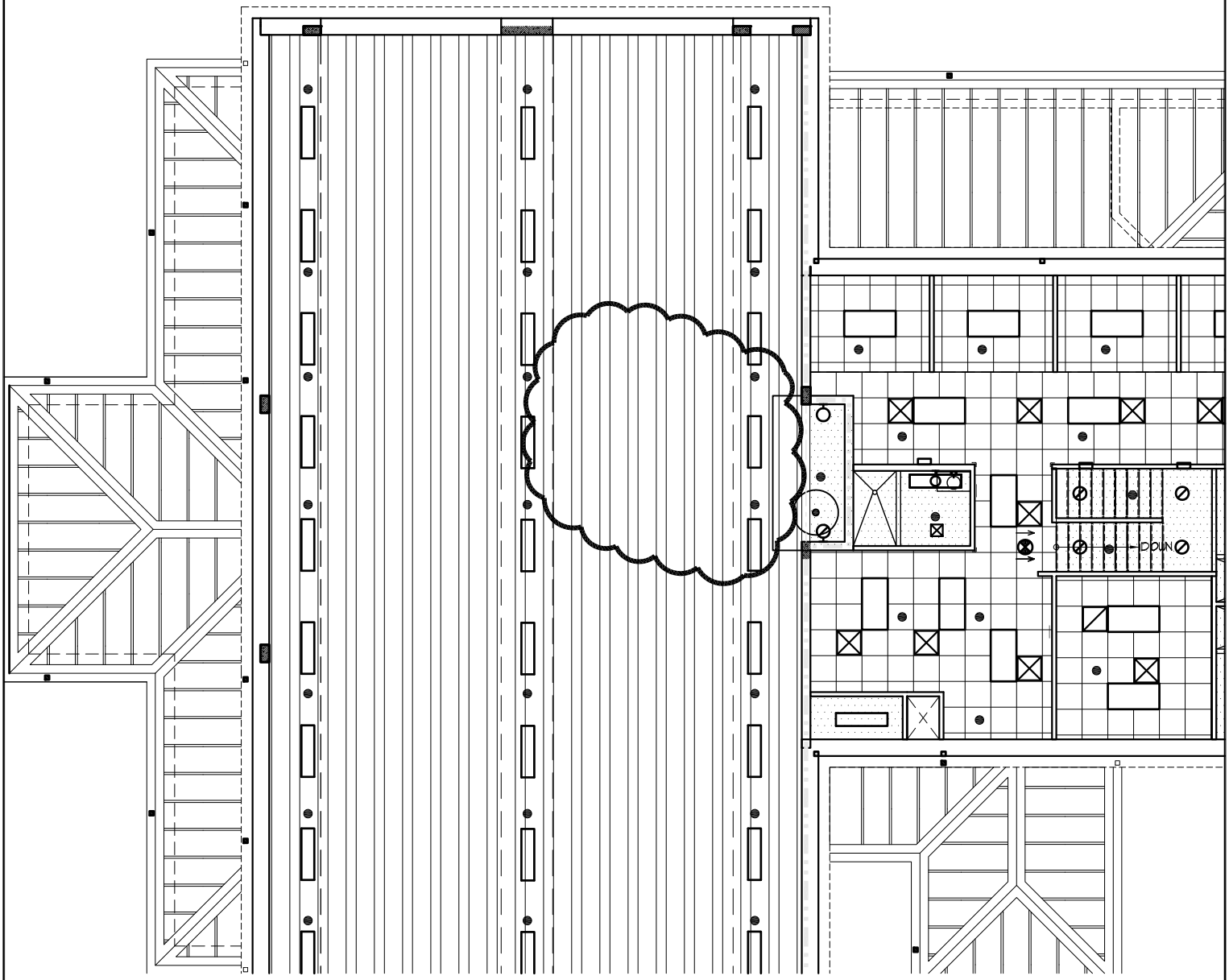

2
A5.1

SECOND FLOOR REFLECTED CEILING PLAN

SCALE:NTS

Sarmer Ranaldi
Planning and Architecture Inc
820 West Broadway Stree, Suite 3000
Oviedo, Florida 32765
ph 407.977.1080 fx 407.977.1019

TITLE: REFLECTED CEILING PLAN	
PROJECT: PAISLEY FIRE STATION	
Project No.: 07010	SCALE: N.T.S.
By: SRI DATE:	03-17-09

ADD # 2
A5.1.31

FLUORESCENT STRIP FIXTURE

FLUORESCENT STRIP FIXTURE - EMERGENCY POWER

FLUORESCENT FIXTURE - CEILING MOUNTED

FLUORESCENT FIXTURE - CEILING MOUNTED, EMERGENCY POWER

FLUORESCENT FIXTURE - WALL MOUNTED

HID, FLUORESCENT OR INCANDESCENT FIXTURE - RECESSED

HID, FLUORESCENT OR INCANDESCENT WALL WASH FIXTURE - RECESSED

HID, FLUORESCENT OR INCANDESCENT FIXTURE - SURFACE MOUNTED

EF M MOTOR CONNECTION, MARK NUMBER WILL IDENTIFY EQUIPMENT, EF, AHU, CU, ETC. SEE MOTOR CONNECTION SCHEDULE.

30/3 NF 3R NON FUSIBLE HEAVY DUTY SAFETY SWITCH, SIZE AND NUMBER OF POLES ARE INDICATED.

2 LC LIGHTING CONTROLLER

SH WALL MOUNTED SHUNT TRIP STATION, MOUNT 7'-0" AFG FOR OUTDOOR INSTALLATION AND 4'-0" FOR INDOOR INSTALLATION

30/3 25 3R FUSIBLE HEAVY DUTY SAFETY SWITCH, SIZE AND NUMBER OF POLES ARE INDICATED.

ENCLOSURE NEMA RATING

DISCONNECT SIZE, #POLES

DUPLEX RECEPTACLE, MOUNT 4" ABOVE COUNTER OR BACKSPLASH. MAXIMUM 48" TO CENTER.

QUADRAPLEX RECEPTACLE IN TWO GANG BOX COVER.

-30R SPECIAL OUTLET, SUBSCRIPT INDICATES NEMA CONFIGURATION NUMBER

DUPLEX RECEPTACLE FLUSH MOUNTED IN CEILING

DUPLEX RECEPTACLE ON EMERGENCY CIRCUIT

QUAD RECEPTACLE ON EMERGENCY CIRCUIT

PS PLASMA SCREEN

TVEC TELEVISION EQUIPMENT CABINET

2 **SECURITY**

KP KEYPAD ENTRY, REFER TO ARCHITECTURAL SPECIFICATION

LUMINAIRE SCHEDULE - SITE

TYPE	DESCRIPTION	TOTAL	LAMPS			VOLTAGE	MOUNTING	NOTES
SA	ARM MOUNTED FULL CUT-OFF PARKING LOT LIGHT, SINGLE PIECE DIE-CAST ALUMINUM W/INTEGREL ARM, TEMPERED GLASS LENS, FULLY SEALED GASKET, TOOL-LESS ENTRY VIA SPRING LOADED LATCHES, 250W PULSE START METAL HALIDE LAMP, TYPE IV WIDE FORWARD THROW DISTRIBUTION, DARK BRONZE FINISH, 120V MFR:: LITHONIA AS2 250M SR4W 120-SCWA-SF, KIM, MCGRAW EDISON	300	1	250	PSMH	208	POLE	1
SB	SAME AS TYPE "SA" WITH TWO (2) LIGHTS INSTALLED ON ONE (1) POLE MFR:: LITHONIA AS2 250M SR4W 120-SCWA-SF	600	2	250	PSMH	208	POLE	1
SC	MINI-FLOOR LIGHT, DIE-CAST ALUMINUM HOUSING, REMOVAL FRONT BEZEL, SHOCK RESISTANT CLEAR TEMPERED GLASS LENS, HIGH EFFICIENCY OPTICS, 100W MH VERTICALLY MOUNTED LAMP, PULSE START BALLAST, FUSED, TENON SLIPFITTING FOR GROUND MOUNTING MFR: LITHONIA TFM 100M TA 120-SFSCWA, DAY-BRITE, COLUMBIA	120	1	100	PSMH	120	GROUND	-
2 SD	NOT USED	-	-	-	-	-	-	
SE	42" WALKWAY BOLLARD, COMPANION TO THE TYPE "SA" FIXTURE. EXTRUDED ALUMINUM, TOP COVER, SPUM ALUMINUM FLARED CONE AND HYDROFORMED UPPER REFLECTOR PROVIDING TYPE V DISTRIBUTION, DARK BRONZE HOUSING UV STABALIZED ACRYLIC LENS, 70W MH LAMP MFR: LITHONIA ASBX 70M-R5-120	84	1	70	MH	120	GROUND	2

NOTES:

1. THE POLE SHALL BE A DIRECT BURIAL POLE 25' AFG. PROVIDE LUMINAIRE ARM MOUNTING FITTINGS FOR SELECTED POLE. POLE SHALL MEET LOCAL MAXIMUM WIND CONDITIONS WITH LUMINAIRES INSTALLED.
2. USE MANUFACTURER FURNISHED MOUNTING TEMPLATE FOR BOLT CONFIGURATION OF POLE BASE.

NO SCALE

DRAWING NO.

ESK E1.0-1

PROJECT TITLE: PAISLEY FIRE STATION

SHEET TITLE: PARTIAL PLAN SHEET E1.0

DRAWN BY: MEB | CHECKED BY: RRC

DATE: 03-17-09 | 2 ADD #2

OCI ASSOCIATES, INC.
CONSULTING ENGINEERS
Orlando Ft. Pierce · West Palm Beach Ft. Myers
427 Centerpointe Circle, Suite 1825
Altamonte Springs, FL 32701
(407) 332-5110 Fax: (407) 332-7704
www.ociassociates.com
CERTIFICATE OF AUTHORIZATION #6261

KEYNOTES [X]:

1. REFER TO ELECTRICAL RISER DIAGRAM DWG. NO. E4.1. FOR SERVICE LATERAL SIZE.
2. REFER TO TELEPHONE/TELEVISION RISER DIAGRAM.
3. PARKING/DRIVE LIGHTING CONTROLLED BY TIME-CLOCK AND PHOTOCELL THRU LIGHTING CONTACTOR WITH MANUAL OVER-RIDE SWITCH. SET TIME CLOCK FOR OFF AT 11:00PM AND ON AT 6:00AM OR AS DIRECTED BY OWNER. FROM 6:00AM TO 11:00 PM THE PHOTOCELL WILL CONTROL THE LIGHTING. (2)
4. REFER TO TELEPHONE/TELEVISION RISER DIAGRAM. TRAFFIC SIGNAL CONTROL: PROVIDE (1) 2" CONDUIT FROM HAND HOLE AT FROM STREET CURB TO PULL BOX IN APPARATUS BAY.
5. TRAFFIC SIGNAL CONTROL: PROVIDE 1" CONDUITS FROM PULL BOX TO (A) LOCATION OF DISPATCH RADIO AND (B) ELECT/TELE ROOM.
6. LIGHTING CONTROL FOR FLAG LIGHT THROUGH PHOTOCELL ONLY.

GENER

A. ALL CONDUIT SH
PARKING AND R
B. PROVIDE PERMA
LOCATION INDIC
C. MAKE ALL SPLIC
D. COORDINATE WI
TRANSFORMER.
E. WHERE CONDUIT
FOR DIAGRAMMA
REPRESENTATIVE
DISCIPLINES PRI
F. INSTALL ALL PO
4'-6' FROM CUR

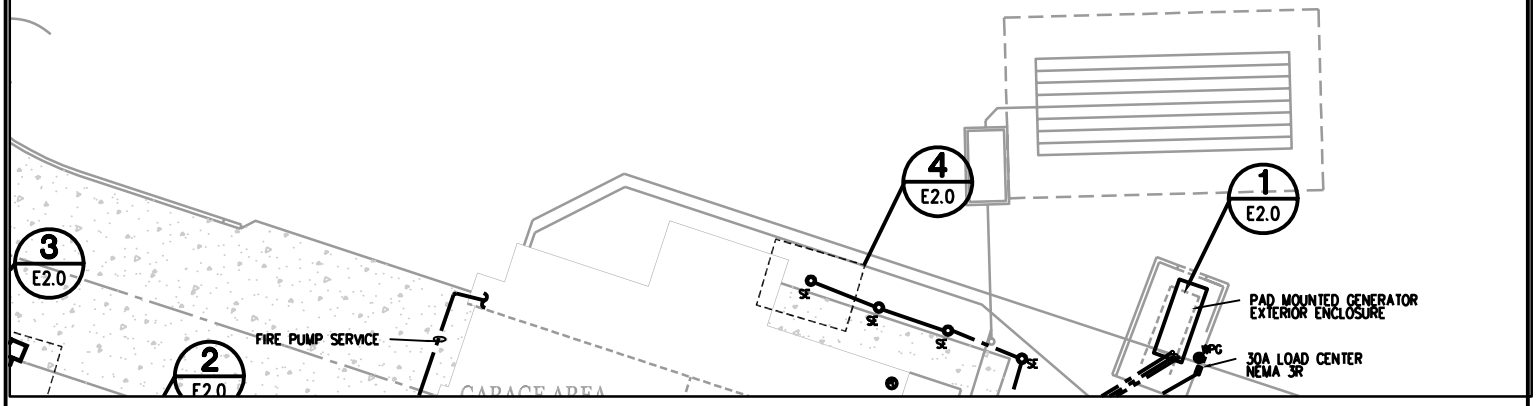

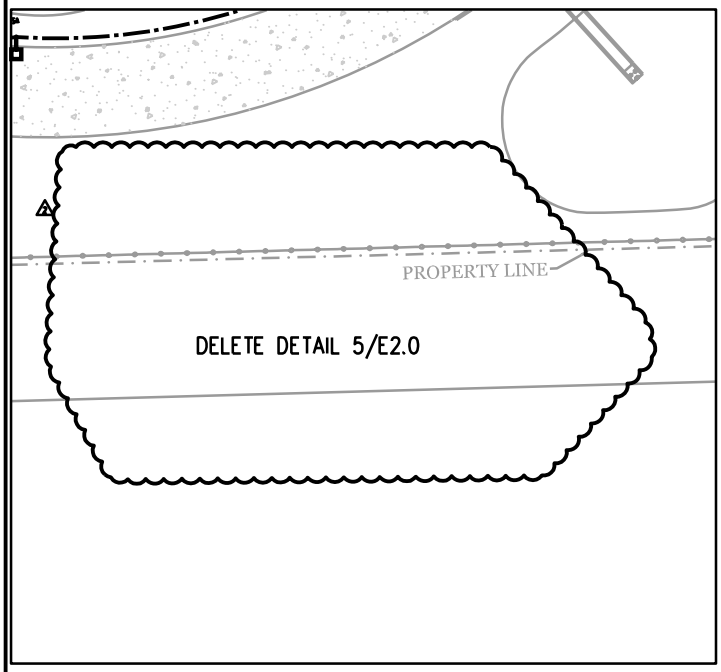

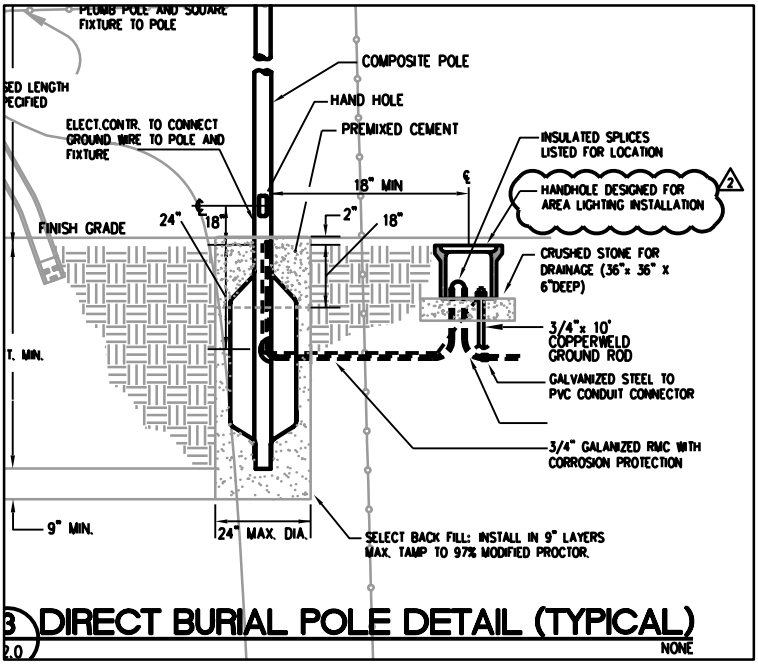

3 DIRECT BURIAL POLE DETAIL (TYPICAL)
E2.0 NONE

NO SCALE

DRAWING NO.	PROJECT TITLE: PAISLEY FIRE STATION	
ESK E2.0-4	SHEET TITLE: PARTIAL PLAN SHEET E2.0	
	DRAWN BY: MEB	CHECKED BY: RRC
	DATE: 03-17-09	(2) ADD #2

OCI ASSOCIATES, INC.
CONSULTING ENGINEERS
Orlando Ft. Pierce · West Palm Beach Ft. Myers
427 Centerpointe Circle, Suite 1825
Altamonte Springs, FL 32701
(407) 332-5110 Fax: (407) 332-7704
www.ociassociates.com
CERTIFICATE OF AUTHORIZATION #6261

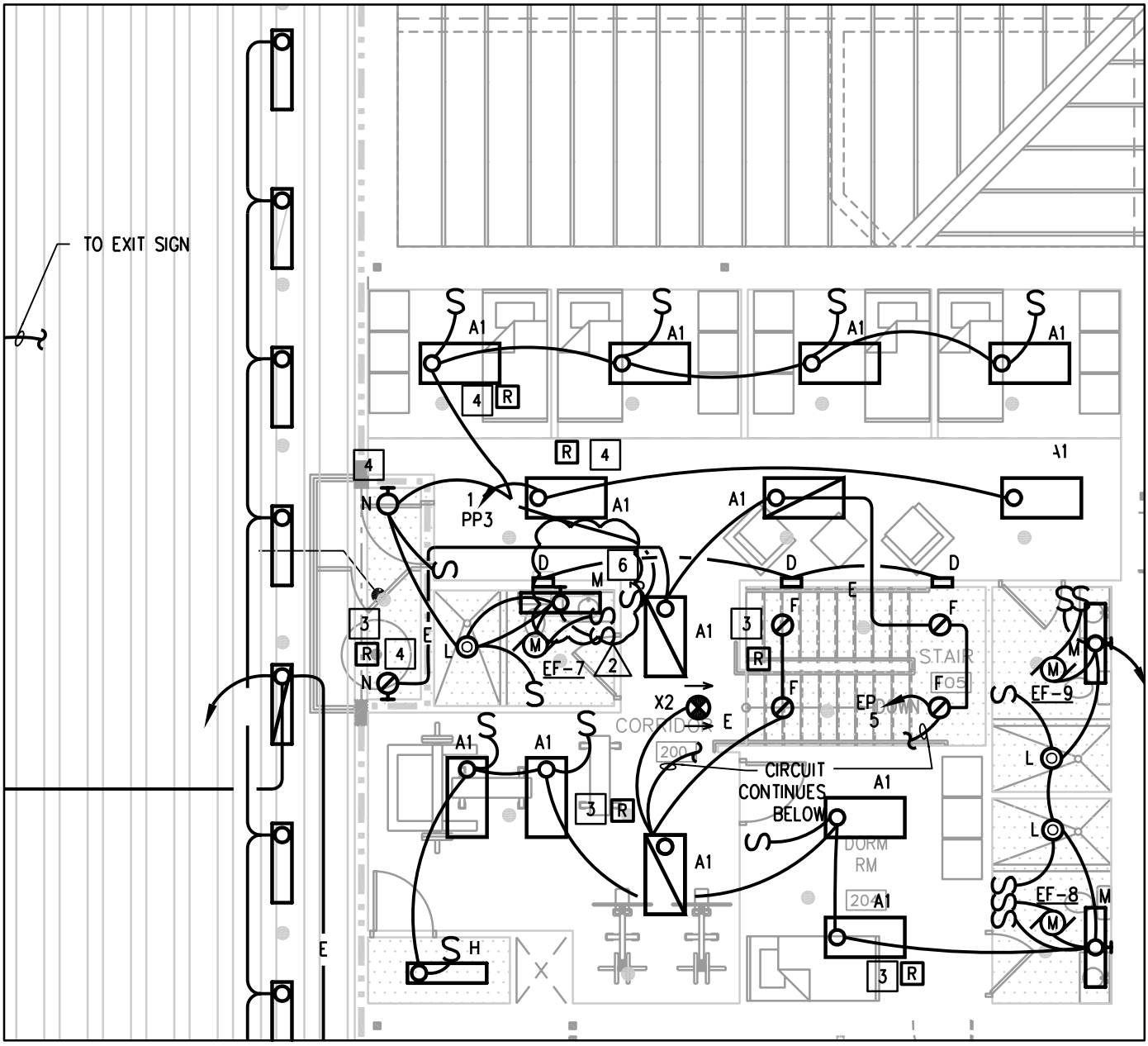

NO SCALE

DRAWING NO.	PROJECT TITLE: PAISLEY FIRE STATION	
ESK E3.0-1	SHEET TITLE: PARTIAL PLAN SHEET E3.0	
	DRAWN BY: MEB	CHECKED BY: RRC
	DATE: 03-17-09	2 ADD #2

OCI ASSOCIATES, INC.
CONSULTING ENGINEERS
Orlando Ft. Pierce · West Palm Beach Ft. Myers
427 Centerpointe Circle, Suite 1825
Altamonte Springs, FL 32701
(407) 332-5110 Fax: (407) 332-7704
www.ociassociates.com
CERTIFICATE OF AUTHORIZATION #6261

OUTPUT. (TYP.)

5 JUNCTION BOX FOR CO SENSOR, WIRING TO CONTACTOR. 2

6 JUNCTION BOX AT NORMAL LIGHT SWITCH HEIGHT FOR LOCAL AREA SPEAKERS VOLUME CONTROL, CONDUIT STUBBED OUT UP ABOVE DROP CEILING.

THRU).

8 PROVIDE SUPPORT AND MOUNTING OF ANTENNA BY OTHERS. 2

9 COORDINATE LOCATION OF DUCT MOUNTED SMOKE DETECTORS WITH MECHANICAL.

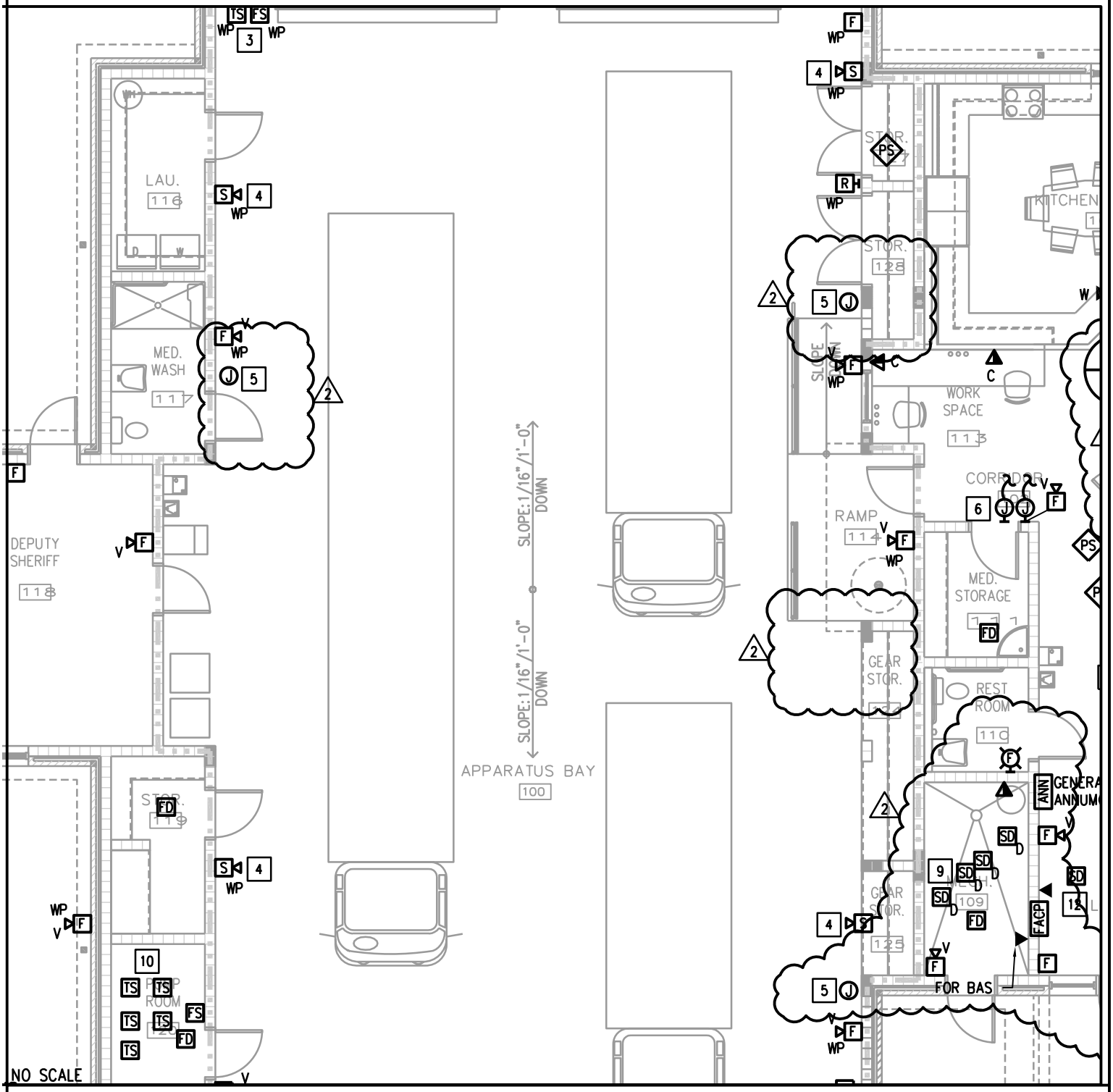

DRAWING NO.	PROJECT TITLE: PAISLEY FIRE STATION	
ESK E3.2-2	SHEET TITLE: PARTIAL PLAN SHEET E3.2	
	DRAWN BY: MEB	CHECKED BY: RRC
	DATE: 03-17-09	2 ADD #2

OCI ASSOCIATES, INC.
CONSULTING ENGINEERS
Orlando Ft. Pierce • West Palm Beach Ft. Myers
427 Centerpointe Circle, Suite 1825
Altamonte Springs, FL 32701
(407) 332-5110 Fax: (407) 332-7704
www.ociassociates.com
CERTIFICATE OF AUTHORIZATION #6261

B. (1) TELEPHONE AND (1) DATA OUTLET, SHOWN A COMBINATION TEL/DATA OUTLET ON PLAN, SHALL HAVE 3/4" CONDUIT STUBBED-UP 6" ABOVE THE CEILING. RUN CAT 6 CABLE TO TELEPHONE CLOSET. TERMINATE DATA ON PATCH PANEL AND VOICE ON THE 110 BLOCKS 2

C. MAINTAIN 3 FT. MINIMUM SEPARATION BETWEEN HVAC DIFFUSER AND SMOKE DETECTORS.

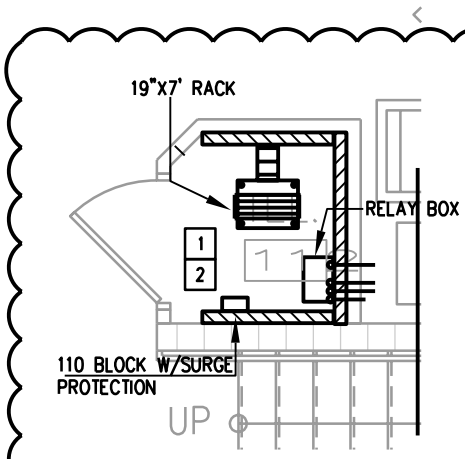

2 E3.2 ENGARGED COMM. ROOM
SCALE: 1/4" = 1'-0"

2

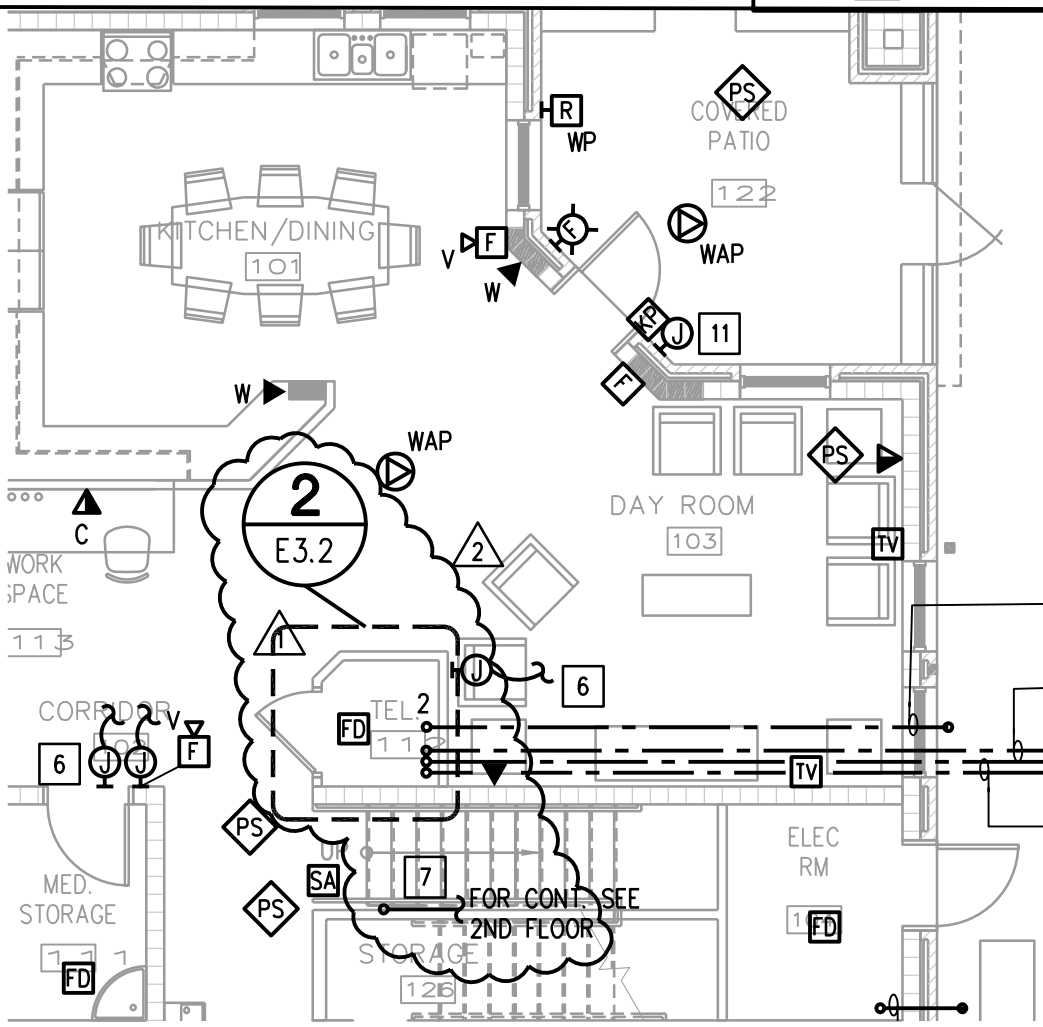

(1) 3"C, STUB UP, CAP AT BOTH ENDS AND LABEL "SPARE"

(1) 3"C TO CATV OR DISH, (FOR CONT. SEE DWG. NO. E2.0 1

(2) 4"C TO SPRINT SERVICE BOX (FOR CONT. SEE DWG. NO. E2.0)

ESK E3.2-3	PAISLEY FIRE STATION SHEET TITLE: PARTIAL PLAN SHEET E3.2	OCI ASSOCIATES, INC. CONSULTING ENGINEERS Orlando Ft. Pierce • West Palm Beach Ft. Myers 427 Centerpointe Circle, Suite 1825 Altamonte Springs, FL 32701 (407) 332-5110 Fax: (407) 332-7704 www.ociassociates.com CERTIFICATE OF AUTHORIZATION #6261
	DRAWN BY: MEB / CHECKED BY: RRC	
	DATE: 03-17-09 / 2 ADD #2	

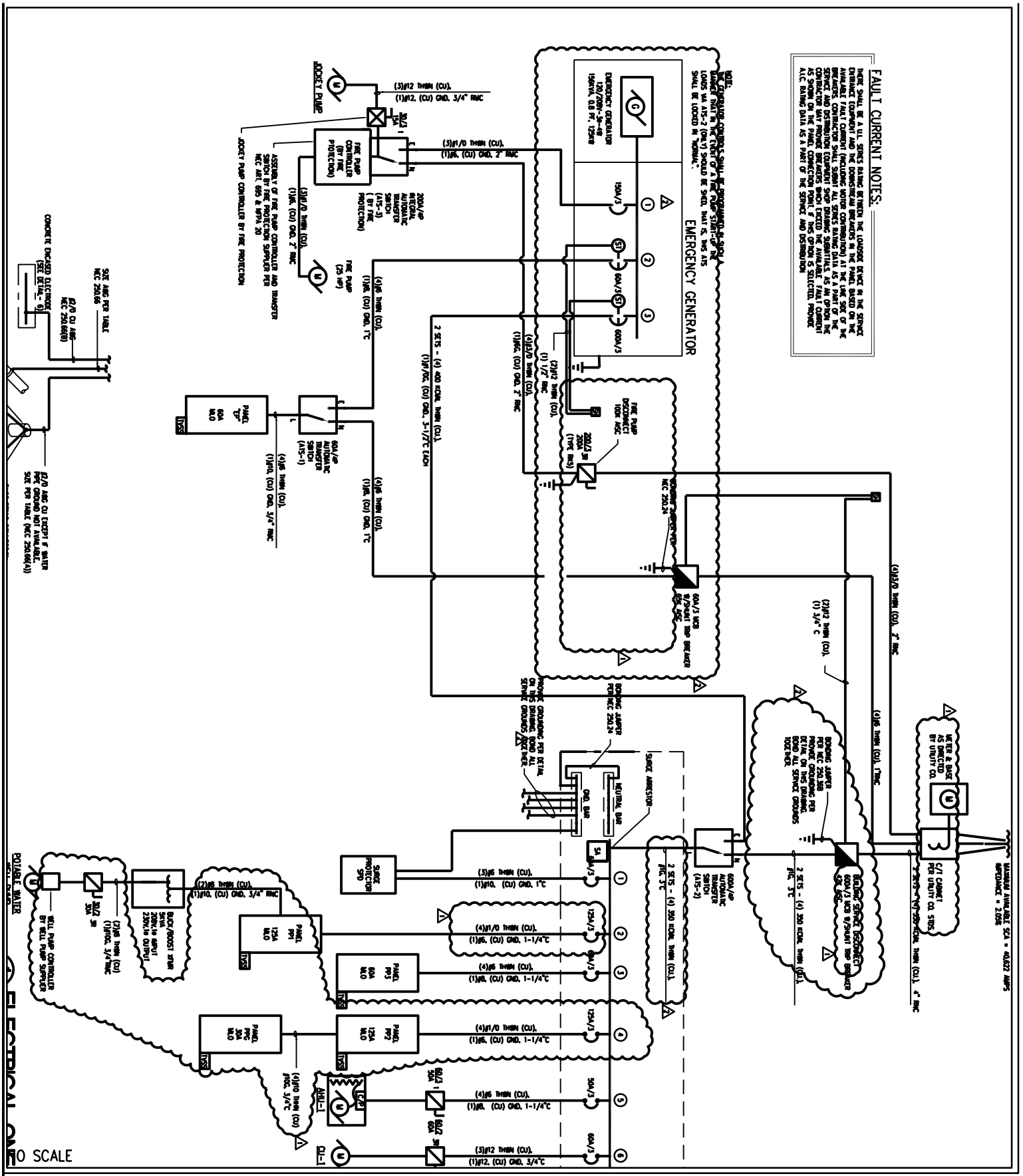

DRAWING NO.	PROJECT TITLE: PAISLEY FIRE STATION	
ESK E4.0-3	SHEET TITLE: PARTIAL PLAN SHEET E4.0	
	DRAWN BY: MEB	CHECKED BY: RRC
	DATE: 03-17-09	2 ADD #2

Orlando Ft. Pierce · West Palm Beach Ft. Myers
427 Centerpointe Circle, Suite 1825
Altamonte Springs, FL 32701
(407) 332-5110 Fax: (407) 332-7704
www.ociassociates.com
CERTIFICATE OF AUTHORIZATION #6261

22,000
FACE

SCRIPTION

CONTROL

ROLLER

ER
EVICE
BREAKER

CALCULATIONS:

PANEL PP2

LOCATION ELECTRIC RM
-

SERVICE 120/208V-3Ø-4W
RATING 125A MLO

MINIMUM BREAKER AIC 22,000
MOUNTING SURFACE

LOAD DESCRIPTION	BKR TRIP	BKR POLES	KVA ØA	KVA ØB	KVA ØC	CKT. NO.		KVA ØA	KVA ØB	KVA ØC	BKR TRIP	BKR POLES	LOAD DESCRIPTION
R-DATA	20	1	0.36			1	2	1.00			20	1	A-FRIDGE
R-AMP/PAGER	20	1		0.80		3	4		0.80		20	1	A-HOOD/MICROWAVE
R-DISPATCH RELAY BOX	20	1			1.00	5	6			4.50	50	2	A-RANGE
E-BAS	20	1	0.50			7	8	4.50					A-
E-EWC (G)	20	1		0.50		9	10		0.80		20	1	A-DISPOSAL
L-KITCHEN	20	1			1.20	11	12			0.72	20	1	R-APPLIANCE
L-DAY ROOM/TEL./RM. 106	20	1	0.64			13	14	1.20			20	1	A-DISHWASHER
L-RM. 109/110/111/113	20	1		0.62		15	16		0.72		20	1	R-APPLIANCE
E-WATER SOFTENER	15	1			0.50	17	18			1.00	20	1	H-HEAT TRACE
E-COMM.	20	1	0.36			19	20	1.00			20	1	H-HEAT TRACE
E-COMM.	20	1		0.36		21	22		0.90		20	1	R-DAY RM.
E-DOORBELL	20	1			0.50	23	24			0.50	20	1	E-XFMR ZD1-1 TO 6
R-RM 113	20	1	1.08			25	26	0.72			20	1	R-EXTERIOR
E-AHU-1 CONTROLLER	20	1		0.50		27	28		0.90		20	1	R-RM 111, 107,108
E-AHU-2 CONTROLLER	20	1			0.50	29	30			0.54	20	1	R-RM. 107
R-ELEC RM. 104	20	1	0.36			31	32	0.72			20	1	R-RM. 106
E-RADIO CTRL. CAB	20	1		1.50		33	34		0.60		20	1	SPARE
SPARE	20	1			0.60	35	36			0.60	20	1	SPARE
O-PANEL PPG	30	3	2.95			37	38	0.00			30	3	O-SPD
O-				2.57		39	40		0.00				O-
O-					1.84	41	42			0.00			O-
TOTALS			6.25	6.85	6.14			9.14	4.72	7.86			

LOAD CALCULATIONS:	CONN. LOAD - KVA	D.F.	CALC. DEMAND - KVA
LIGHTING	2.46	1.25	3.08
RECEPTACLES - 1ST 10 KVA	8.82	1.00	8.82
RECEPTACLES - ABOVE 10 KVA	0.00	0.50	0.00
HVAC	2.00	1.00	2.00
MOTORS	0.00	1.00	0.00
EQUIPMENT	5.72	1.00	5.72
APPLIANCE (KITCHEN 5 UNITS)	12.80	0.70	8.96
SPARE/SPACE	1.80	1.00	1.80
OTHER	7.36	1.00	7.36
TOTAL KVA (AMPS)	40.96 (113.69)		37.74 (104.74)

LOADS NOT INCLUDED IN CALCULATIONS:
0.00

NOTES:
(G) PROVIDE GFCI BREAKER
(L) PROVIDE LOCK-ON DEVICE
(S) PROVIDE SHUNT TRIP BREAKER

PAN
LOCATION

LOAD
L-FS DORM
L-RM. 205,
E-NON-SY
R-RM204,2
SPARE
SPARE
SPARE
SPARE
SPACE
SPACE
TOTALS
LOAD CALC
LIGHTING
RECEPTACL
RECEPTACL
HVAC
MOTORS
EQUIPMENT
APPLIANCE
SPARE/SPA
OTHER
TOTAL KVA

22,000
FACE
NO SCALE

RICHARD R. CREAVALLE
427 CENTERPOINTE CIR., SUITE 1825
ALTAMONTE SPRINGS, FL 32701
FL. REG. NO.: PE59885

DRAWING NO.
ESK
E4.1-4

PROJECT TITLE:
PAISLEY FIRE STATION

SHEET TITLE:
PARTIAL PLAN SHEET E4.1

DRAWN BY: MEB
CHECKED BY: RRC
DATE: 03-17-09
ADD #1

OCI ASSOCIATES, INC.
CONSULTING ENGINEERS
Orlando Ft. Pierce · West Palm Beach Ft. Myers
427 Centerpointe Circle, Suite 1825
Altamonte Springs, FL 32701
(407) 332-5110 Fax: (407) 332-7704
www.ociassociates.com
CERTIFICATE OF AUTHORIZATION #6261

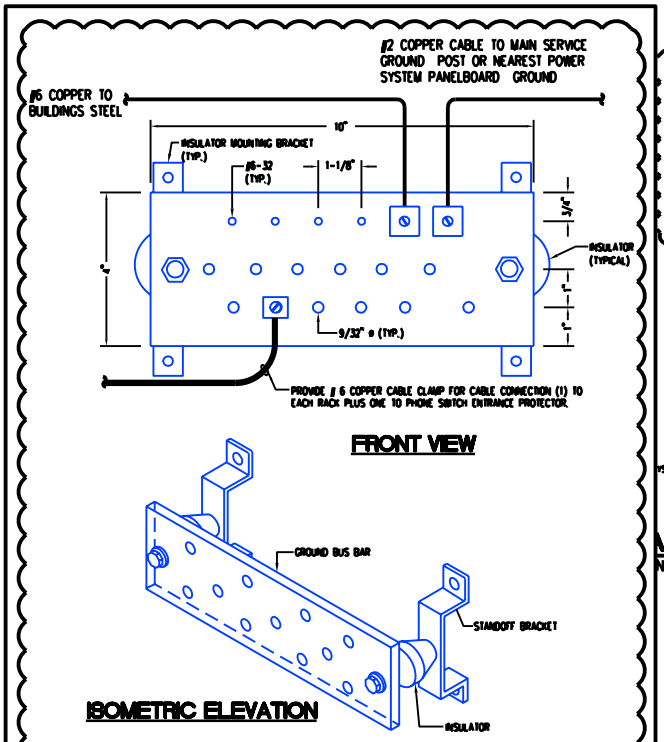

9 E5.0 GROUND BUS BAR

SCALE: N.T.S.

SYSTEMS GROUNDING HEX NOTES

1. SYSTEMS GROUND BUS BAR. SEE DETAIL.
2. #6 INSULATED COPPER GROUND WIRE. CONNECT TO SYSTEMS GROUND BUS BAR. SEE DETAIL.
3. SYSTEMS TERMINAL BOARD. CLASS A/C PLYWOOD BACKBOARD PAINTED WITH GRAY FIRE RESISTANT PAINT (FLAME SPREAD CLASS A). SIZE AS SHOWN ON PLANS. MINIMUM SIZE TO BE 3/4" X 8FT (H) X 4FT (W).
4. ALL EQUIPMENT RACKS AND CABINETS, METAL CONDUIT ENDS (VIA GROUNDING BUSHING), ALL CABLE SHIELDS, AND ALL SURGE SUPPRESSION EQUIPMENT SHALL BE PROPERLY CONNECTED TO SYSTEMS GROUND BUS BAR WITH #6 AWG GREEN INSULATED COPPER GROUND WIRE.
5. #2/0 GROUND WIRE TO BUILDING'S POWER SYSTEM GROUND OR NEAREST PANELBOARD GROUND BUS.
6. #6 AWG TO BUILDING STEEL.

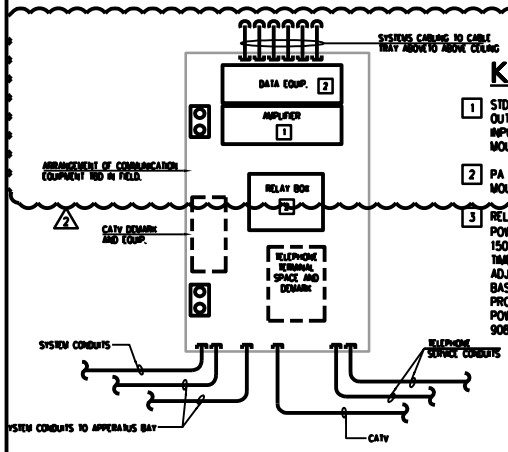

KEYNOTES X:

1. STD. AUDIO AMPLIFIER FOR PAGING, USE 100W (MIN.) RATED OUTPUT ON 70V LINE. HIGH AND LOWER LEVEL MICROPHONE INPUTS AND LOW LEVEL LINE. PROVIDE WITH SHELF FOR MOUNTING AND POWER CORD.
2. PA AMPLIFIER, PATCH PANEL FOR DATA AND PHONE, MOUNTED ON RACK.
3. RELAY BOX CONTAINING AN ON BOX MOUNTED CONTROL POWER AT TRANSFORMER 120V/24V AC WITH TAPS RATED 150VA MINIMUM. INSTALL GENERAL PURPOSE PLUG-IN TIMERS, ONE ADJUSTABLE FROM 0.1-10 SECONDS, TWO ADJUSTABLE FROM 0.6 TO 60 SECONDS, ALL COMPLETE WITH BASE. SIMILAR TO SQUARE D TYPE JCK CLASS 9050. PROVIDE SECONDARY FUSE BLOCK FOR THREE CONTROL POWER FUSES RATED AT 3A. SIMILAR TO SQUARE D CLASS 9080 TYPE GF1 BOX SIMILAR TO HOFFMAN C-SD20206.

4 E5.0 ELEVATION AT TTB

SCALE: N.T.S.

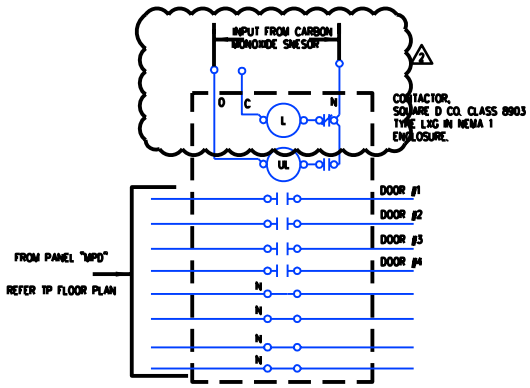

6 E5.0 BAY DOOR CONTACTOR DETAIL

SCALE: NTS

NO SCALE

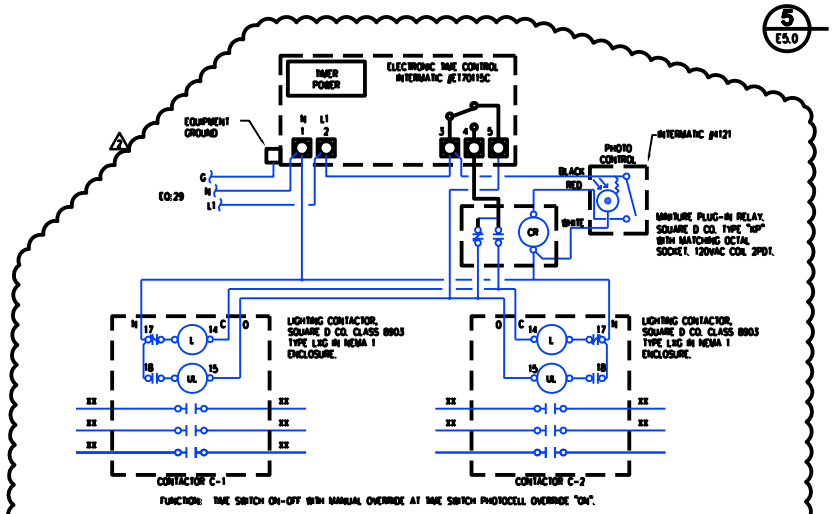

7 E5.0 CONTACTOR AND PHOTOCELL/TIMECLOCK DETAIL

N.T.S.

DRAWING NO.	PROJECT TITLE: PAISLEY FIRE STATION	
ESK E5.0-1	SHEET TITLE: PARTIAL PLAN SHEET E5.0	
	DRAWN BY: MEB	CHECKED BY: RRC
	DATE: 03-17-09	2 ADD #2

OCI ASSOCIATES, INC.
CONSULTING ENGINEERS
Orlando Ft. Pierce • West Palm Beach Ft. Myers
427 Centerpointe Circle, Suite 1825
Altamonte Springs, FL 32701
(407) 332-5110 Fax: (407) 332-7704
www.ociassociates.com
CERTIFICATE OF AUTHORIZATION #6261

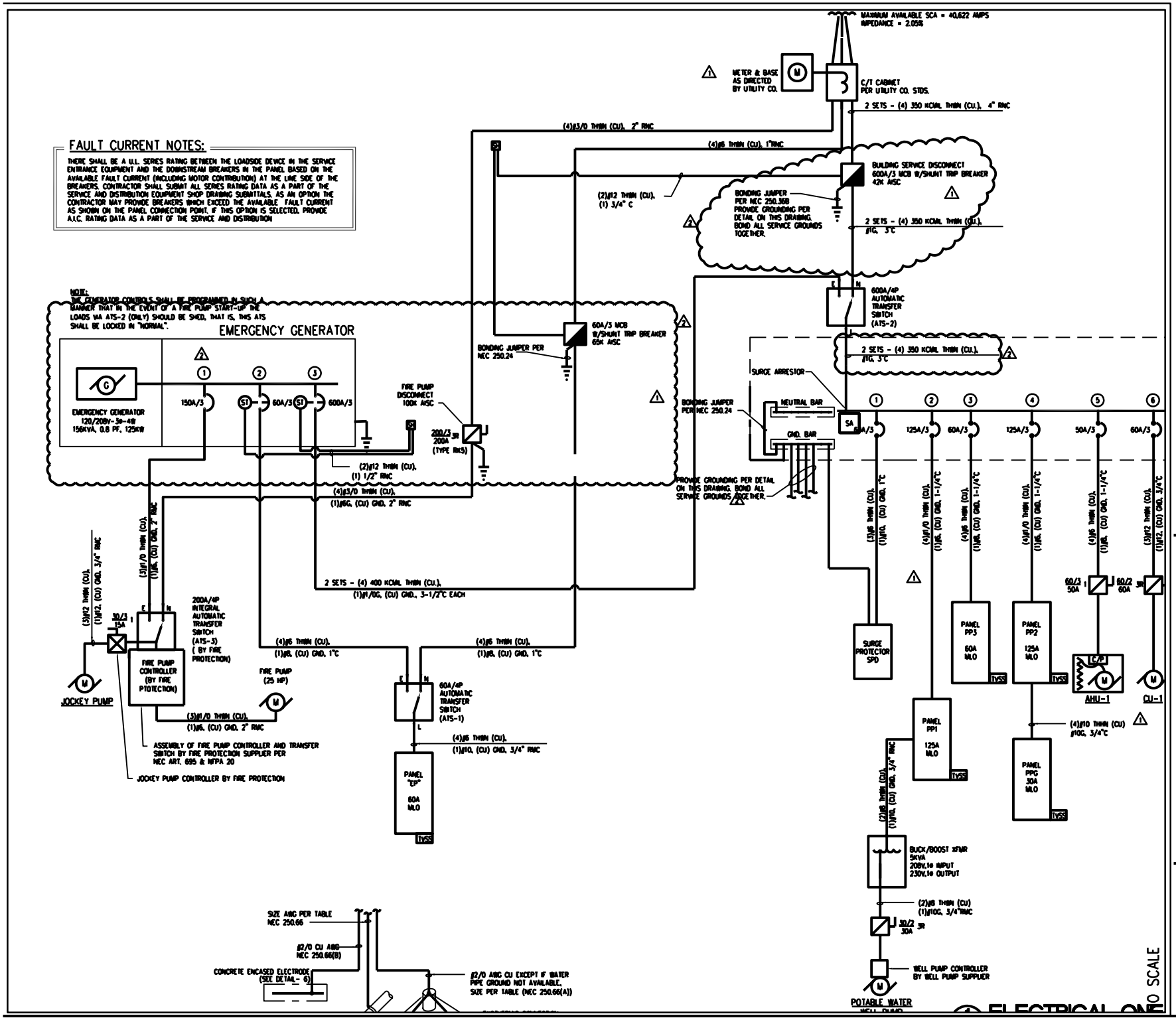

Orlando Ft. Pierce • West Palm Beach Ft. Myers
427 Centerpointe Circle, Suite 1825
Altamonte Springs, FL 32701
(407) 332-5110 Fax: (407) 332-7704
www.ociassociates.com
CERTIFICATE OF AUTHORIZATION #6261

PROJECT TITLE: PAISLEY FIRE STATION

SHEET TITLE: PARTIAL PLAN SHEET E4.0

DRAWN BY: MEB | CHECKED BY: RRC

DATE: 03-17-09 | 2 ADD #2

DRAWING NO. ESK E4.0-3

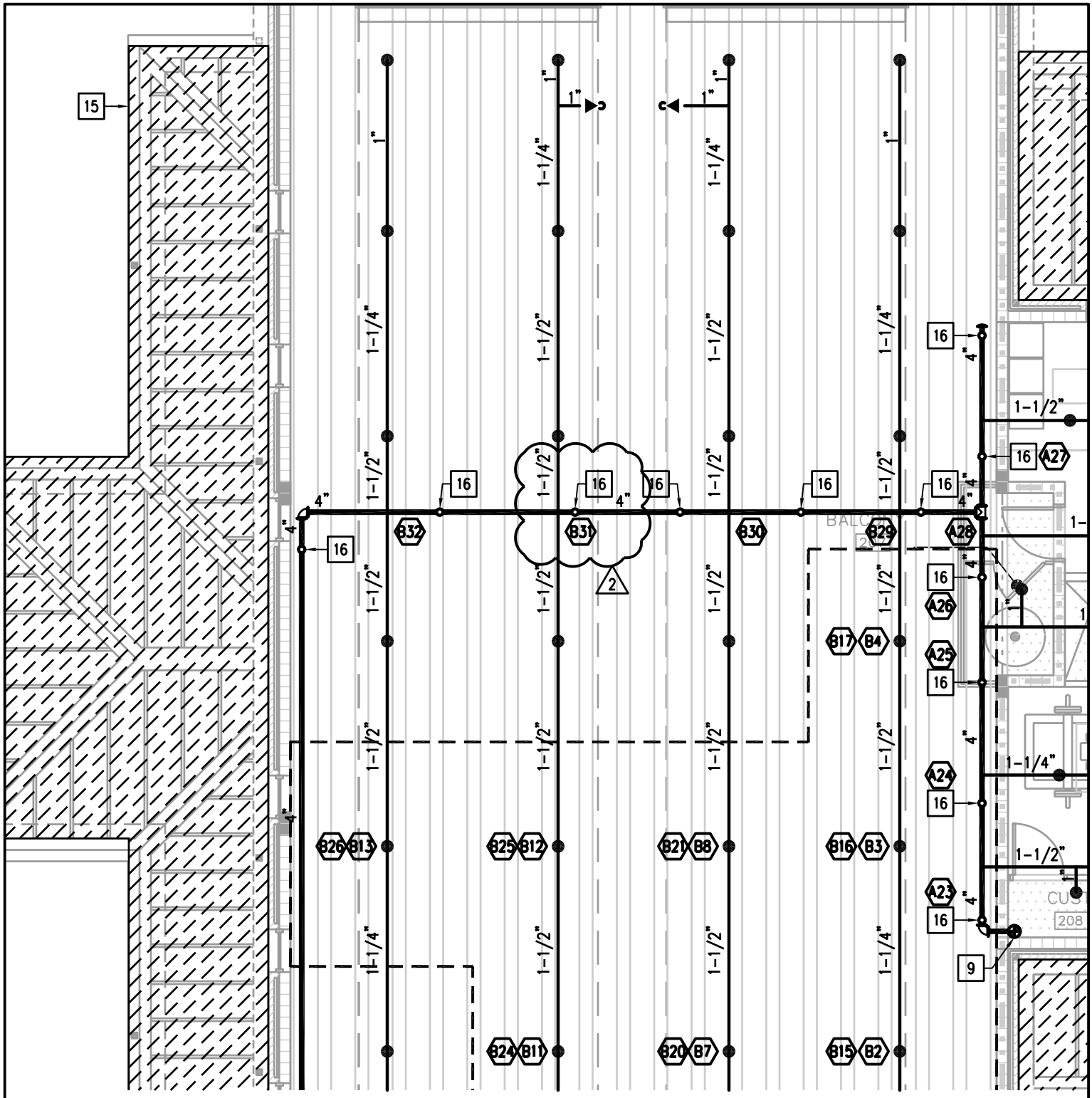

JASON L. SMITH, P.E.
427 CENTERPOINTE CIR., SUITE 1825
ALTAMONTE SPRINGS, FL 32701
FL. REG. NO.: PE57743

SCALE: 1/X" = 1'-0"

DRAWING NO.	PROJECT TITLE: MARION COUNTY PAISLEY FIRE STATION	
FSK 2.1-1	SHEET TITLE: SECOND FLOOR PLAN - FIRE PROTECTION	
	DRAWN BY: RC	CHECKED BY: KK
	DATE: 03/17/09	2 ADDENDUM #2

OCI ASSOCIATES, INC.
CONSULTING ENGINEERS
Orlando Ft. Pierce · West Palm Beach Ft. Myers
427 Centerpointe Circle, Suite 1825
Altamonte Springs, FL 32701
(407) 332-5110 Fax: (407) 332-7704
www.ociassociates.com
CERTIFICATE OF AUTHORIZATION #6261

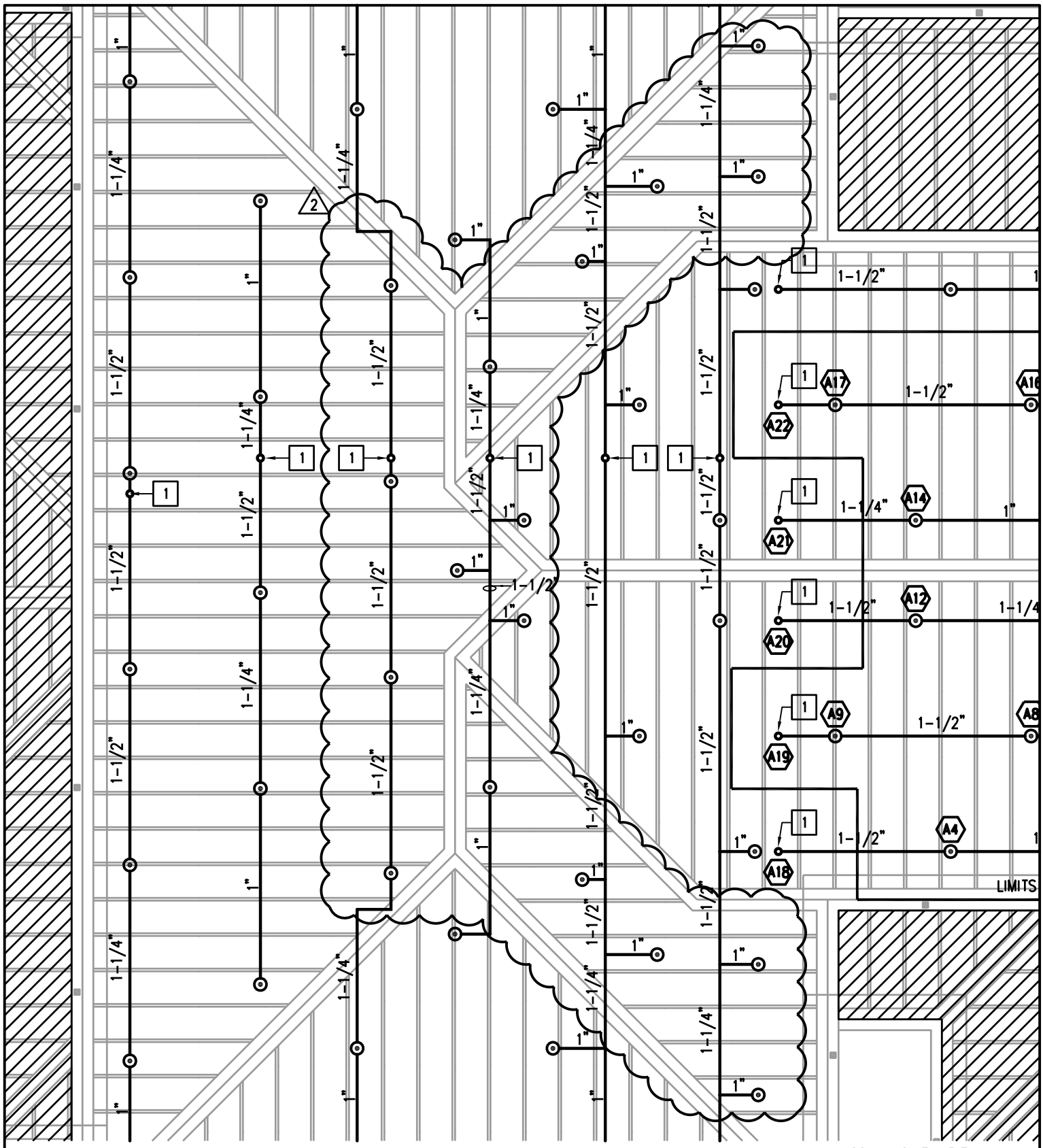

SCALE: 1/8" = 1'-0"

JASON L. SMITH, P.E.
427 CENTERPOINTE CIR., SUITE 1825
ALTAMONTE SPRINGS, FL 32701
FL. REG. NO.: PE57743

DRAWING NO.	PROJECT TITLE: MARION COUNTY PAISLEY FIRE STATION	
FSK 2.2-1	SHEET TITLE: ROOF PLAN - FIRE PROTECTION	
	DRAWN BY: RC	CHECKED BY: KK
	DATE: 03/17/09	2 ADDENDUM #2

OCI ASSOCIATES, INC.
CONSULTING ENGINEERS
Orlando Ft. Pierce · West Palm Beach Ft. Myers
427 Centerpointe Circle, Suite 1825
Altamonte Springs, FL 32701
(407) 332-5110 Fax: (407) 332-7704
www.ociassociates.com
CERTIFICATE OF AUTHORIZATION #6261

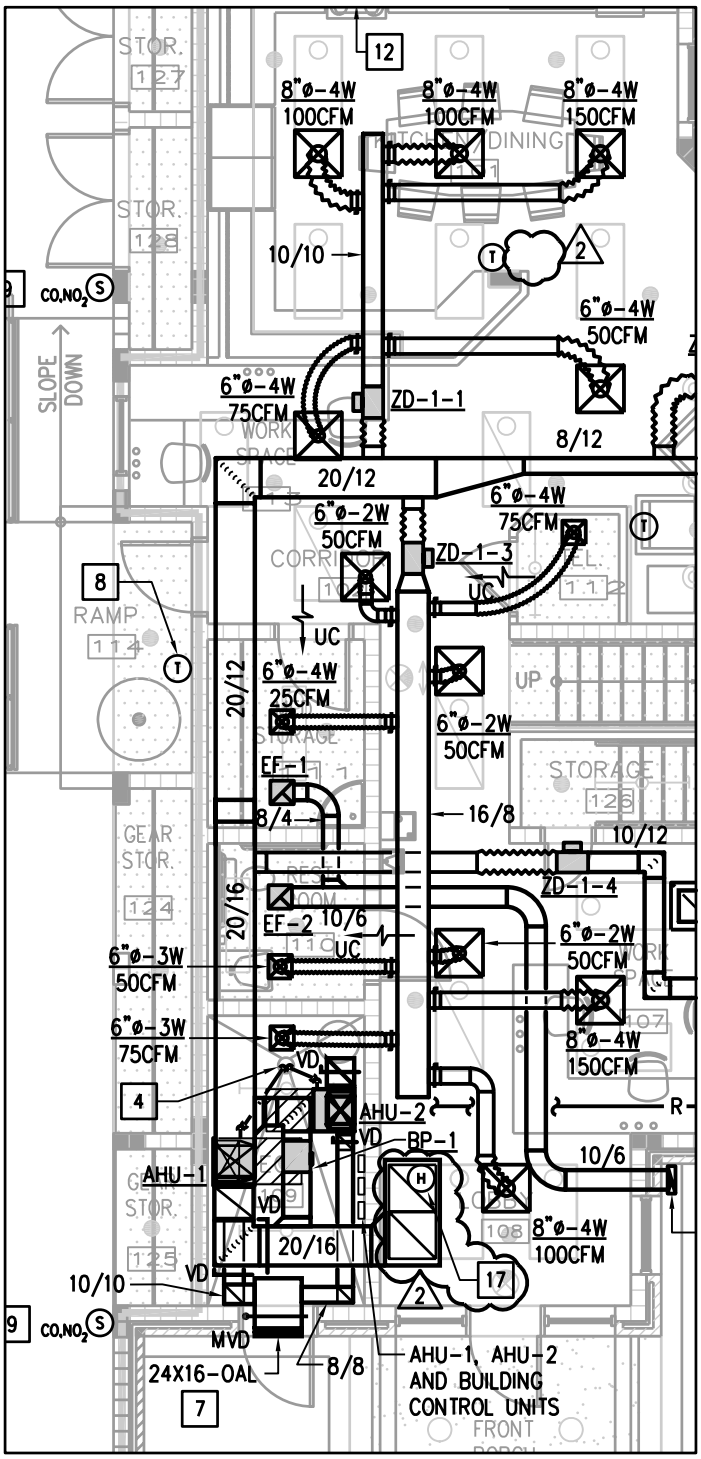

H.V.A.C. KEYNOTES:

15 ROUTE 14/14 SUPPLY/RETURN DUCTS DOWN IN SHAFT TO FIRST FLOOR. REFER TO SHEET M1.1 FOR CONTINUATION.

16 ROUTE 4" ROUND DRYER VENT DUCT THROUGH EXTERIOR WALL AND TERMINATE WITH WALL CAP AT MINIMUM 12" ABOVE GRADE. COORDINATE EXACT LOCATION WITH ARCHITECT.

2 17 PROVIDE DUCT MOUNTED RELETIVE HUMIDITY SENSORS IN RETURN DUCTWORK FOR EACH SYSTEM UPSTREAM OF BYPASS DUCTWORK WHERE SHOWN ON FLOOR PLAN.

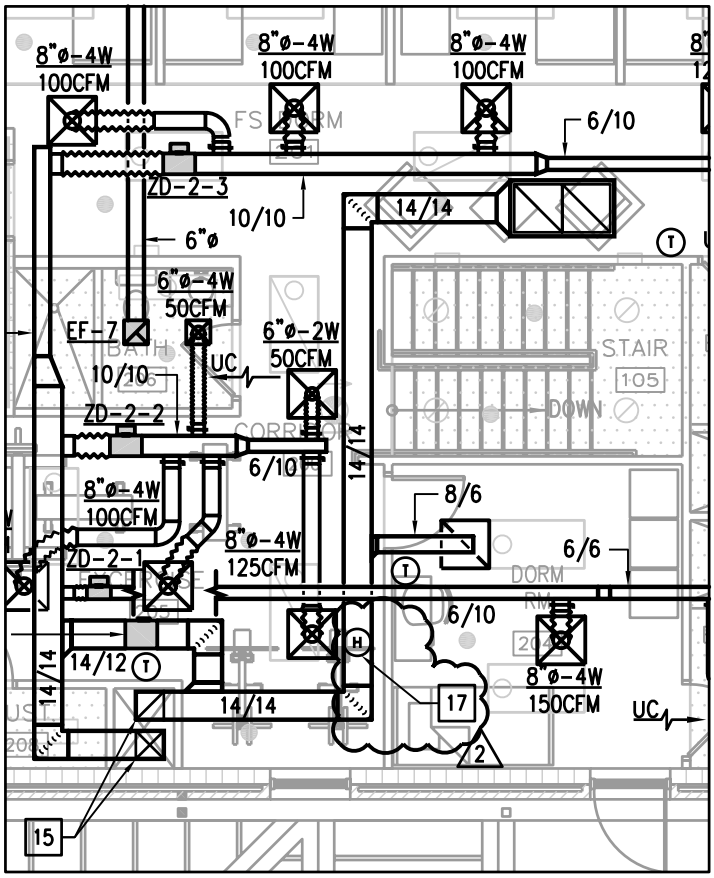

SCALE: 1/8" = 1'-0"

DRAWING NO.	PROJECT TITLE: PAISLEY FIRE STATION	
MSK 2.1-1	SHEET TITLE: PARTIAL PLAN SHEET M2.1	
	DRAWN BY: AA	CHECKED BY: JLS
	DATE: 03-17-09	2 ADD #2

OCI ASSOCIATES, INC.
CONSULTING ENGINEERS
Orlando Ft. Pierce • West Palm Beach Ft. Myers
427 Centerpointe Circle, Suite 1825
Altamonte Springs, FL 32701
(407) 332-5110 Fax: (407) 332-7704
www.ociassociates.com
CERTIFICATE OF AUTHORIZATION #6261

NO SCALE

CHANGE OVER BYPASS SYSTEM POINTS LIST

Unit Level	AI	AO	BI	BO
1. Fan Control			X	X
2. Cooling Stages				X
3. Heating Control				X
4. Bypass Damper		X		
5. Supply Air Temperature	X			
6. Supply Air Temperature Setpoint		X		
7. Supply Air Static Pressure	X			
8. Supply Air Static Pressure Setpoint		X		
9. Outside Air Damper				X
10. System Status			X	
11. RETURN AIR RELETIVE HUMIDITY	X			
12. MAXIMUM SPACE RELETIVE HUMIDITY SETPOINT		X		

Per Group of Zones	AI	AO	BI	BO
A. Maximun temperature	X			
B. Minimum temperature	X			
C. Average zone temperature	X			
D. Total flow	X			
E. Total heating flow	X			

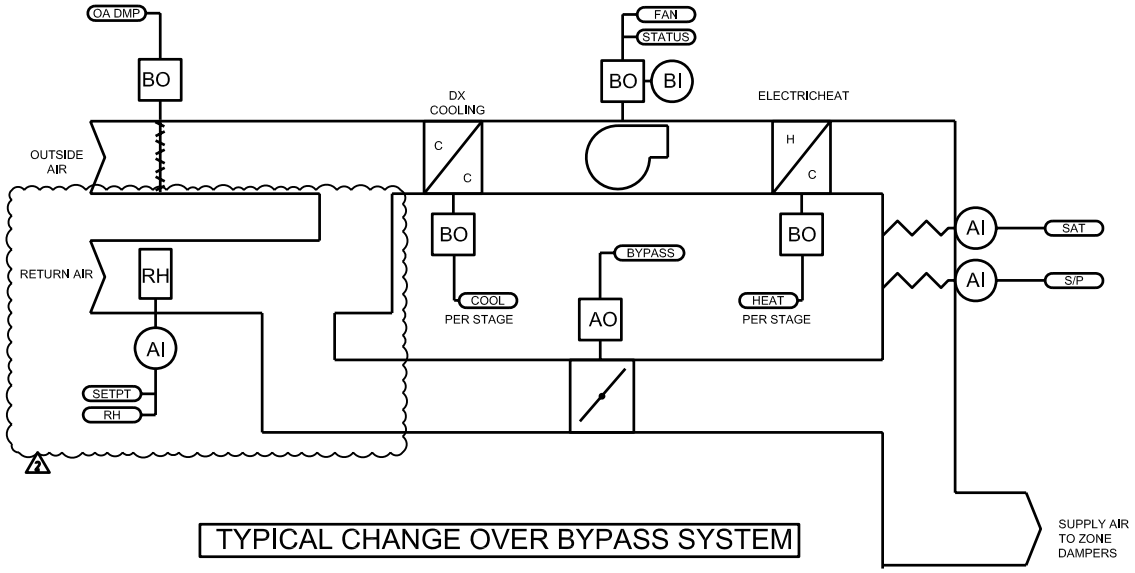

TYPICAL CHANGE OVER BYPASS SYSTEM

ZONE DAMPER POINTS LIST

Per Zone Damper	AI	AO	BI	BO
1. Zone temperature	X			
2. Occupied heating setpoint		X		
3. Occupied cooling setpoint		X		
4. NOT USED				
5. Maximum CFM setting		X		
6. Minimum CFM setting		X		
7. Unoccupied heating setpoint		X		
8. Unoccupied cooling setpoint		X		
9. Calibration				X
10. Override open				X
11. Timed override request from space			X	
12. Air Valve Position	X	X		

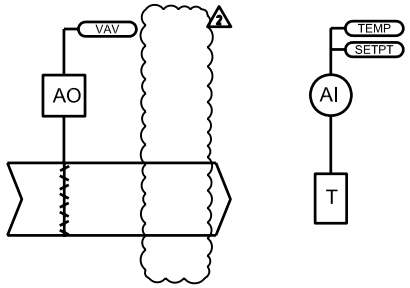

TYPICAL ZONE DAMPER

OCI ASSOCIATES, INC.
CONSULTING ENGINEERS
Orlando Ft. Pierce • West Palm Beach Ft. Myers
427 Centerpointe Circle, Suite 1825
Altamonte Springs, FL 32701
(407) 332-5110 Fax: (407) 332-7704
www.ociassociates.com
CERTIFICATE OF AUTHORIZATION #6261

PROJECT TITLE: PAISLEY FIRE STATION

SHEET TITLE: PARTIAL PLAN SHEET M3.1

DRAWN BY: AA

CHECKED BY: JLS

DATE: 03-17-09

2 ADD #2

DRAWING NO. MSK 3.1-1

PLUMBING FI

	WC-1	L-1	L-2	L-3	SH-1	SH-2	S-1
IPTION	WATER CLOSET FLOOR MTD. (1) (3)	LAVATORY COUNTERTOP 2	LAVATORY WALL HUNG (3)	LAVATORY WALL HUNG (3)	SHOWER	SHOWER (3)	SINK (3 COMP.) (10)
TURER	AMER. STD.	AMER. STD.	AMER. STD.	AMER. STD.	-	-	ELKAY
D.	2034.012	3409.403	0355.012	0954.000	-	-	4826EGT
IR	-	-	-	-	-	-	-
TURER	-	-	ZURN	ZURN	-	-	-
D.	-	-	Z1231	Z1231	-	-	-
VALVE	-	-	-	-	-	-	-
TURER	-	-	-	-	-	-	-
D.	-	-	-	-	-	-	-
Y FITTING	-	-	-	-	-	-	-
TURER	(2)	(2)	(2)	(2)	-	-	(2)
D.	-	-	-	-	-	-	-
	1	2	2	2	-	-	2
T	-	-	-	-	-	-	-
TURER	-	MOEN	MOEN	MOEN	MOEN	MOEN	MOEN
D.	-	L4701	L4701	L4601 (9)	8325	8346	S71709

JASON L. SMITH, P.E.
427 CENTERPOINTE CIR., SUITE 1825
ALTAMONTE SPRINGS, FL 32701
FL. REG. NO.: PE57743

SCALE: 1/X" = 1'-0"

DRAWING NO.
PSK 3.3-1

PROJECT TITLE: MARION COUNTY PAISLEY FS

SHEET TITLE: FIXTURE SCHEDULE - PLUMBING

DRAWN BY: KK | CHECKED BY: KK

DATE: 03/17/09 | 2 ADDENDUM #2

OCI ASSOCIATES, INC.
CONSULTING ENGINEERS
Orlando Ft. Pierce · West Palm Beach Ft. Myers
427 Centerpointe Circle, Suite 1825
Altamonte Springs, FL 32701
(407) 332-5110 Fax: (407) 332-7704
www.ociassociates.com
CERTIFICATE OF AUTHORIZATION #6261

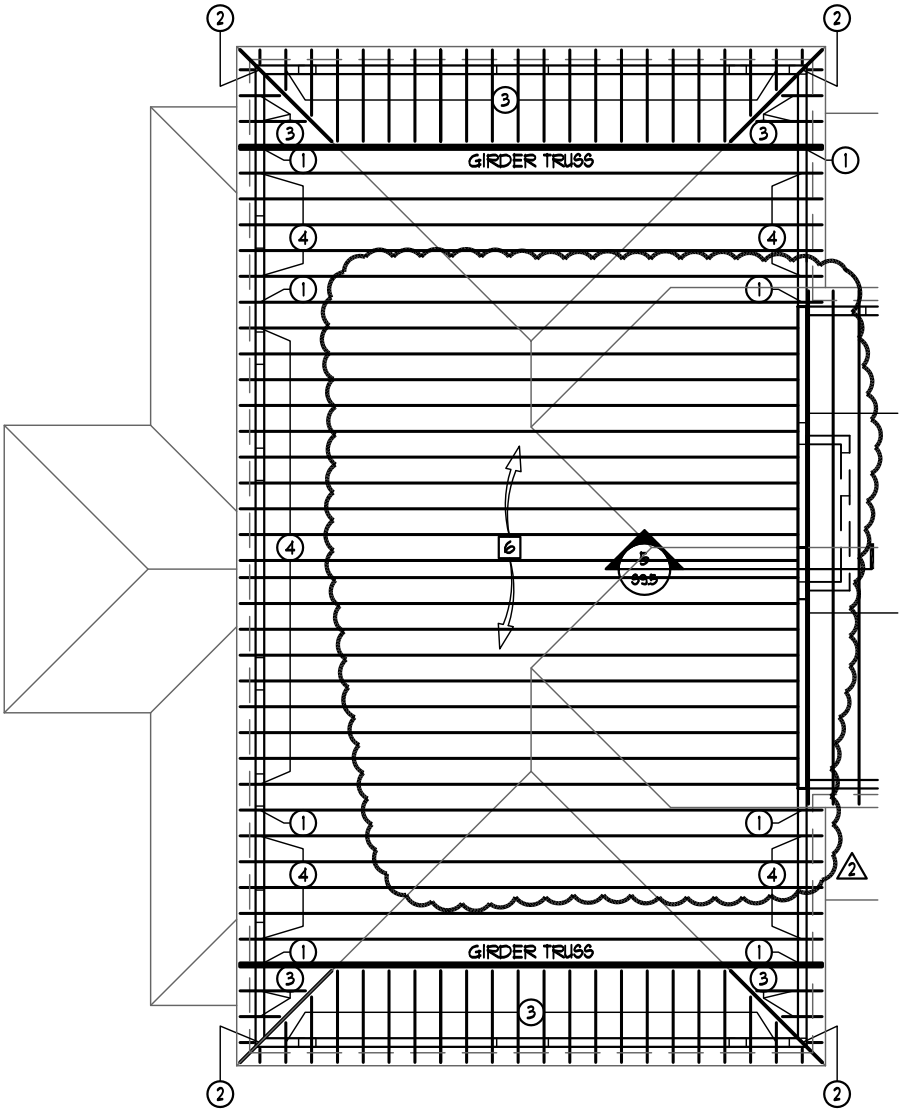

MITZO ENGINEERING, LLC
STRUCTURAL CONSULTANTS
670 NORTH ORLANDO AVE., SUITE 103A
MAITLAND, FLORIDA 32751
PHONE: (407) 644-1500
FAX: (407) 644-1562

Paisley Fire Station

Lake County, Florida

supplement to drawing:	S1.2
drawn by:	WMM
project coordinator:	WMM
project manager:	WMM
project no:	07010

date: March 14, 2009

ADD-#2

SKS-4

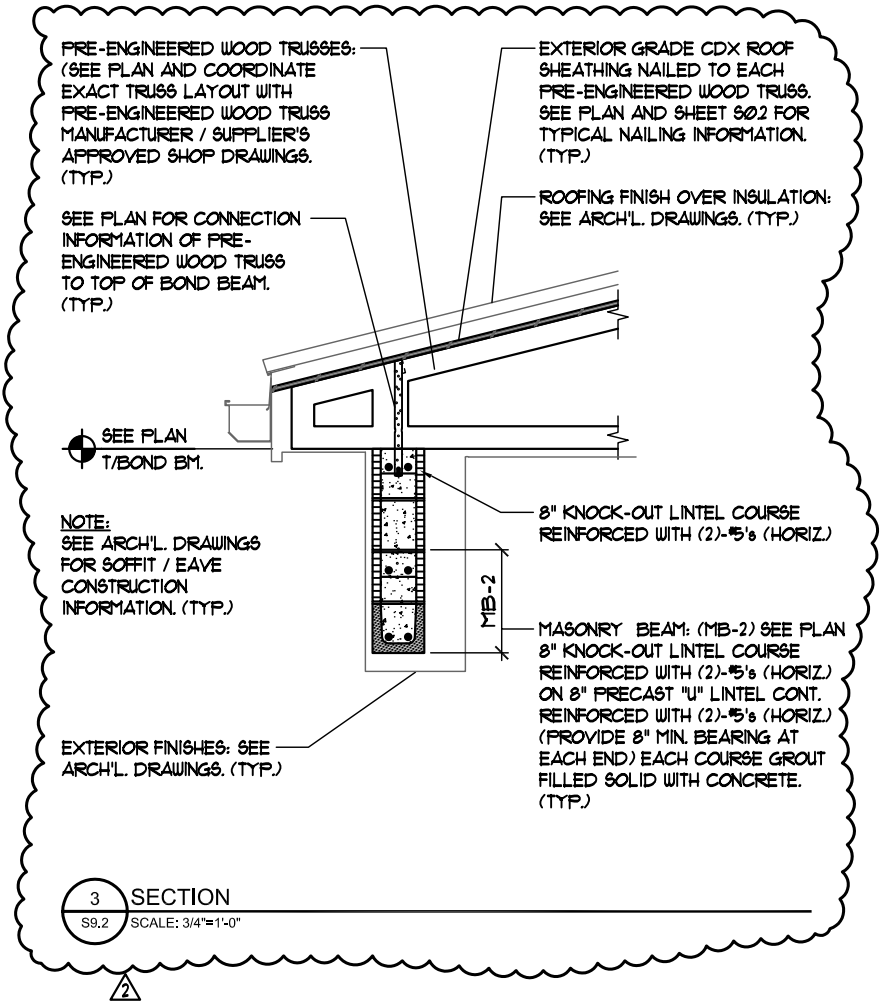

MITZO ENGINEERING, LLC
STRUCTURAL CONSULTANTS
670 NORTH ORLANDO AVE., SUITE 103A
MAITLAND, FLORIDA 32751
PHONE: (407) 644-1500
FAX: (407) 644-1562

Paisley Fire Station

Lake County, Florida

supplement to drawing:	S9.2
drawn by:	WMM
project coordinator:	WMM
project manager:	WMM
project no:	07010

date: March 14, 2009

ADD-#2

SKS-5

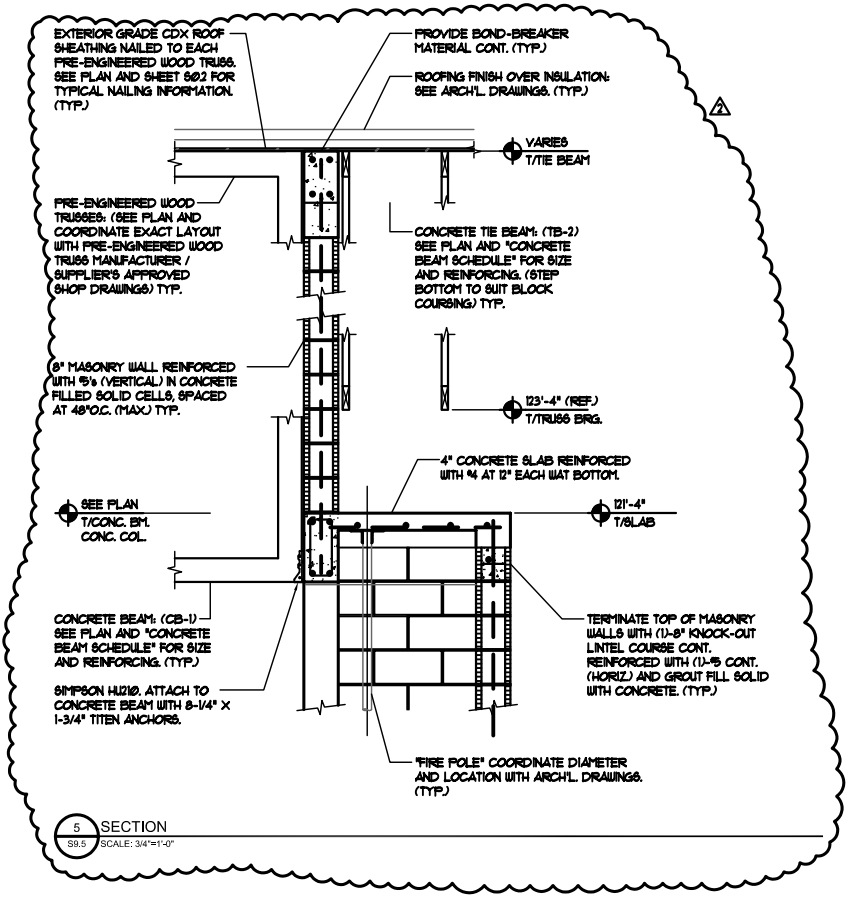

5 / S9.5 SECTION
SCALE: 3/4"=1'-0"

MITZO ENGINEERING, LLC
STRUCTURAL CONSULTANTS
670 NORTH ORLANDO AVE., SUITE 103A
MAITLAND, FLORIDA 32751
PHONE: (407) 644-1500
FAX: (407) 644-1562

Paisley Fire Station

Lake County, Florida

supplement to drawing:	S9.5
drawn by:	WMM
project coordinator:	WMM
project manager:	WMM
project no:	07010

date: March 14, 2009

ADD-#2

SKS-6