List of Specifications

Bid Submittal Form
Project Guidance Specifications
Shop-built Remedial System
Well Installation
Submersible Pumps and Control Modules

List of Construction Drawings

C-1 Phase II Remedial System Layout
C-2 Trench Sections
C-3 DPE/Groundwater Recovery Well Details
C-4 DPE and Groundwater Recovery Well Details
C-5 Surface Cover and Concrete Slab Details
C-6 Remedial Equipment Layout Details
P-1 Process and Instrumentation Diagram Legend
P-2 Process and Instrumentation Diagram
P-3 Process and Instrumentation Diagram

List of Schematics

Schematics – Astatula Main
Schematics – Astatula Well

BID PROPOSAL
PHASE II REMEDIAL SYSTEM CONSTRUCTION
ASTATULA, LAKE COUNTY, FLORIDA

Bid Item List

Item No.	Description	Bid
1	Mobilization/Demobilization	$ _____
2	Recovery Well/Vault Installation	$ _____
3	Recovery Well Pumps & Appurtenances	$ _____
4	Slab & Conduit/Conveyance Piping Construction	$ _____
5	Phase II Remedial System Conex Fabrication	$ _____
6	Utility/Permit Coordination	$ _____
7	Synchronization with Phase I System	$ _____
8	Startup Testing & System Adjustment	$ _____
9	Catalytic/thermal Oxidizer Rental (9 month)	$ _____
10	Catalytic/thermal Oxidizer Rental (6 month)	$ _____
11	_____	$ _____
12	_____	$ _____
	TOTAL BID	**$ _____**

All costs shall include shipping, permitting, site meetings, materials, equipment, tools, utilities, labor, supervision, management, and applicable sales tax. Total costs and unit costs provided above will be used to add and/or deduct for services that may or may not be required. In the note section below, the CONTRACTOR shall provide rental costs for a 6 and 9 month lease for the catalytic/thermal oxidizer and identify terms & conditions if the rental is extended beyond the initial lease, or if emission concentrations are sufficiently low to terminate the lease early. CONTRACTOR will provide a one-year warranty on all materials, equipment, and labor.

Note:_____

_____

_____

_____

_____

_____

PROJECT GUIDANCE

Part 1: General

The Astatula Refueling Facility previously dispensed gasoline and diesel fuel to County vehicles from a 15,000-gallon and 22,000-gallon underground storage tank (UST), respectively. Both tanks were replaced with aboveground gasoline and diesel storage tanks (ASTs) in 1987. In March 1991, petroleum hydrocarbons detected in the groundwater were reported to the FDEP and the site was accepted into the Petroleum Cleanup Participation Program (PCPP). Based on assessment results, the former UST area (source area) exhibits petroleum contamination as Light Nonaqueous Phase Liquid (LNAPL) and dissolved in the groundwater. The dissolved petroleum contaminate plume extents approximately 1,300 ft west from the source area. Due to the extent of contamination and estimated costs for remedial strategy implementation, a phased cleanup strategy was selected. Phase I was designed to capture the migrating dissolved plume using groundwater recovery wells, while Phase II addressed LNAPL and dissolved contamination at the source area using dual phase extraction (DPE) and groundwater recovery.

Constructed in June 2011, the Phase I continues to operate today performing groundwater recovery from five recovery well locations. Four of the recovery wells (RW-1d/RW-1dd, RW-2i/RW-2d, RW-3i/RW-3d, and RW-5i/RW-5d) feature nested groundwater recovery systems in a single well, while the other two wells (RW-1i and RW-4i) are single recovery wells. Recovered groundwater is pumped back to the Phase I remedial compound where it passes through bag filters for particulate removal, a low-profile air stripper for dissolved contaminant removal through volatization, and then through bag filters and granular activated carbon (GAC) for particulate removal and final polishing, respectively. The treated effluent is discharged to an infiltration gallery located approximately 440 ft west of the groundwater recovery wells.

The Phase II remedial system design incorporates eleven recovery wells to remove LNAPL, adsorbed and dissolved petroleum hydrocarbon contamination. Five recovery wells (RW-8S, RW-13S, RW-14S, RW-15S, and RW-16S) are DPE only, while four recovery wells (RW-9S, RW-10S, RW-11S, and RW-12S) are multi-purpose operation, initially using DPE mode while LNAPL is present and then transforming to groundwater recovery for dissolved contaminant recovery. Recovery wells RW-6S and RW-7S are groundwater recovery only. During the initial Phase II operation while in the DPE mode, the recovered stream is routed through an air/water separator to divide vapor stream from the aqueous flow. The vapor component is routed through a thermal oxidizer to remove volatile organic compounds, while the aqueous stream is pumped to an oil/water (O/W) separator. The O/W separator isolates LNAPL from groundwater, thereby allowing LNAPL to be skimmed off to a container for storage and subsequent disposal. Water from the O/W separator is pumped through bag filters and then to the airstripper constructed during Phase I of the project. Water is treated and disposed of as done for water recovered for Phase I.

1.1 Specification Overview

This specification details the site operating conditions and general procedures required during the execution of the project work. The Contractor shall supply all materials and labor for completing the project work depicted on construction drawings and specifications, which incorporates the main components as follows:

- Utility clearance in area of work
- Installation of two groundwater recovery wells and their associated vaults and appurtenances
- Installation of five dual phase extraction recovery wells and their associated vaults and appurtenances
- Installation of four dual phase/groundwater recovery wells and their associated vaults and appurtenances
- Trench conduit and conveyance piping to each recovery well and restore surface cover as specified
- Construct concrete slab for placement of Phase II remedial system conex
- Construct/assemble Phase II remedial system conex
- Connect electrical power to Phase II system
- Connect Phase I system to Phase II system as designed
- Operation and adjustment of completed remedial system

Contractor is responsible for obtaining all permits, notifications, inspections and coordinating with Authorities Having Jurisdiction (AHJ). Contractor shall coordinate site activities and request technical guidance with the Owners Engineer, who will coordinate with the Lake County Representatives. All matters of project payment, insurance and other administrative related issues shall be coordinated with Lake County.

The primary guidance documents associated with the project work include the following:

- **Construction Drawings, Phase II Remedial System, Lake County Astatula Refueling Facility**, February 25, 2015
- **Phase II Remedial System Specifications**
- **Phase I Control Panel Schematics**

Other project related information is provided in the following documents:

- **Remedial Action Plan, Lake County Astatula Refueling Facility**, November 25, 2009
- **Remedial Action Plan Modification, Astatula Refueling Facility**, November 3, 2014

1.2 Submittals

- Contractor shall submit work schedule that also includes traffic maintenance plan
- Contractor shall submit site-specific Health and Safety Plan (HASP)
- Contractor shall identify subcontractors and provide their appropriate licenses
- Contractor shall submit licenses required to perform the project work

- Contractor shall submit proof of OSHA 29 CFR 1910.120 HAZWOPER initial 40 hour training and subsequent 8 hour annual refresher certifications
- Contractor shall submit pertinent proof of notifications, permits
- Contractor shall submit As-Built Drawings and Startup Report for system

1.3 Warranty

No products are part of this specification so no warranty is required by this specification. However, in general, the Contractor shall be responsible for a one-year warranty of craftsmanship and material for work performed by the Contractor or work performed by any subcontractors hired by the Contractor.

Part 2: Products

No products are included in this specification.

Part 3: Execution

Contractor shall develop a site-specific Health and Safety Plan (HASP) prior to commencement of Work and submit to Owner's Engineer for approval.

Contractor shall obtain all required local, state, and federal permits or other requirements needed to complete work construction. The Contractor shall submit proof of applicable permit(s) for the Work described herein prior to commencement of work. All Work shall be performed in accordance with local, state, and federal codes, regulations and requirements.

Contractor shall submit a Work schedule to Owner's Engineer that, at a minimum, identifies labor, equipment, critical path items, and other important events.

Contractor shall submit list of subcontractors that will be used on this project and, if requested, provide documentation of licenses and insurance.

Contractor shall conduct daily meetings with Owner's Engineer to outline project safety, as well as discuss proposed activity schedule and goals for the day's Work. Standard working hours of 7 AM to 5 PM apply for performance of the Work. Contractor shall obtain approval for working non-standard hours from Owner's Engineer prior to working outside of normal business hours.

Utilities such as electric, water, and sanitary may not be available on site for Contractor's use; therefore, Contractor shall be capable of providing all utilities required to complete the Work.

All public notice notifications shall be coordinated by the Owner but the Contractor shall attend and provide information as needed.

Contractor shall develop a traffic control plan that allows entrance to the refueling station during all phases of the work. This may include routing incoming traffic with cones and barricades, placement of steel plates, or use of flagman. In the schedule provided by the Contractor, work areas in conflict with traffic flow shall be identified and a plan to maintain access to the refueling facility be identified.

Contractor shall perform remedial system startup and adjustment for a minimum period of three consecutive days provided an operational run time percentage of 85% is achieved. If at the end of the three-day system startup the minimum operational percentage is not achieved, the Contractor shall remain on site until the operational run time percentage criteria is met. During system startup, Contractor shall perform influent and effluent aqueous and vapor sampling and analysis in accordance with Florida Chapter 62-780.700, FAC, to provide analytical proof that the remedial system is operating as designed. A minimum of three sampling events for influent and effluent air each shall be performed during the startup and adjustment period, and one sampling event for the influent and effluent groundwater. All sampling shall be conducted in accordance with State of Florida Department of Environmental Protection (FDEP) Standard Operating Procedures for the intended methods. Air samples shall be collected and analyzed by EPA Method 18, with 24-hour turn-around time. The first air sample shall be collected on the first day of operation, and the remaining two samples shall be collected with no less than 36 hours between sampling events. Groundwater samples, both influent and effluent, shall be analyzed for EPA Methods 8310 for PAHs and 8260B for BTEX/MTBE. A 24-hour expedited turn-around time is required for water sample analysis. Analysis of all samples shall be completed by a lab with current (at the time of analysis) NELAC certification for the methods being run. If analytical results for the treated media fail to meet the cleanup criteria in Florida Chapters 62-777 and 62-780 FAC, the Contractor shall collect additional samples and retest at their expense until acceptable cleanup standards are met.

In addition to the remedial system monitoring, the contractor is responsible for collecting field data to document recovery rate, pressure, well drawdown and other pertinent data to evaluate the remedial system's operational performance. At a minimum ground water elevation at the recovery wells shall be collected daily during startup, as well as instantaneous and cumulative flow for each recovery well. Contractor shall provide all remedial system startup data, field notes, measurements and be responsive to requests for additional information from Owners Engineer. Contractor shall provide red-line markups of the construction drawings and attest to their accuracy in sufficient detail that Record Drawings may be generated.

Contractor has 120 days after Notice to Proceed to achieve substantial project completion.

Contractor can stage equipment and materials in the vicinity of the Phase I remedial compound as directed by the Owners Engineer.

Contractor shall coordinate with Owners Engineer to shut down the Phase I remedial system.

Pursuant to Chapter 62-780.700, within 120 days of completion of the remedial system the Contractor shall submit to Owner's Engineer for review and approval prior to submittal to FDEP, an electronic or paper copy engineering drawings (As-Built Drawings) for the installed remedial system. The engineering drawings shall include all construction and equipment design specifications of the active remediation system and any operational parameters different from those in the approved Remedial Action Plan. In addition, a summary of the remedial system startup activities shall be included with the engineering drawings.

SHOP-BUILT REMEDIAL SYSTEM

Part 1: General

The Contractor shall be responsible for complying with the equipment specifications provided herein in all aspects including but not limited to quality, delivery schedule, operational capabilities, durability, shipping, and placement. Therefore, the terms “Equipment Vender,” “Equipment Manufacturer,” or “Contractor” used in this specification are synonymous with the Contractor that the bid is awarded. The Owner’s Engineer shall provide approval of the Equipment Manufacturer whether Contractor self-performs or subcontracts the equipment manufacture. Contractor shall coordinate site activities with Owner and/or Owner’s Engineer. The Contractor shall select an equipment Vendor who can provide the remediation package as a complete system.

1.1 General Information

This specification package details the fully assembled, shop-built, new remedial system as depicted on the Phase II Remedial System Construction for Lake County Astatula Refueling Facility drawings. Note, all equipment specified herein is to be purchased except for the thermal oxidizer which shall be a rental unit. Equipment Manufacturers’ shall have a minimum of 10 years of documented, verifiable experience in the manufacture of remediation systems. The equipment vendor shall furnish a system enclosure containing described equipment that has been fabricated by a nationally recognized testing laboratory (NRTL) certified fabrication facility. The system shall be shipped fully certified as a whole including a control panel that has been built in a UL 508A and 698A compliant facility and shall display a certification decal inside the panel enclosure. The certification for the system must be specific to groundwater remediation systems. At a minimum, the system shall be UL73 and NFPA 70 certified prior to shipment to the site, as field certification evaluations are not acceptable. The Contractor shall provide a copy of their certification letter/report with their quotation.

The Contractor is responsible for equipment shipping, applicable taxes, security, storage, ground preparation, and slab construction where the equipment is placed. The Contractor shall be responsible for unloading and installing the prefabricated system on the concrete slab. The Owner will assist with coordinating electrical and cellular telemetry service to the remedial equipment. Contractor shall be responsible for locating utilities in the area of work and shall be responsible for repair of utilities if damaged by the work.

1.2 Submittals

Contractor shall submit sales drawings and/or catalog cut sheet required for the installation and operation of the equipment. Contractor shall provide a full engineering submittal package from the equipment vendor that details the vendors General Arrangement drawings and P&IDs. The package shall include all drawings and all major components in the system, as well as a **Sequence of Operations** for the entire system. Contractor shall provide interlock logic schematic as part of bid submittal. Once the bid is awarded to the Contractor, shop drawings of the remedial system enclosure, component layout, panel layout, piping and wiring routing shall be submitted for approval prior to

commencement of fabrication. These drawings shall be accurate in detail and shall contain all information necessary to relate the equipment to the specifications. Any deviations from the specifications must be approved by the Owner's Engineer prior to shipment to the site. Bid submittals that contain insufficient product information to evaluate the equipment's compliance to this specification shall be rejected as nonresponsive to the request for bid and re-submittal denied.

The Vendor shall supply three bound hard copies of the system O&M manual. It is expected that the system manual shall be grammatically correct and that the manual shall thoroughly explain the system operation in detail with troubleshooting guidelines. The manual shall include tables that document all major system, instrumentation, and control components in detail. Model numbers, serial numbers, quantities, and spare part model numbers shall be provided. All manufactured component sub manuals shall be included with the manual. The expectation of a concise and accurate manual will be reviewed and funds shall be withheld until the supplied manual is accurate and of high quality.

1.3 Warranty

All products shall be covered by a one-year warranty from manufacturers' defects. All services rendered shall be warranted for one year to be free of defects in craftsmanship. The Contractor shall be responsible for all warranties of craftsmanship, both for work that the Contractor performs and work performed by any subcontractors hired by the Contractor.

Part 2: Products

The product shall be a pre-fabricated and fully operational multi-phase extraction (MPE) remedial system enclosed in a conex box. The remedial system shall be delivered to the site. Following installation, proper operation shall be ensured. The system shall include the proper enclosure, equipment, piping, instrumentation and electrical, controls as specified in the construction drawings and outlined in this document.

2.1 System Enclosure

2.1.1 Enclosure Type

The system enclosure shall consist of a single use or new standard size sea box (conex). The outside of the conex shall be free from rust, dents and have a like new coat of paint on the exterior. The conex shall be a hi-cube conex with dimensions 8 ft W x 40 ft L x 9 ft H. The floor and walls of the conex shall provide adequate insulation for operation of the equipment during winter months and for suppression of the equipment operating noise. The exterior of the conex shall be fully painted with a uniform neutral gray or beige color as designated by the Owners Engineer. All modifications shall be epoxy primed and finished with a durable semi-gloss finish of uniform consistency. The conex shall be studded with metal studs and shall have a ½-inch sheetrock finish throughout. The interior stud spaces shall be fully insulated throughout. The Equipment Manufacturer shall provide a minimum of 20 digital images depicting the installation of the studs, insulation, and sheetrock. The sheetrock shall be finished, sanded smooth, and painted with two coats of a high quality latex paint. The interior walls shall be fully insulated and covered with a white water-resistant hardboard and there shall be a fully gastight seal

between the process and the control room. The interior of the process room shall have an acoustical insulation and performance level for noise of 70 dB at 10 ft from the conex while all equipment is operating. Documentation of the testing must be provided in writing at the time of system delivery. Finished wood products are not allowed nor are walls allowed to be fabricated from wood studs. Vendor shall provide high definition images of the enclosure and system assembly. This shall include all interior wall assembly, insulation, and equipment installation into the system. Any concealed components or devices shall be documented to exact locations. All images shall be provided on portable data storage device.

2.1.2 Enclosure Separate Room Requirements

The conex shall be separated into two compartments: the first compartment shall be the process room where all equipment and apparatuses will conform to the national electric code (NEC) Class 1 Division 2 requirements for hazardous locations; the second room will be the control room and shall contain the system control panel. The control room shall be unclassified. The equipment vendor shall install electrical conduits in accordance with applicable codes. All controls shall be accessible from the access locations.

2.1.3 Enclosure Accessibility and Climate Control

The conex shall include double rear doors and at least one 3-ft wide side door. A partition wall shall separate the process room and the control room. The control room shall be located, at a minimum, within the forward 5 ft of the conex and will contain the electric control panels and the equipment that does not process potentially explosive vapors. Penetrations between the control room and the process room shall be sealed to prevent potentially hazardous vapors from entering the control room.

The control room of the conex shall be a conditioned space and shall be heated and cooled with an energy efficient 18,000-BTU mini-split system. The mini-split shall be designed to operate for dehumidification purposes as well as temperature control. Wall-mounted AC units are not acceptable. The cooling/heating fan shall be installed in the control room and the compressor shall be mounted outdoors. The mini-split shall be charged and made operable by the Vendor.

The control room shall have interior lighting using strip LED lighting to provide sufficient light for a conventional working environment. The light shall be installed on a light switch. The process room shall have a minimum of four Hazardous Location lighting fixtures, each at least 48-inch fluorescent bulb style.

The conex process room shall be vented with an explosion-proof forced air system sufficient to keep equipment cooled to within manufacturer recommendations. A minimum 24-inch fan is recommended with proper OSHA safety guards. The fan shall be thermostatically controlled and the temperature monitoring shall be linked into the PLC for remote monitoring.

2.1.4 Enclosure Secondary Containment Requirements

The floor of the conex shall serve as secondary containment for the remediation system. A leak-proof epoxy liner shall be applied to the floor and walls of the conex to create a minimum of 2 inches of

containment. A floor sump shall be installed to house a conductivity sensor which will alarm and will cause the system to shut down when a leak is detected.

2.1.5 Enclosure Electrical Requirements

The conex shall be wired to equal or exceed requirements set by the current edition of the national electric code (NEC). All copper conductors for motor feeds shall be oversized by one wire gauge. Conduit within the process room shall be rigid with explosion proof junction boxes and seal offs. Low voltage instrumentation wiring shall be contained inside of conduit where it can be re-installed back to the control panel if required. Low voltage instrumentation wiring shall not share conduit space with high voltage power supply wire unless approved by the Owners Engineer.

Since this site has historically experienced lightning-related problems, extra measures shall be employed to mitigate lightning-related damage. The equipment vendor shall provide supplemental grounding for the conex which will include, but is not limited to, 3/0 THHN copper conductors that encompass the perimeter and both sides of the conex. The conductor length shall be 100 linear ft at a minimum. The conductor shall be bonded to the conex at a minimum of 5-ft intervals. The conex doors shall also be bonded.

The equipment vendor shall supply four ¾-inch x 10-ft copper ground rods that will be installed by the onsite Contractors. The equipment vendor shall provide a 10-ft piece of 1/0 copper conductor that is attached with a CADWELD to the 3/0 copper conductors at each exterior corner of the conex. The ground cable shall be field welded by the site Contractor to the ground rods that are supplied loose.

All motors installed in the hazardous location shall be provided with a factory nameplate of Class 1, Division 2 Hazardous Location. Motors shall be UL listed.

2.2 Remedial System Equipment

2.2.1 Vacuum Pumps (2)

Two Sutorbilt® Legend® DSL, model 6V series or approved equal, rotary lobe vacuum pumps shall be supplied by the equipment vendor. Each vacuum pump shall be capable of producing 225 standard cubic feet per minute (scfm) of air at approximately 15 inches of mercury vacuum. Each blower will be equipped with an outlet discharge silencer properly sized for the blower's performance. Each vacuum pump is to be supplied with an auto-oiler system that will inject up to 2 ounces of Fluid Film protectant into each blower once per week. Each auto oiler system shall be provided with needle valves and solenoid valves for automatic operation. Additional minimum specifications are as follows:

1. PD blowers shall be direct drive as these systems are more energy efficient; hence, belt driven systems are not acceptable. Each blower shall be supplied full with synthetic oil. The blower frame shall be a heavy duty carbon steel design painted or other type of protective coating and warranted for stresses generated during operation.
2. All blower discharge process piping shall be carbon or stainless steel (ss). Aluminum piping shall not be used.

3. Thermoplastic OSHA approved coupling guards shall be fitted to each machine as applicable to prevent finger access to the couplings and/or any other moving pinch parts.
4. PD blowers shall each be operated by variable frequency drives (VFD). The VFDs shall be controlled by the system control panel and shall operate the PD blowers individually or combined. VFDs are required to be installed inside a control panel within a climate controlled environment. Air conditioning shall be sized to remove 150% of the BTU loading of the VFDs or have a minimum temperature rating of 50 degree C and fan ventilated.
5. An automatic vacuum relief (VRL) valve shall be installed on the influent side of the system which shall open at 17 inches mercury (in. Hg) vacuum. The VRL shall be designed to prevent the blowers from experiencing deadheading conditions. The VRL shall include a suction side filter/silencer.
6. A 4-inch diameter temperature gauge shall be installed on the discharge of each vacuum blower.
7. Each blower shall have 4-inch isolation valves on the inlet and discharge of each blower for complete isolation as required.
8. Two flowmeters shall be installed on the suction side of each SVE blower. The flowmeters shall be scaled for an individual range of approximately 60-600 scfm and shall be provided with the appropriate conversion charts for flow based on correction factors of vacuum. Differential gauges with orifice plates are not allowed. The flowmeters shall be Mercoid 3100 series Explosion-proof differential transmitters with Dwyer DS-300 pitot tubes. The units shall provide a scaled 4-20mA output to the PLC system for monitoring and data logging. All instrumentation tubing shall be SS tubing. **Flexible thermoplastic tubing shall not be allowed.**
9. The inlet header feeding into the remediation system shall be a 6-inch HDPE or stainless steel inlet header and shall include individually controlled/modulated legs that are designed to control vacuum to each leg. By design, the system will have the need to control vacuum levels at each point to create the desired effect in that individual recovery well. The header shall be a fabricated assembly designed to operate at full vacuum. The header shall be fabricated from round piping.
    - Each leg of the header shall be 2-inch piping and each pipe shall extend neatly through the side wall of the container.
    - Each leg shall be terminated with a standard 150# rated flange.
    - Penetrations through the container shall be neatly caulked with a UV rated elastomer. No silicon or latex caulk.
    - Each leg shall include a 2-inch modulating ball valve that is controlled by a pneumatic ball valve. The valve assemblies shall be stainless steel body with SS ball and PTFE seals. The pneumatic valve shall be controlled by a 24VDC solenoid valve wired to the PLC system. The PLC system shall allow the user to not only control vacuum set points

but shall also allow for zone control by having a 24-hour repeatable timer for each leg. Timer shall allow for up to four intervals of on/off per day.

- A vacuum transmitter shall be installed on the downstream side of the leg prior to leaving the enclosure. The transmitter shall be intrinsically safe and shall provide a 4-20mA signal to the PLC that will allow the user to select an applied operating vacuum set point, which in turn will modulate the valve to control the desired applied vacuum.
- Each leg shall have a 12-inch long clear Schedule 80 PVC pipe stub that is mounted with Proflex connectors for ease of cleaning.
- Each leg shall have a 0-30 in. Hg back mount liquid filled stainless steel vacuum gauge.
- Each leg shall have a labcock sample valve with viton seals and hose barb connection.
- A single vacuum gauge shall be installed on the header.
- A 5-HP reciprocating air compressor shall be installed in the control room whose sole purpose is to supply compressed air for modulation to each of the individual actuated valves. 300 psig instrumentation tubing shall be supplied to the actuators. A single inline ½-inch general purpose solenoid valve shall be installed to isolate the entire air supply to the valves. The compressor shall be outfitted with regulator and two-stage filtration. The compressor tank shall be outfitted with a timer based auto drain valve assembly as well as the filter modules.

2.2.2 Particulate Air Filter

A particulate air filter shall be installed on the intake line of the vacuum blowers prior to the inlet of the moisture separator. The filter housing shall be 304SS and shall include a differential magnehelic gauge installed across the inlet and outlet of the housing to identify filter pressure drop. The magnehelic gauge shall be connected with SS tubing using Swagelok style fittings. No plastic tubing allowed.

2.2.3 Dilution Valve

A dilution valve assembly utilizing a gate valve with a filter/silencer shall be included as part of the system. This valve assembly shall include an inline air flow meter to monitor dilution air flow into the moisture separator. The flowmeter shall be a 2-inch Rotameter scaled to 100 scfm at atmospheric conditions.

2.2.4 Moisture Separator

A moisture separator (MS) with a minimum capacity of approximately 300 gallons shall be installed to remove moisture and free liquids from the air stream prior to entering the vacuum pumps. The MS shall be capable of withstanding a pressure of 28 inches of mercury vacuum and shall be ASME style design with domed lid. The MS shall be constructed of 304 or better stainless steel. **Aluminum or Carbon Steel MS tanks are not allowed**. The MS shall contain one tangential inlet opening, one demister element, one air discharge opening, a 1-inch diameter bottom drain with ball valve, one 6-inch manway port located at the bottom of the tank for cleanout and one liquid discharge opening. The moisture separator shall also be constructed with a demister element that must be easily accessible. The

moisture separator shall be equipped with a sight glass and electronic float stem assembly for level control. Level controls shall include low level (pump off), high level (pump on) and a high-high level (system shutdown) using 316 SS floats and shaft. The high-high level shall be connected to the Phase II control panel interlock circuit to shut down the recovery operation. The level switch shall be mounted on an easy to remove camlock assembly for ease of cleaning. The maximum groundwater influent rate is anticipated not to exceed thirty gallons per minute (gpm). A 4-inch-diameter SS Temperature Gauge shall be installed in the sidewall of the MS tank to identify incoming vapor temperatures

2.2.5 Progressive Cavity Pump

A progressive cavity pump shall be installed to transfer recovered fluids from the MS to the oil/water (O/W) separator. The progressive cavity pump shall be capable of pumping 0 - 30 gallons per minute (gpm) and withdrawing fluids from the moisture separator under of 28 inches of mercury vacuum. A Moyno 500 series pump, model 36701 with a Viton stator or approved equal is recommended. Contractor shall provide documentation the stator is Viton. The pump shall include a bypass discharge line that returns to the Moisture separator tank. An isolation valve shall be installed on both the inlet and outlet side of the pump. A 100 psig stainless steel, liquid filled pressure gauge and sample port shall be installed on the discharge of the pump.

2.2.6 Equalization Tank and Oil/Water Separator

A 500-gallon single wall, steel equalization storage tank 4-ft diameter by 5 ft 5 inches high shall be installed inside the conex to maximize pre-separation. All connection points below the water level shall be factory installed spin weld fittings to prevent potential for leaks. The tank shall have an overflow pipe that forces all liquids to flow on top of the water level in the tank into the O/W Separator. The tank shall be fabricated from mild carbon steel with a flat bottom head and top. Bottom head, shell and top steel gauge thicknesses per UL-142. All items included in tank unit shall be coated with red primer. The tank unit shall be manufactured in conformance with Underwriters Laboratories' UL-142 specifications and so labeled. The tank will have an integral high level interlock float. Vendor shall provide all hose and wiring from the system to the tank. Site contractor shall perform the installation.

An O/W separator shall be installed to remove light non-aqueous phase liquid hydrocarbons (LNAPL) from the groundwater prior to further treatment. The O/W unit shall be rectangular in shape and constructed of either fiberglass or stainless steel or other suitable corrosion resistant material. O/W unit shall be configured of three or more sections that include; an initial settling chamber suitably sized, coalescing media and LNAPL recovery section, and post treatment chamber. The height of the O/W unit shall not be over 5 ft from the floor unless a built-in scaffold is included. Scaffold shall be of sufficient height, length and width to allow operation & maintenance (O&M) to be performed on the unit. The O/W shall have a vapor tight lid that easily locks in place and allows cover to be lifted/removed for interior access. The O/W separator shall be sized for a flow of at least 40 gpm and shall utilize a matrix of vertically positioned oleophilic polypropylene coalescing media to aid in separation of LNAPL. The O/W separator shall be equipped with an electronic level controls including low level (pump off), high level (pump on) and a high limit (system shutdown). An adjustable skimming tube shall collect the

separated LNAPL and gravity drain the liquid flow to a vented 200 gallon product storage container that has a high limit switch connected to the control panel interlock (system shutdown).

2.2.7 Product Storage Tank

Skimmed product shall be containerized in a double wall product storage tank rated as UL 142 approved. The product storage tank and shall include two 48-inch vent pipes that are turned downward using tee fittings. The product tank shall have a high level alarm that is connected into the PLC logic controls so that the remedial system components providing LNAPL shall be switched off.

2.2.8 Particulate Bag Filter Housing

The Equipment Manufacturer shall supply two particulate bag filter housings to remove suspended solid particles from the incoming groundwater. Bag filter housings must be a minimum or 304SS. The first bag filter housings shall be installed at the discharge of the oil/water separator transfer pump prior to discharge to the existing air stripper. Filter Specialists Inc. Model BFN 12, or equivalent, is required. Additional minimum specifications are as follows:

1. Each filter housing shall have its own air vent.
2. Drain valves shall be plumbed to the exterior of the conex system and terminated with a 1” camlock cap.
3. Inlet and outlet connections shall include 2 inch diameter schedule 80 PVC true union ball valves with Viton seals.
4. Bag Filters shall be plumbed in parallel so filter can be replaced while the system is in operation.

2.2.9 Centrifugal Transfer Pump

A centrifugal transfer pump shall be provided to remove liquid from the oil/water separator transfer sump. The transfer pump shall be a Myers CT20 2HP pump or approved equal that is capable of providing the same operating characteristics. The pump shall have a mechanical shaft seal made of Viton and the impeller shall be brass. Contractor shall provide two spare Viton Shaft seals with the system.

2.2.10 Totalizing Flow Meter

An electronic totalizing flow meter shall be installed inline after the O/W separator transfer pump. The flow meter shall be a Signet inline Mag meter, or approved equal, stainless steel internal parts and an electronic transmitter. The flow transmitter shall be intrinsically safe. A remote display for the totalizer shall be included in the control panel.

2.2.11 Vapor Phase Catalytic Oxidizer

It is anticipated that vapor treatment will not be required beyond six months of startup of the Phase II remedial system; therefore, the Equipment Vendor shall provide a skid mounted thermal/catalytic oxidizer rental unit capable of removing volatile organic compounds (VOCs) from the effluent air stream. The oxidizer shall use propane gas to supplement the thermal process stream. The oxidizer will include a vapor control valve (VCV) for controlling the concentration of VOCs within the influent

stream in order to control the temperature of oxidizer. The oxidizer shall have a maximum design vapor flow rate of 1,000 scfm with a destruction efficiency of 99.9%. The oxidizer shall be integrally controlled by the system control panel. The Equipment Vendor is to provide pricing for a minimum 6-month lease in their bid

Additional minimum specifications:

1. The oxidizer shall have UL listed NEMA 4 control panel with Hi Visibility Temperature controllers.
2. The oxidizer shall operate using gas.
3. Equipment vendor must have a minimum of 10 years' experience in the manufacture of thermal oxidizers.
4. The oxidizer gas train must be national fire protection association (NFPA) compliant with double blocking gas valves.
5. The oxidizer shall include an inline process blower capable of providing -10 inches water column (in. W.C.) draft induction and +10 in. W.C. positive pressure.
6. The oxidizer shall have two control valves. One control valve shall be a minimum of 4 inches diameter gas blocking valve and one control valve shall be a minimum of 4-inch diameter modulating valve. The modulating valve shall actuate for bleed air.
7. Onsite Contractor shall be responsible for all piping from the exterior of the Phase II system to the oxidizer including electrical and vapor piping. The Vendor shall specify the required wiring and communications cabling and shall terminate the communications cabling.
8. The Vendor shall provide a branch circuit for the oxidizer.

2.2.12 System Spare/Accessory Parts

Vendor shall include the following items with the remedial system, in the quantities indicated.

1. Two gallons of full synthetic rotary lobe blower oil
2. Two tubes of high temperature synthetic bearing grease for the blowers with grease gun.
3. One 5-gallon container of Fluid Film protectant
4. Two spare Solberg filter elements for the filter between the MS tank and the vacuum blowers
5. Two spare Solberg filter elements for the dilution air valve on the MS tank.
6. One spare Float Stem for the Moisture Separator Float Level switch
7. One spare Float Stem for the OWS Transfer Sump Float Level switch
8. Two spare Intrinsically Safe Barrier Relay modules
9. Five complete replacement fuses for all single trip fuses in the system

11. Five spare 0-30”HG SS liquid Filled gauges
12. One spare CU300 recovery pump controller/programmer with a single IR programmer module

2.3 Remedial System Piping

The remedial system piping shall be supplied and installed as shown on the process and instrumentation diagram (P&ID) provided in these specifications. All piping will be labeled with directional arrows. All water carrying and vacuum side process piping shall be schedule 80 PVC and all piping seals shall be Viton or PTFE. All liquids carrying pipe up to the Oil Water Separator shall be HDPE or SS. All vapor handling equipment on the discharge of the vacuum system shall be schedule 40 galvanized steel piping.

1. The influent piping connections from the extraction wells, for influent vapor and groundwater, shall be made through the sidewall of the conex.
2. The remediation system shall have two influent manifolds to collect influent from up to nine DPE recovery wells and up to six groundwater recovery depending on the operational configuration at that time. The DPE manifold shall be constructed from 4-inch diameter HDPE, SDR 11, PE 4710 or SS pipe or other approval equal as depicted on the project construction drawings. The groundwater recovery manifold shall be constructed from 6-inch diameter HDPE, SDR 11, PE 4710 or SS pipe or other approval equal as depicted on the project construction drawings. Contractor shall provide a sketch describing the manifold design, material and operating pressure for approval.
3. The inlet pipe from each extraction well shall include a back-mounted vacuum gauge manufactured of stainless steel and brass with a scale from 0 to 30 inches mercury and a gate valve.
4. The remediation system shall have one liquid drain valve for the moisture separator and shall be plumbed to the exterior of the conex.
5. The remediation system shall have one process pipe from the moisture separator to the vacuum extraction blowers.
6. The remediation system shall have one dilution air valve to reduce the vacuum on the extraction wells, air flow meter, and filter.
7. The remediation system shall have one air discharge line with a sample port from the vacuum extraction blower. The air discharge from the extraction blowers shall exit through the sidewall of the conex and have a discharge flange and support system such that a ten-foot high discharge stack and silencer can be added. The discharge stack shall contain a “T” fitting and a gate valve for proper connection to the oxidizer for air treatment, as required. The extraction blowers shall have suitable excess static pressure to allow for operation with the additional stack length or air treatment via catalytic oxidizer.
8. The remediation system shall have one process pipe from the moisture separator to the first transfer pump.

9. The remediation system shall have one process pipe with a ball valve, sample port, and check valve from the first transfer pump to the equalization tank.
10. The remediation system shall have a process pipe from the equalization tank to the oil/water separator that will gravity drain.
11. The remediation system shall have one flexible recirculation line with a gate valve from the first transfer pump to the moisture separator.
12. The remediation system shall have one process pipe from the oil/water separator sump to the second transfer pump to deliver water through the particulate filter and to an existing air stripper. A check valve, gate valve and sample port shall be installed following the pump.
13. The remediation system shall have one process pipe from the oil/water separator to the LNAPL storage tank.

2.4 Remedial System Instrumentation

The remediation system measurement instrumentation shall include the following equipment and be based on the P&ID provided in these specifications:

1. Vacuum gauges: there shall be a total of nine liquid filled vacuum gauges located at the extraction well manifold, one at the moisture separator, one prior to the inline air filter, and one after the inline air filter. Vacuum gauges shall be liquid-filled and rated for 0 to 30 inches of mercury vacuum. Each gauge shall be permanently mounted to display the gauge face from the typical vantage point.
2. Six liquid-filled pressure gauges: one located after each of the two transfer pumps and two for each of the particulate filters. Each gauge shall be permanently mounted to display the gauge face from the typical vantage point.
3. One vacuum transducer (Rosemount 3051C or equal) for the vacuum pumps.
4. Four electronic pressure transducers - one located after each of the two transfer pumps.
5. One temperature gauge for the vacuum pump air discharge.
6. Differential pressure gauges or air flow meters: one for the vacuum pump discharge and one for the dilution valve airflow.
7. Two electronic flow rate meters (Intrinsically safe Signett Mag meters with local display at PLC and 4-20mA output to PLC for totalization in PLC) with local display after transfer pump #1 and transfer pump #2.
8. Hour meters for the vacuum pump, stripper blower and three transfer pumps.
9. A SS float switch assembly for the moisture separator that includes low level (pump off), high level (pump on), high-high level (system shutdown) controls.
10. A float switch assembly for the oil/water separator sump that includes low level (pump off), high level (pump on) and a high limit (system shutdown) controls.

11. A SS float switch assembly for the LPH storage tank that includes one high limit switch.
12. A SS float switch assembly for the equalization tank that includes one high limit switch.
13. A SS float switch assembly or conductivity switches for the floor.
14. A differential pressure transmitter to cease system operation due to excessive bag filter pressure. (10psig)
15. A lower explosive limit (LEL) switch within the process room to cease the operation of the system due to the presence of explosive vapors. The unit shall be locally programmed with an alarm output only. The LEL meter shall be provided with a field calibration kit including gases.
16. A solenoid vacuum relief valve (interlocked with the moisture separator high-high level and low level switches) to be mounted on the moisture separator or in line prior to the vacuum pump.
17. Each influent recovery well leg shall include and ISTEC flow totalizer with Intrinsically Safe pulse output to the PLC for counting total flow from each recovery well. The ISTEC shall have Viton Seals. A 20gpm Rotameter shall be installed inline for visual indication to the operator of instantaneous flow from the recovery well.

    The vacuum pump(s), moisture separator, equalization tank, transfer pumps, and the oil/water separator shall be interlocked for optimal performance. The system shall be controlled by using a programmable logic controller (PLC) with software to view and access the remediation system equipment operation remotely. A Siemens PLC unit is recommended. The telemetry unit shall provide data including water flow rate and totalizer data as well as vacuum and pressure data and oxidizer operational status.

    All transmitters shall transmit a 4-20mA signal to the PLC for monitoring and control purposes

2.5 Remedial System Electrical

The electrical control panel controlling the remedial system shall be UL approved. The electrical distribution, instrumentation, and control components shall be mounted in a NEMA 4 enclosure inside the front control room. This enclosure shall be both weather and tamper proof but not explosion proof. The remedial system electrical requirements are as follows:

1. A Single Electrical load center shall be required which provides all branch circuit protection to the system. The load center shall be a 200 amp main breaker 480V 4 wire NEMA 1 load center installed in the electrical control room. The load center shall house all additional circuit breakers for all other devices. All motors must have their own distinct circuit breaker with lock/out tag out provisions for each motor, no exceptions allowed to this requirement. Motor protector switches shall not be allowed in lieu of a circuit breaker. The load center shall include a minimum of 25% spare spaces. Load center shall be labeled properly. If a panel board is not available with the adequate positions, then the vendor shall provide and prewire a subpanel for the additional spaces.
2. All equipment inside the process room will conform to National Electric Code Class 1, Division 2 requirements for use in Group D atmospheres and the control panel will conform to UL 698A,

industrial control panels relating to hazardous (Classified) locations. The equipment vendor shall install electrical conduits in accordance with applicable codes.

3. A fused main disconnect shall be provided outside the conex along the 8-ft wall against the control room. The disconnect shall be a Heavy Duty ABB brand disconnect and rated for 200Amp, 600VAC, 3 phase and shall include a neutral-bar whether it is required for use or not. The power disconnect shall include 200-Amp 3-phase time delay fuses and wiring from the disconnect load side shall be installed to the main breaker panel inside the control room. An oversized (#1 gauge copper minimum) and isolated grounding conductor shall be installed from the power disconnect to the main system control panel. The vendor shall ensure that a #1 copper grounding conductor enters the disconnect switch and is bonded to the system grounding ring which is integral to the system.
4. The control panel shall contain all necessary fuses, starters, contactors, normally open and normally closed auxiliary contacts for each motor, and wiring locations (terminal strip). All motor starters, liquid level controls and alarms shall be interconnected into a Siemens PLC unit with battery backup and wireless terminal install.
5. The control panel shall include a locally mounted remote display for the flow totalizer. The instrument shall transmit instantaneous and total flow to the system PLC.
6. The equipment vendor shall provide explosion proof lighting inside the process room to allow for adequate visibility while servicing the system. A minimum of 5 explosion-proof light fixtures shall be installed. No incandescent bulbs allowed.
7. The equipment vendor shall provide two standard lighting fixtures inside the system control room to provide proper lighting. No incandescent bulbs allowed.
8. Four GFCI protected convenience receptacles shall be installed in the control room.
9. The load center, control center and all devices shall be dielectric tested once fabrication is completed. A testing report must be provided.

2.5 Remedial System Controls

1. System vendor shall have a minimum of 10 years' experience in designing control panels for remediation systems and shall have integrated systems with a minimum of 50 Siemens PLC/SCADA based systems.
2. Control panel shall be a UL listed Control panel. Listing shall be for UL508A and UL698A.
3. The panel shall have a minimum rating of NEMA 4/12 and shall have the HMI mounted on the front door panel.
4. The control panel shall be controlled by a Siemens Programmable PLC which is programmed in the latest version of Portal TIA (v13). Step 7 not allowed. PLC shall be a Simens PLC such as 200 or 300 series up to 1200. A Color 10" HMI Comfort series touchscreen shall be supplied with the system and shall include all local operator interfaces.

5. The PLC system shall be supplied with **redundant** 24VDC power supply that is designed to have a minimum of 4 times safety factor for amp capacity (i.e., if the maximum load on the 24VDC system is 5amps, then the system shall provide up to 20 Amps of capacity minimum).
6. Vendor must provide three 16 GB memory storage USB cards with the system.
7. System must include a 3-phase power protection monitor that is adjustable. The control system must be interlocked with the alarm.
8. System shall have an integrated 3-phase surge suppression system that is interfaced into the main distribution system. The package must be a factory assembly housed in a separate NEMA 4 enclosure. The system must actively monitor and display the protection of all 3 phases and indicate if an MOV is defective or blown out. The system shall have replaceable MOVs, and shall have a minimum surge rating 185,000 Kaic.
9. All wiring inside the control panel for loads shall be oversized by one gauge size.
10. The Equipment Manufacturer shall supply a supplemental remote IO module or modules as required that shall allow the vendor to incorporate all control of the existing system into the current control panel in the groundwater treatment building. The vendor shall supply a remote slave HMI that mimics the HMI in the DPE system. The Equipment Manufacturer shall be responsible for providing certified technicians onsite to provide the up-fit and interfacing of the existing panel. The vendor shall provide 250 ft of Profibus or ethernet cable to interconnect the two systems. The interconnect shall be installed by the site Contractor but terminated by the Vendor. The Vendor shall terminate the two ends prior to startup. The Contractor is responsible for full integration of these two panels. Interlocks shall be designed to provide safeguards against impact to the environment and personnel safety; however, one detected fault does not require complete system shutdown.
11. The Equipment Manufacturer shall provide a wireless communication package for the control panels. The package shall include a business class network router, a 4G High speed compatible modem, an outdoor High Gain mast mounted Antenna package (with mast) and 25 ft of cabling. The Vendor shall be responsible for all fittings to install the system. The Vendor shall handle all networking and service requirements for the telemetry and shall provide the system with an initial 2 years of service where the end user is not responsible for any invoicing in the first 2 years of use. The Vendor shall provide an estimate for continued service after year two.
12. The Redi-Flo 3 Groundwater pump controls shall all be incorporated into the Phase II main control panel.
    - Each groundwater pump shall have the ability to be controlled through the HMI
    - Each pump shall have its own branch circuit from the load center
    - Each pump shall have its own contactor for control. The coil voltage shall be 24VDC

- The integrator shall provide a CU300 and a “programming” contactor for each pump that is fed through the CU300. The HMI shall be programmed to allow the user to select a programming mode for each pump. This will engage the programming contactor to the CU300. Only 1 pump shall be able to be programmed at a time
- Each groundwater pump shall be interlocked to electrically disconnect when a fault is registered in the airstripper
- A spare CU300 controller shall be provided with the system in the factory new box.

Part 3: Execution

Remedial System Startup and Delivery

1. The conex system will be operated and tested in the equipment vendors shop for a minimum of six hours before delivery to the site. Each interlock condition shall be tested for proper operation.
2. The equipment vendor shall deliver the remediation system to the project site after coordination with the Owners Engineer.
3. Contractor shall place conex centered on concrete pad and shall secure the unit to ground in accordance with the Florida Building Code for wind loading
4. The remediation system shall be readily operable upon delivery after site connections for electrical power, inlets, and discharges are connected.
5. Three copies of an operation and maintenance manual shall accompany the equipment and include “as built” construction drawings, bill of materials and replacement parts information, color photographs of system components, specification sheets for all parts, manufacturer maintenance instructions, identification of all input and alarm set points, PLC site file documentation and detailed electrical schematics for the system.
6. The equipment vendor shall provide three days of on-site service for system startup to ensure all components operate properly and are properly calibrated. During system startup each interlock shall be tested for proper operation and communication to the respective component. Pricing for these services shall be included in the bid.

WELL INSTALLATION

Part 1: General

1.1 General Information

This specification details the materials and installation of eleven recovery wells. The Contractor or their subcontractor shall be knowledgeable in environmental well drilling and be a licensed well driller capable of obtaining well installation permits. Contractor shall supply all materials and labor for the installation of the eleven recovery wells, vault boxes, and associated equipment, and shall construct them in accordance with the project construction drawings and as directed by the Owner's Engineer. Six recovery wells perform groundwater extraction using submersible pumps (RW-6S, RW-7S, RW-9S, RW-10S, RW-11S, and RW-12S), while five wells are dual phase extraction (DPE) only. The wells using submersible pumps are 5-inch diameter, while the DPE wells are 4-inch diameter wells.

1.2 Submittals

Prior to commencement of drilling, the Contractor shall submit drawings and/or catalog cut sheet depicting the materials and proposed installation method for approval. These drawings shall be accurate in every detail and shall contain all information necessary to relate the equipment to the specifications. Submittal of any and all permits required for this scope shall be the Contractor's responsibility, and shall be obtained prior to commencing work. The Contractor shall submit proof of permit approval as applicable to the work described herein.

Well completion logs and well drilling permits are required along with field notes describing the activities, quantities, materials, and time schedule.

Any substitutions to the materials and or methods shall be submitted in triplicate to the Owner's Engineer for approval. The Owner's Engineer will review the alternative and render a decision to accept as approved equal or reject the submittal.

1.3 Warranty

All products shall be covered by a one year warranty from manufacturers' defects. All services rendered shall be warranted for one year to be free of defects in craftsmanship. The Contractor shall be responsible for all warranties of craftsmanship, both for work that the Contractor performs and work performed by any subcontractors hired by the Contractor.

Part 2: Products

2.1 Recovery Well

Well casings shall be of Schedule 40 PVC construction, and all well screens shall be factory machine slotted to 0.01-inch slot size. Recovery wells shall be constructed with a 20/30 sand filter pack and use a 30/65 fine sand seal that is topped with Type-I Portland Neat Cement that extends to the bottom of the well vault.

2.2 Recovery Well Vault

Each recovery well shall be finished by the Contractor with a vault box and concrete pad that the Contractor shall supply. The vault boxes shall be H-20 traffic-rated, measure 2 ft by 2 ft, and measure 2 ft to the bottom of the side walls. Steel shall be coated with a black epoxy paint to prevent rust and corrosion. All incoming piping shall be installed beneath the walls of the vault box, so that no holes are created in the walls of the vault boxes. The vault box pads shall be finished with concrete with a standard rating of a minimum of 4 ksi, and shall extend laterally approximately 6 inches beyond the edge of the vault box and downward to the depth of the skirt. The Contractor shall supply the hoses, fittings, gauges, and other appurtenances shown in the well vaults in the attached construction drawings or as directed by the Owner's Engineer.

Part 3: Execution

3.1 Well Installation

The Contractor shall install eleven (11) total recovery wells in individual vaults as depicted in the project construction drawings. The Contractor shall be responsible for obtaining any and all permits required to perform this work and obtaining utility clearance for below grade utilities. Any costs associated with performing the work, such as permitting fees, utility locate costs, and traffic maintenance, shall be paid by the Contractor. All wells shall be cleared to at least 6 ft below land surface (BLS) using a hand auger, to clear for underground utilities and other hazards.

Previous site assessment activities identified the site lithology as fine to medium sands with varying percentages of silt. No confining unit is expected to be encountered during well installation. No further assessment is required in this area, so soil sample collection for OVA testing or laboratory analysis will not be conducted. However, the driller shall log the lithology as close as possible from the cuttings and note any anomalies encountered during well installation.

Soil cuttings generated during hand-clearing shall be drummed, and either disposed of by the County or spread on site, at the direction of the Owner's Engineer. All recovery wells shall be installed using the rotary sonic drilling method or hollow stem auger.

Each recovery well shall be developed by purging, surging, or other acceptable method until the recovered water is relatively clear and free of turbidity. Well development water shall be containerized and pumped into the existing treatment system as directed by the Owner's Engineer. If necessary, and as directed by the Owner's Engineer, Contractor shall perform additional development activities such as swabbing or surging wells in order to fully develop well.

After well installation is completed, the Contractor shall excavate around the well to construct the well vault. Contractor shall ensure no deleterious material is at base of vault footprint and shall over-excavate and backfill with clean soil as necessary. Vault base soil shall be compacted to 98 percent Proctor; however, density testing for this area is at the discretion of the Owner's Engineer.

SUBMERSIBLE PUMPS AND CONTROL MODULES

Part 1: General

1.1 General Information

This specification details the type, model, configuration and installation of submersible pumps, their control modules, other appurtenances. Contractor shall field adjust conveyance discharge hose, securing wire and electrical leads to permit pump operation and maintenance. Contractor is responsible for proper setup of pump and appurtenances.

The Contractor shall supply all six submersible pumps including electrical leads, pump centralizers, conveyance hose, and any other appurtenances required for safe operation. The complete pump assemblies shall be installed inside all six recovery wells as shown in the project construction drawings. Recovery wells RW-6S and RW-7S will operate at the pump rate as designed, while the remaining four submersible pump packages specified for installation at recovery wells RW-9S, RW-10S, RW-11S, and RW-12S will operate at a recovery rate of only 2 gpm. The pump electrical/control leads and safety/hanging cables and clamps shall be supplied by the Contractor and installed as shown in the project construction drawings and approved by the Owner's Engineer. The specified pumps require a control module for programming; however, continuous inline communication to the submersible pumps is not required for proper operation. Since these units have historically been susceptible to electrical surges, the control module will be included in the control panel, which is outlined in a separate control panel specification.

1.2 Submittals

The Contractor shall submit such drawings and/or catalog cut sheet required for the installation and operation of the equipment. These drawings shall be accurate in every detail and shall contain all information necessary to relate the equipment to the specifications.

1.3 Warranty

All products shall be covered by a one-year warranty from manufacturers' defects. All services rendered shall be warranted for one year to be free of defects in craftsmanship. The Contractor shall be responsible for all warranties of craftsmanship, both for work that the Contractor performs and work performed by any subcontractors hired by the Contractor.

Part 2: Products

2.1 Shallow Aquifer Pumps Groundwater Pumps

Contractor shall provide six (6) Grundfos submersible pumps, model RediFlow3 22RF3-140, coupled to a ¾-HP, 230V, single-phase motor.

- A single Grundfos controller, Model CU300 shall be included in the control panel which will provide programming to the submersible pumps. Additional guidance for this unit is provided in the specifications for the remedial system control panel.
- Six 5-ft sections of Kflex electrical conduit with two 90-degree connectors

- 316 grade stainless steel 1/8-inch-diameter support cable with all accessories. The contractor shall check to make sure the weight of the pump is on the securing cable and not the discharge hose. All supporting connectors such as thimbles and wire rope clamps shall be corrosion resistant stainless steel.
- 30 ft of Tefzel cable to the surface. Site contractor will terminate the recovery pump's electrical feed in an explosion-proof junction box.
- Contractor shall provide 1½-inch-diameter petroleum resistant Goodyear Horizon hose or approved equal that shall thread directly into the submersible pump outlet and into the pitless adapter. Submersible pump conveyance hose installed in recovery wells RW-6S and RW-7S may require a hose length of approximately 40 ft since the hose exits out of the top of the well for connection. The hose for these two wells shall use a noncorrosive/nonabrasive guide to route the hose out of the well. Hose length for RW-9S through RW-12S should be approximately 36 ft based on the 35 ft below grade pump placement. However, the contractor shall determine the proper hose length that will place the submersible pump at 35 ft bg, allow pump weight to be held by securing cable, and not have hose kinking or pinching or hinder connection if length is too short.

Part 3: Execution

3.1 Submersible Pump Installation

Submersible pumps shall be installed by the Contractor into the recovery wells as shown in the project construction drawings. Flexible hosing of the same size as the pump discharge shall be used exclusively inside the recovery wells themselves, to transition to rigid piping no sooner than indicated on the construction drawings. All metal parts in the well or vault shall be stainless steel or other approved corrosion resistance metal. The Contractor shall supply and use only shielded cables for the motor leads; at no junction and for no length shall the motor leads be without shielding.

Construction Drawings/Schematics

CONSTRUCTION DRAWINGS

FOR

PHASE II REMEDIAL SYSTEM
LAKE COUNTY ASTATULA REFUELING FACILITY
FDEP FACILITY No. 358622951
13130 LANDFILL ROAD
ASTATULA, LAKE COUNTY, FLORIDA

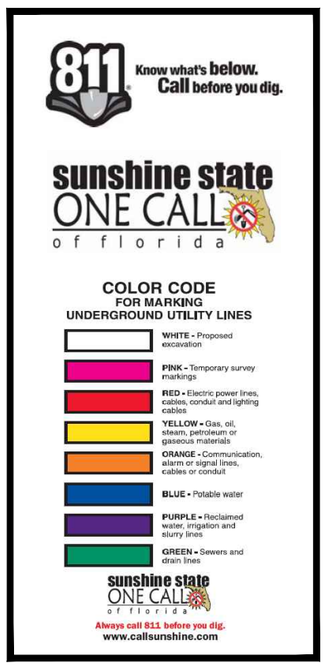

CB&I PROJECT NO. 153309

FEBRUARY 25, 2015

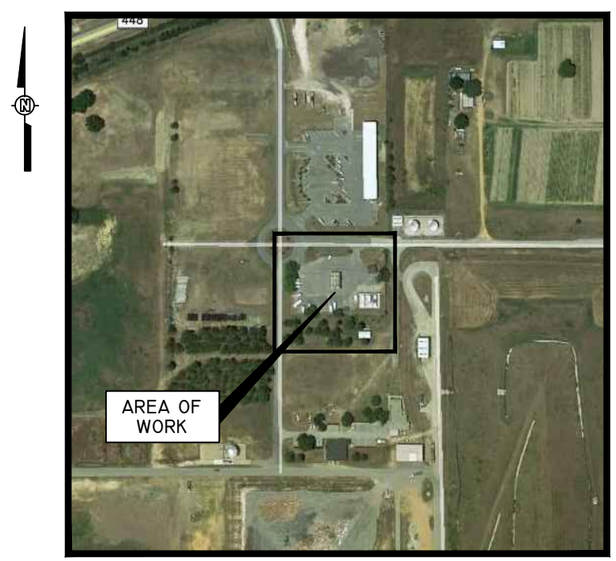

SITE MAP

SHEET INDEX	
DRAWING No.	TITLE
C-1	PHASE II REMEDIAL SYSTEM LAYOUT
C-2	TRENCH SECTIONS
C-3	DPE AND GROUNDWATER RECOVERY WELL DETAILS
C-4	DPE AND GROUNDWATER RECOVERY WELL DETAILS
C-5	SURFACE COVER AND CONCRETE SLAB DETAILS
C-6	REMEDIAL EQUIPMENT LAYOUT DETAILS
P-1	PROCESS AND INSTRUMENTATION DIAGRAM LEGEND
P-2	PROCESS AND INSTRUMENTATION DIAGRAM
P-3	PROCESS AND INSTRUMENTATION DIAGRAM

CB&I ENVIRONMENTAL & INFRASTRUCTURE, INC.
1228 WINTER GARDEN VINELAND ROAD
WINTER GARDEN, FLORIDA 34787
(407) 287-3200

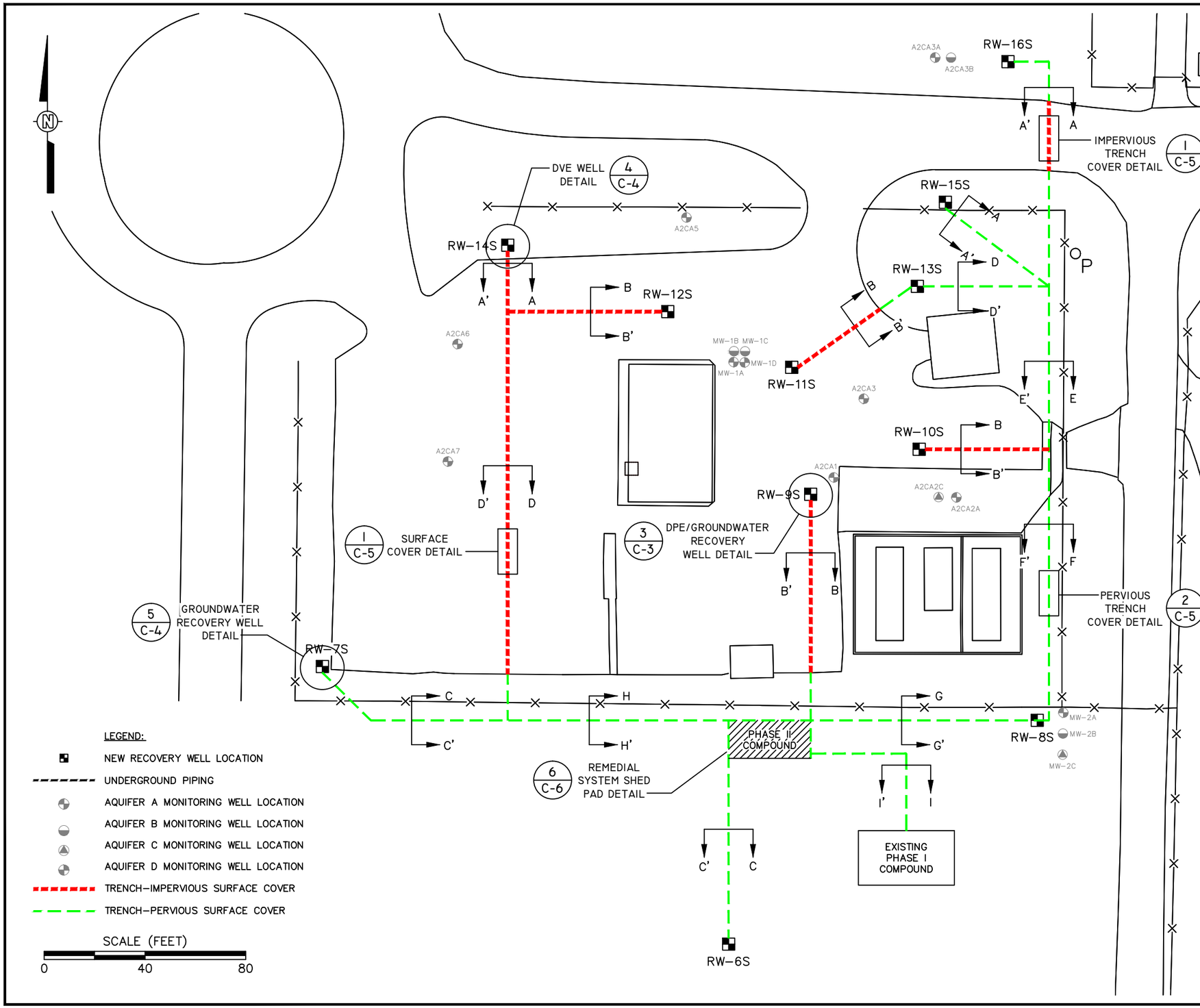

CB&I ENVIRONMENTAL & INFRASTRUCTURE, INC.
1228 WINTER GARDEN VINELAND RD
WINTER GARDEN, FLORIDA 34787
(407) 287-3200 OFFICE
(407) 287-3201 FAX

OFFICE:	DATE:	ACAD FILE:
WINTER GARDEN	2-25-15	0990B1

PHASE II REMEDIAL SYSTEM LAYOUT

CLIENT:	PM:
PUBLIC WORKS DEPARTMENT LAKE COUNTY, FLORIDA	EK

LOCATION:
LAKE COUNTY ASTATULA
REFUELING FACILITY
FDEP FACILITY No. 358622951
13130 COUNTY LANDFILL ROAD
TAVARES, FLORIDA 32778

DESIGNED:	DRAWN:	PROJECT NO.:	FIGURE:
EK	SDJF	153309	C-1

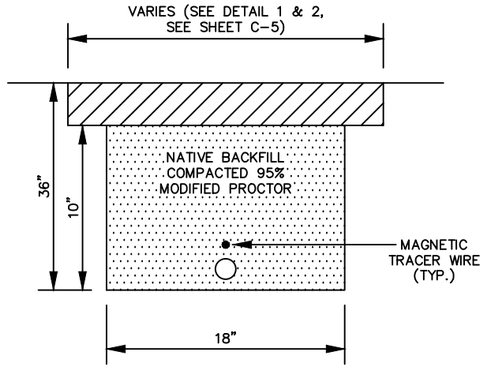

(1) 2" DIA. SCH 40 PVC DUAL PHASE PIPE

SECTION A-A'

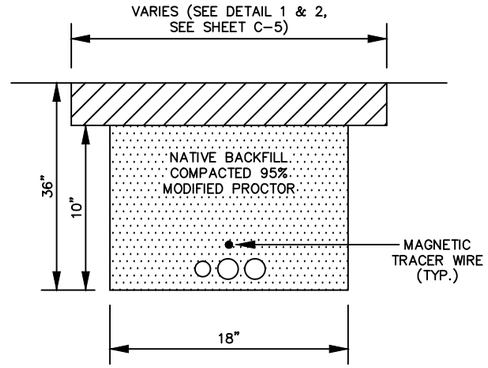

(1) 2" DIA. SCH 40 PVC RECOVERY PIPE
(1) 2" DIA. SCH 40 PVC DUAL PHASE PIPE
(1) 1" DIA. SCH 40 CONDUIT ELECTRICAL SUPPLY

SECTION B-B'

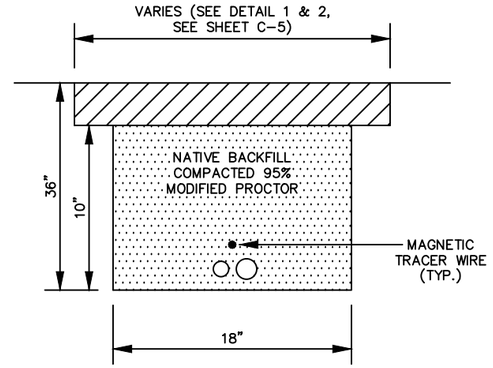

(1) 2" DIA. SCH 40 PVC RECOVERY PIPE
(1) 1" DIA. SCH 40 CONDUIT ELECTRICAL SUPPLY

SECTION C-C'

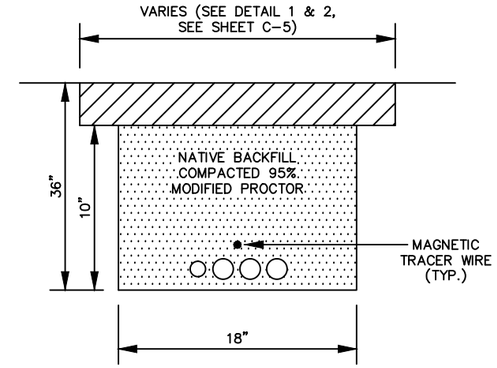

(1) 2" DIA. SCH 40 PVC RECOVERY PIPE
(2) 2" DIA. SCH 40 PVC DUAL PHASE PIPES
(1) 1" DIA. SCH 40 CONDUIT ELECTRICAL SUPPLY

SECTION D-D'

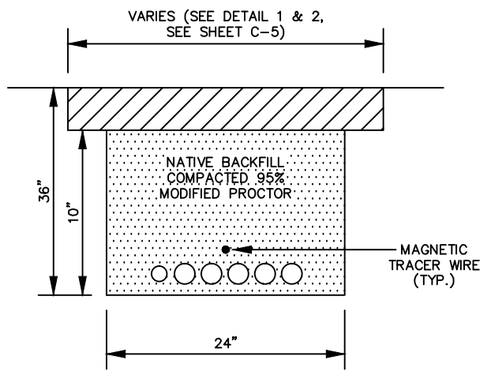

(1) 2" DIA. SCH 40 PVC RECOVERY PIPE
(4) 2" DIA. SCH 40 PVC DUAL PHASE PIPES
(1) 1" DIA. SCH 40 CONDUIT ELECTRICAL SUPPLY

SECTION E-E'

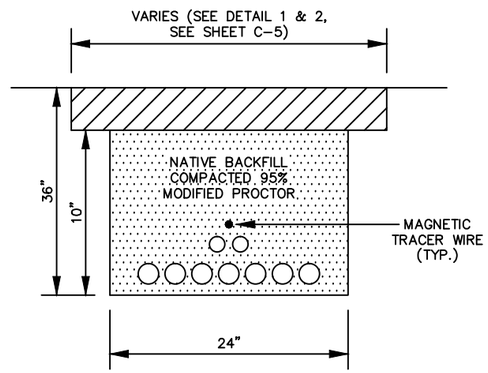

(2) 2" DIA. SCH 40 PVC RECOVERY PIPES
(5) 2" DIA. SCH 40 PVC DUAL PHASE PIPES
(2) 1" DIA. SCH 40 CONDUIT ELECTRICAL SUPPLY

SECTION F-F'

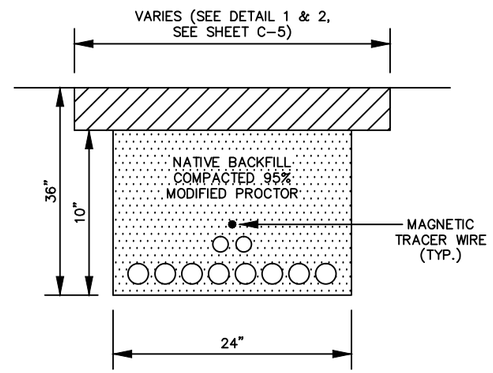

(2) 2" DIA. SCH 40 PVC RECOVERY PIPES
(6) 2" DIA. SCH 40 PVC DUAL PHASE PIPES
(2) 1" DIA. SCH 40 CONDUIT ELECTRICAL SUPPLY

SECTION G-G'

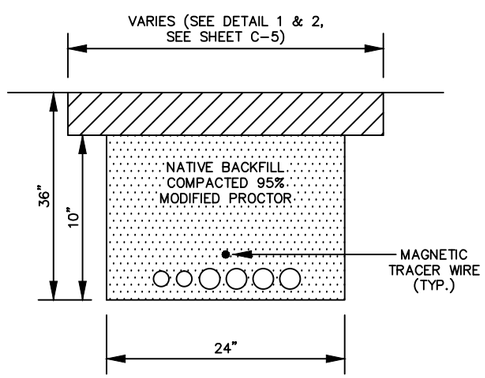

(2) 2" DIA. SCH 40 PVC RECOVERY PIPES
(2) 2" DIA. SCH 40 PVC DUAL PHASE PIPES
(2) 1" DIA. SCH 40 CONDUIT ELECTRICAL SUPPLY

SECTION H-H'

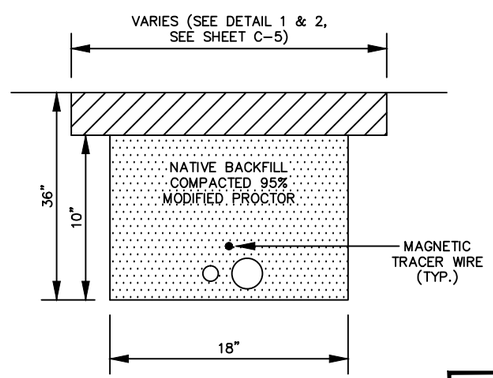

(1) 4" DIA. SCH 40 WATER CONVEYANCE (TO AIR STRIPPER)
(1) 1" DIA. CONTROL PIPE

SECTION I-I'

NOTES:

1. TRENCH DEPTH IS MINIMUM VALUES.
2. TRENCH SURFACE COVER TO MATCH EXISTING IMPERVIOUS/PERVIOUS CONDITION AS DEPICTED ON SHEET C-1. TRENCH SURFACE COVER DETAIL PROVIDED ON SHEET C-5.
3. CONTRACTOR SHALL ARRANGE PIPE ALIGNMENT TO ALLOW GREATEST COVER DEPTH. NO CROSS OVER PIPE ALLOWED.
4. PIPE TRACER WIRE SHALL BE A MINIMUM 12 AWG SOLID UL/UF AND BE PLACED ALONG TOP OF THE CENTER PIPE WITHIN TRENCH. SPLICE TRACER WIRE IN ACCORDANCE WITH MANUFACTURERS RECOMMENDATIONS.
5. CONTRACTOR SHALL PROVIDE WRITTEN GUIDANCE FROM PIPE MANUFACTURER ON HOW TO SECURELY CONNECT PIPE SECTIONS TOGETHER.
6. CONTRACTOR IS ENCOURAGED TO ALSO SUBSTITUTE HDPE PIPE SDR 11 (PE 4710 OR EQUAL) IN LIEU OF PVC SCHEDULE 40 FOR ALL PIPING IN TRENCH. IF HDPE PIPING IS USED THEN IT SHOULD BE CONTINUOUS WITH NO BREAKS/FUSED JOINTS FROM WELL VAULT TO COMPOUND.
7. CONTRACTOR SHALL PRESSURE TEST ALL PIPING RUNS FROM WELL VAULT TO COMPOUND. PRESSURE TEST SHALL BE HYDRSTATIC FOR ONE HOUR DURATION AT 60 PSI. CONTRACTOR SHALL PROVIDE TESTING PROTOCOL TO OWNERS ENGINEER AT LEAST TWO DAYS IN ADVANCE OF PIPE PRESSURE TEST.

CB&I ENVIRONMENTAL & INFRASTRUCTURE, INC.
1228 WINTER GARDEN VINELAND ROAD
WINTER GARDEN, FLORIDA 34787
(407) 287-3200 OFFICE
(407) 287-3201 FAX

OFFICE: WINTER GARDEN	DATE: 2-25-15	ACAD FILE: 3309B3	
TRENCH SECTIONS			
CLIENT: PUBLIC WORKS DEPARTMENT LAKE COUNTY, FLORIDA			PM: EK
LOCATION: LAKE COUNTY ASTATULA REFUELING FACILITY FDEP FACILITY No. 358622951 13130 COUNTY LANDFILL ROAD TAVARES, FLORIDA 32778			
DESIGNED: EK	DRAWN: SDJF	PROJECT NO.: 153309	FIGURE: C-2

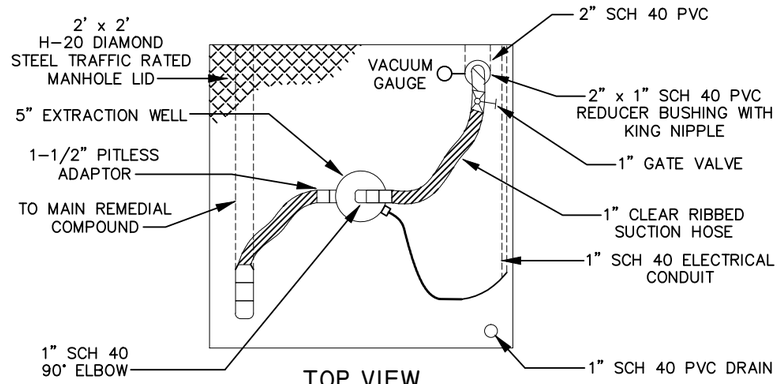

TOP VIEW

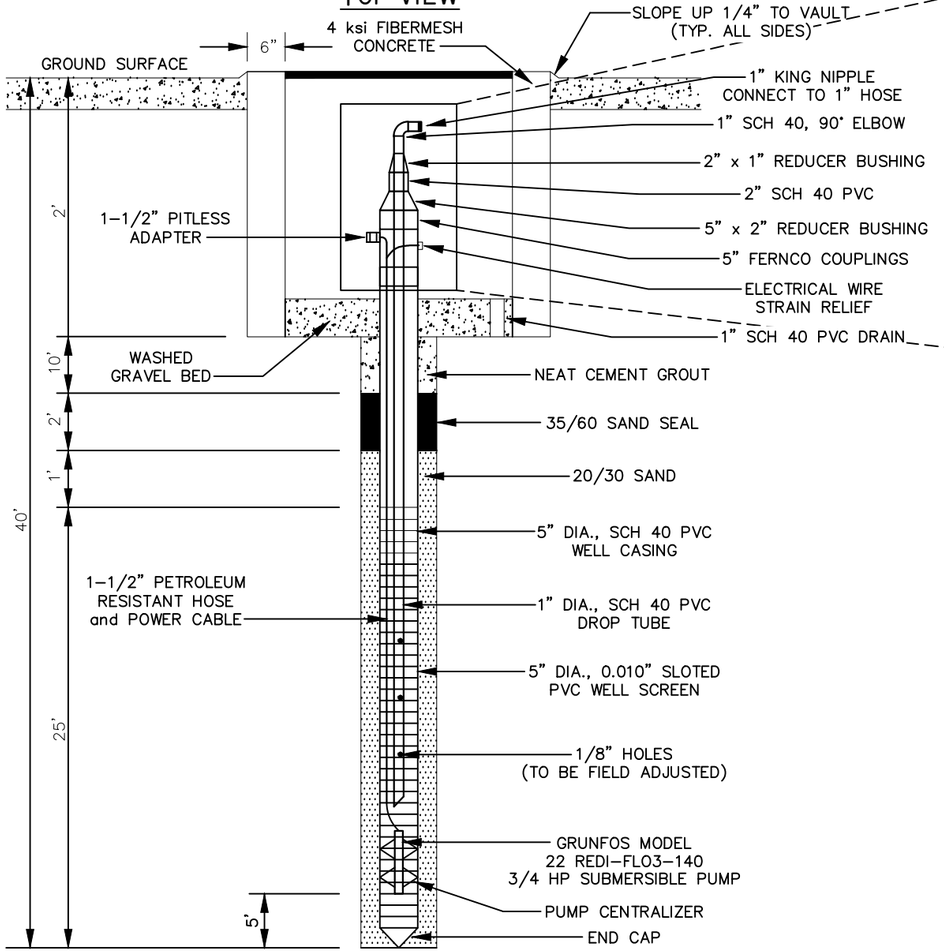

DPE/GROUNDWATER RECOVERY WELL DETAIL (3 / C-1)
(RW-9S, RW-10S, RW-11S, RW-12S)
NOT TO SCALE

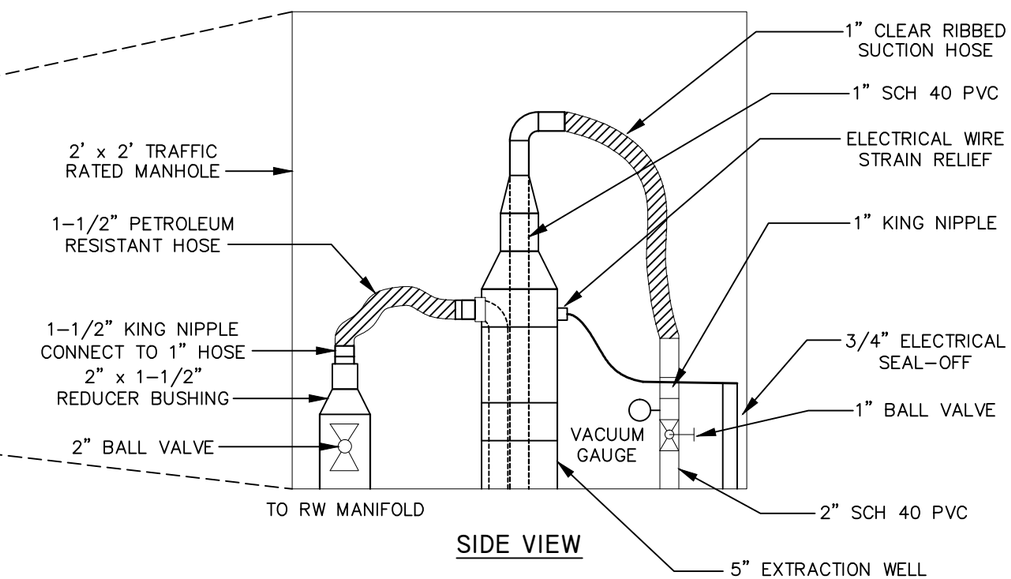

SIDE VIEW

NOTES:

1. CONTRACTOR SHALL ARRANGE HOSES, WIRES, VALVES, GAUGES IN A NEAT ARRANGEMENT.
2. GAUGE FACE SHALL BE EASILY READ FROM A VIEW POINT ABOVE THE GAUGE.
3. VALVES SHALL BE EASILY ACUATED WITHOUT MOVING HOSES/WIRES.
4. CONTRACTOR SHALL VERIFY GRAVEL BED AND DRAIN PIPE ARE ADEQUATE TO KEEP WATER FROM ACCUMULATING IN VAULT.
5. CONTRACTOR SHALL PURCHASE CORROSION RESISTANT VAULT OR APPLY EPOXY BASE ANTICORROSION COATING.

CB&I ENVIRONMENTAL & INFRASTRUCTURE, INC.
1228 WINTER GARDEN VINELAND ROAD
WINTER GARDEN, FLORIDA 34787
(407) 287-3200 OFFICE
(407) 287-3201 FAX

OFFICE: WINTER GARDEN	DATE: 2-25-15	ACAD FILE: 3309B4	
DPE/GROUNDWATER RECOVERY WELL DETAILS			
CLIENT: PUBLIC WORKS DEPARTMENT LAKE COUNTY, FLORIDA			PM: EK
LOCATION: LAKE COUNTY ASTATULA REFUELING FACILITY FDEP FACILITY No. 358622951 13130 COUNTY LANDFILL ROAD TAVARES, FLORIDA 32778			
DESIGNED: EK	DRAWN: SDJF	PROJECT NO.: 153309	FIGURE: C-3

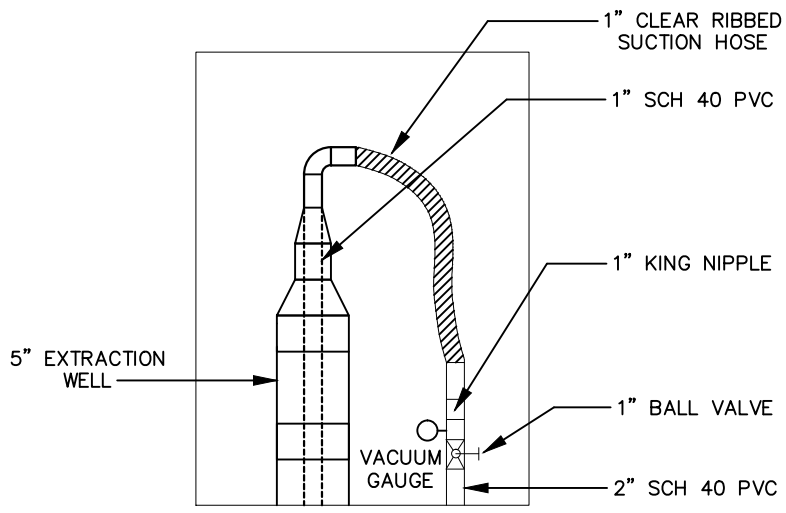

SIDE VIEW

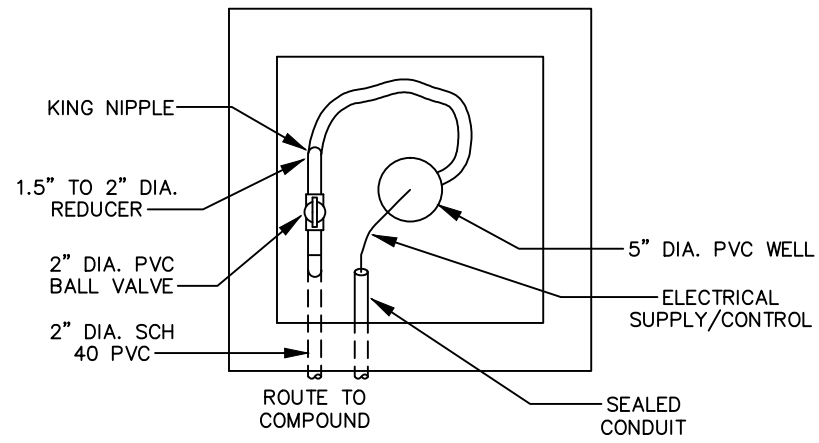

TOP VIEW

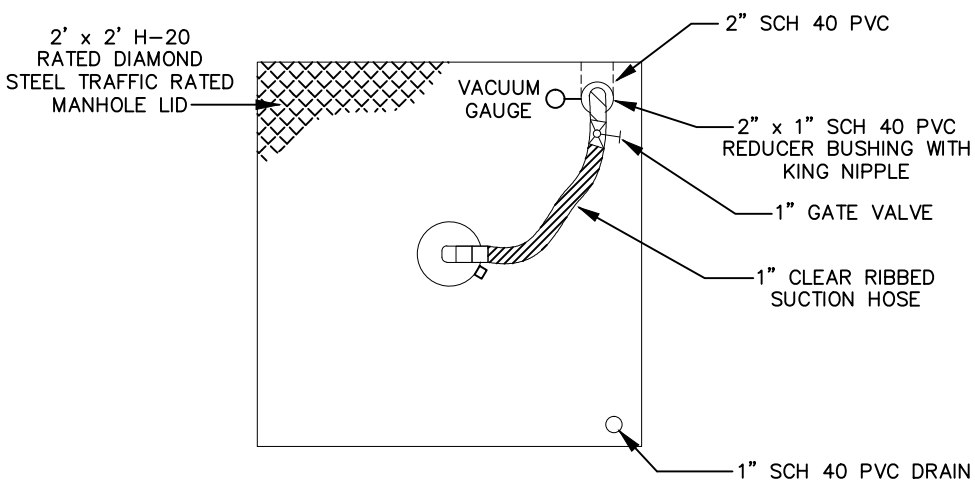

TOP VIEW

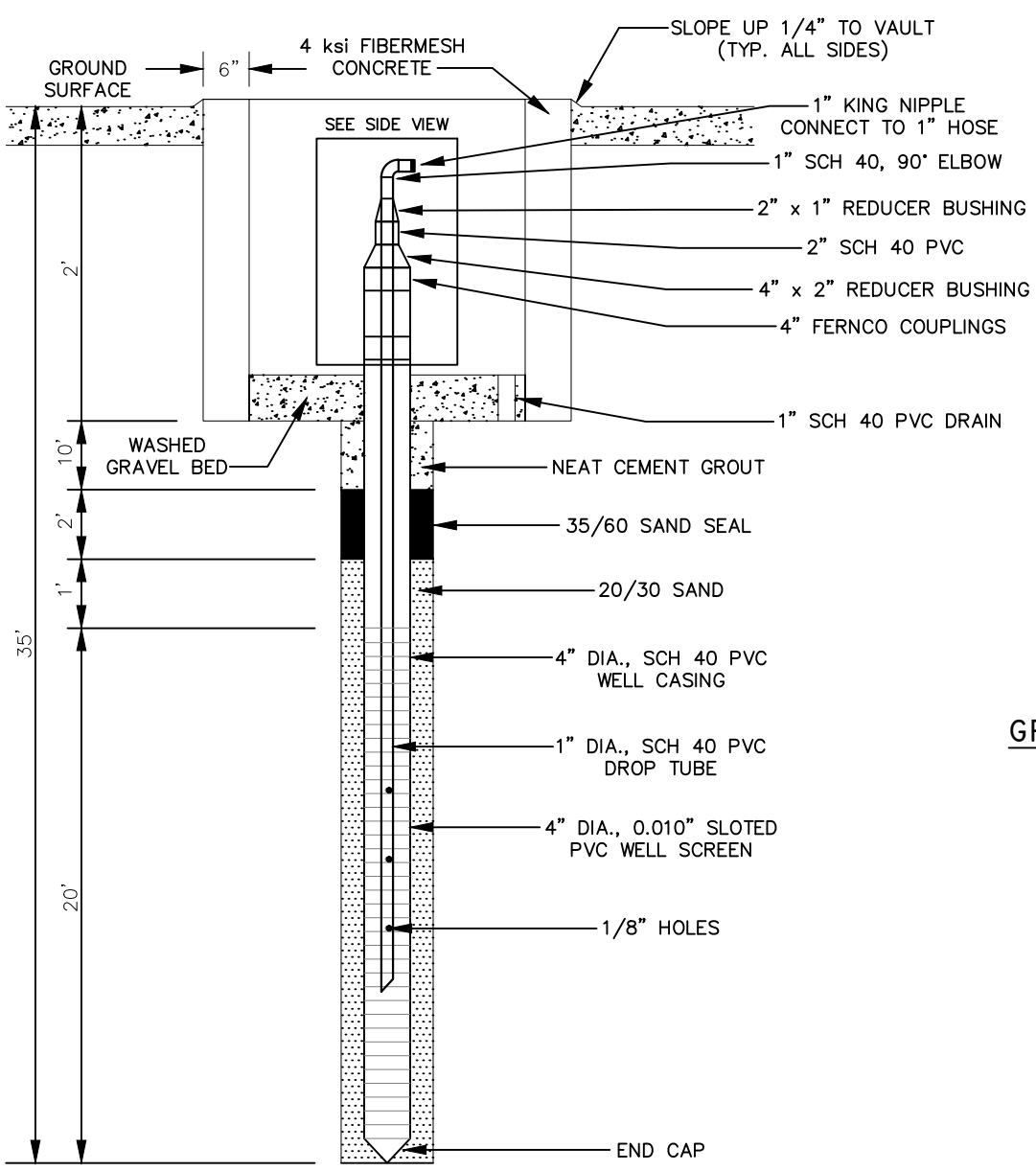

DPE WELL DETAIL
(RW-8S, RW-13S, RW-14S, RW-15S, RW-16S)
NOT TO SCALE
4 / C-1

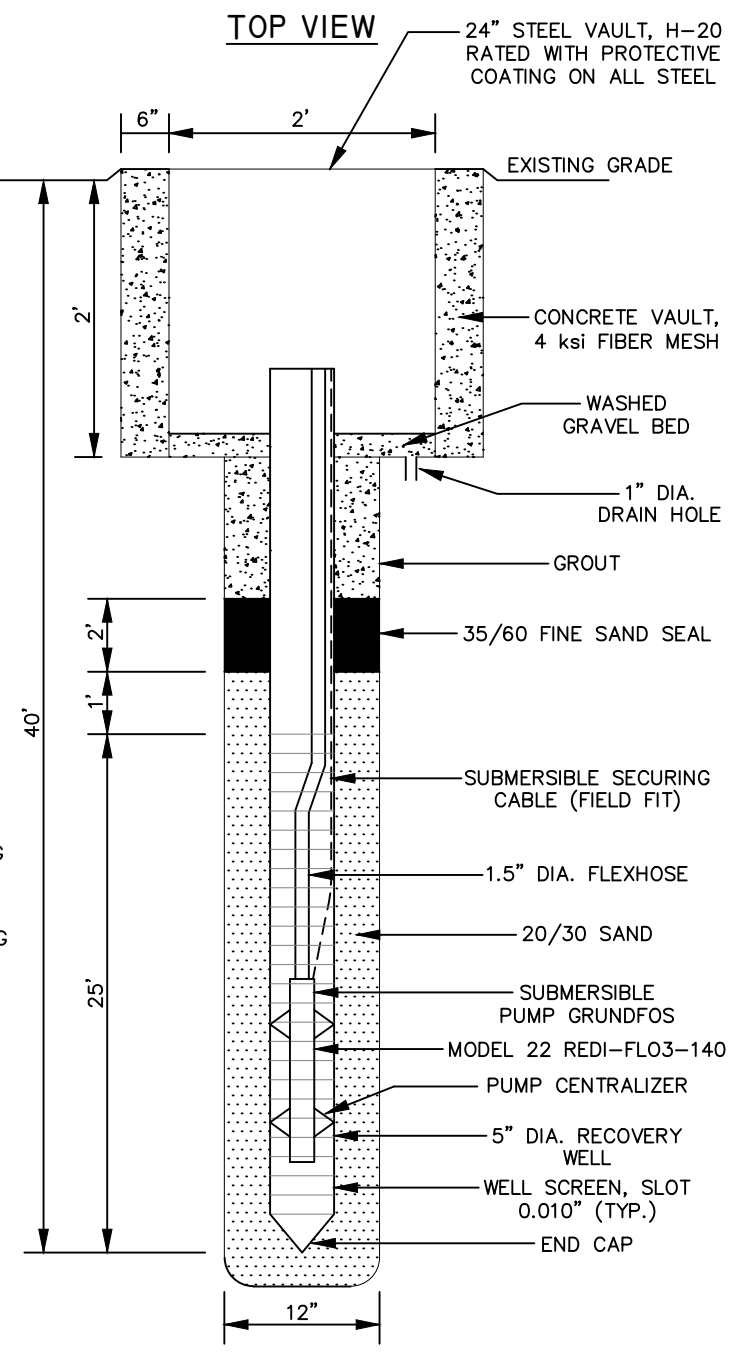

GROUNDWATER RECOVERY WELL DETAIL
(RW-6S, RW-7S)
NOT TO SCALE
5 / C-1

NOTE:

ALL PIPES and CONDUIT ROUTED UNDER VAULT WALLS.

CB&I ENVIRONMENTAL & INFRASTRUCTURE, INC.
1228 WINTER GARDEN VINELAND ROAD
WINTER GARDEN, FLORIDA 34787
(407) 287-3200 OFFICE
(407) 287-3201 FAX

OFFICE: WINTER GARDEN	DATE: 2-25-15	ACAD FILE: 3309B2	
DPE AND GROUNDWATER RECOVERY WELL DETAILS			
CLIENT: PUBLIC WORKS DEPARTMENT LAKE COUNTY, FLORIDA			PM: EK
LOCATION: LAKE COUNTY ASTATULA REFUELING FACILITY FDEP FACILITY No. 358622951 13130 COUNTY LANDFILL ROAD TAVARES, FLORIDA 32778			
DESIGNED: EK	DRAWN: SDJF	PROJECT NO.: 153309	FIGURE: C-4

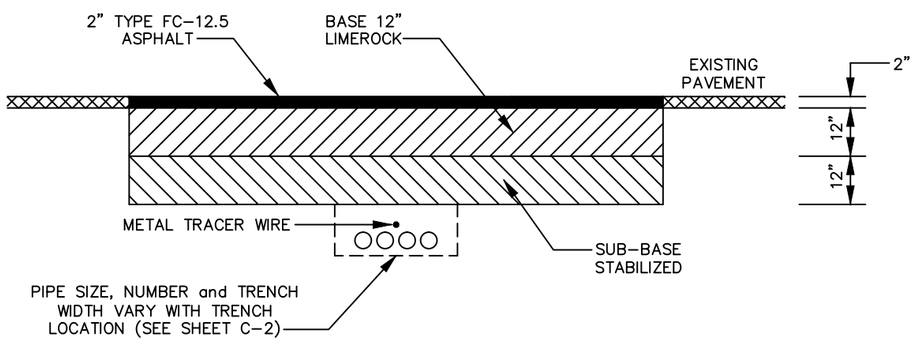

IMPERVIOUS TRENCH SECTION DETAIL (1 / C-1)

NOTES:

1. PLACE BASE IN 6" LIFTS, COMPACT EACH LIFT TO 98% PER AASHTO T-180, PRIMED AND SANDED.
2. COMPACT STABILIZED SUB-BASE TO MINIMUM LBR 40 AND 98% PER AASHTO T-180.
3. CONTRACTOR TO SAWCUT EXISTING PAVEMENT FOR INSTALLATION OF ALL PIPING. TYPICAL TRENCH SECTION TO VARY FROM 6' TO 8' DEPENDING ON CONDITIONS AND AS APPROVED BY OWNER'S ENGINEER.
4. COMPACTION TESTING FOR BASE AND SUB-BASE SHALL BE PERFORMED AT EACH TRENCH LEG AND/OR EVERY 100 FT OF TRENCHING.
5. CONTRACTOR SHALL SUBMIT COMPACTION BASELINE TEST RESULTS PRIOR TO EXCAVATION.
6. CONTRACTOR SHALL REWORK ANY BASE/SUB-BASE AREAS NOT MEETING COMPACTION SPECIFICATIONS UNTIL COMPACTION LEVEL ACHIEVED OR AS DIRECTED BY ENGINEER.

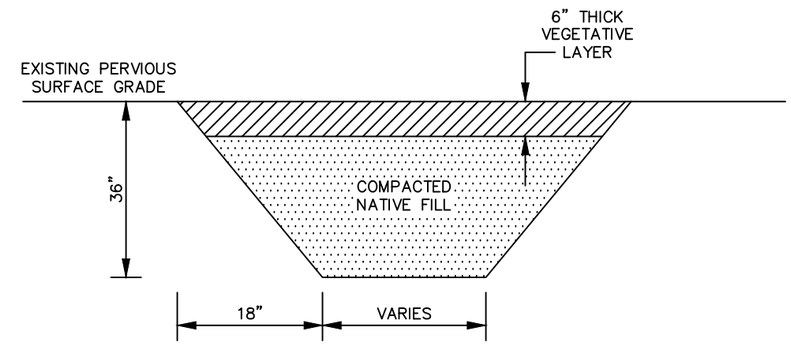

PERVIOUS TRENCH COVER DETAIL (2 / C-1)

NOTES:

1. COMPACT NATIVE BACKFILL SOIL IN 15" LIFT TO 95% ASTM D1557.
2. CONTRACTOR SHALL PROVIDE LABORATORY PROCTOR TEST RESULTS PRIOR TO COMMENCING TRENCH EXCAVATION.
3. TRENCH COMPACTION TESTING SHALL BE PERFORMED AT EACH TRENCH LEG AND/OR AT 100 FT INTERVAL.
4. VEGETATIVE LAYER SHALL CONTAIN SUFFICIENT ORGANICS TO SUPPORT ESTABLISHMENT OF GRASS.
5. ESTABLISHMENT OF GRASS COVER IN TRENCH AREA MAY BE BY SOD AND/OR HYDROSEED OR OTHER APPROVED METHOD. CONTRACTOR SHALL SUBMIT NOTICE OF SELECTED METHOD IN SUFFICIENT DETAIL TO EVALUATE THE TYPE OF GRASS, INSTALLATION METHOD AND ESTIMATED SURVIVAL RATE.

CB&I ENVIRONMENTAL & INFRASTRUCTURE, INC.
1228 WINTER GARDEN VINELAND ROAD
WINTER GARDEN, FLORIDA 34787
(407) 287-3200 OFFICE
(407) 287-3201 FAX

OFFICE:	DATE:	ACAD FILE:
WINTER GARDEN	2-25-15	3309B8

SURFACE COVER AND CONCRETE SLAB DETAILS

CLIENT:	PM:
PUBLIC WORKS DEPARTMENT LAKE COUNTY, FLORIDA	EK

LOCATION:
LAKE COUNTY ASTATULA
REFUELING FACILITY
FDEP FACILITY No. 358622951
13130 COUNTY LANDFILL ROAD
TAVARES, FLORIDA 32778

DESIGNED:	DRAWN:	PROJECT NO.:	FIGURE:
EK	SDJF	153309	C-5

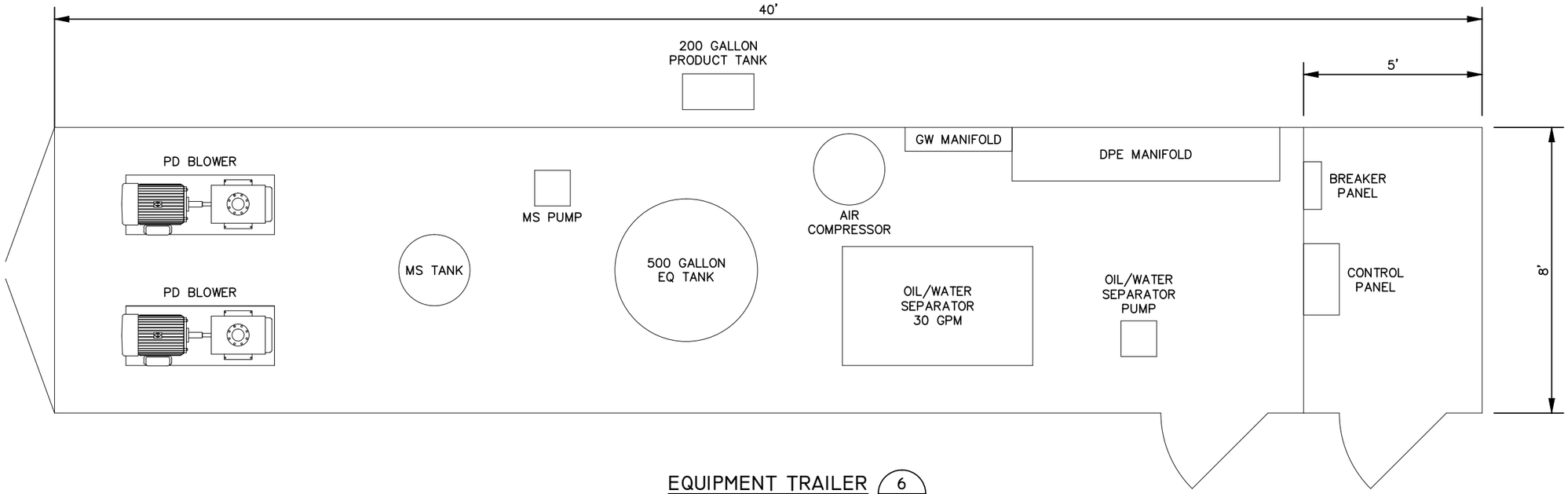

EQUIPMENT TRAILER (6 / C-1)

NOT TO SCALE

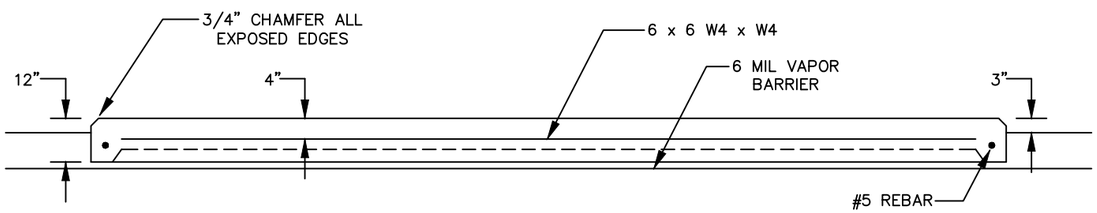

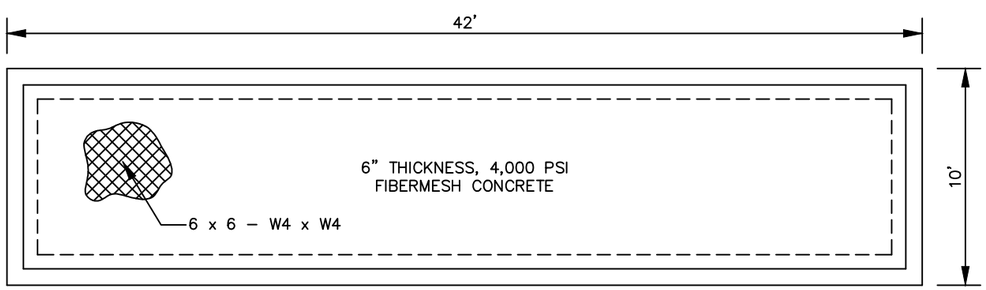

REMEDIAL SYSTEM SLAB DETAIL (6 / C-1)

NOTES:

1. CLEAR AND GRUB SLAB FOOTPRINT TO REMOVE ORGANIC MATTER. BACKFILL WITH CLEAN SOIL AS NECESSARY.
2. COMPACT SOIL BASE TO 98% MODIFIED PROCTOR ASTM D1557.
3. CONSTRUCT JOINTS AT 10 FOOT INTERVALS. JOINTS TO BE FILLED WITH FLEXIBLE URETHANE–EPOXY BLEND JOINT COMPOUND. CONTRACTOR SHALL SUBMIT PRODUCT CUT SHEET FOR APPROVAL.
4. WET CURE CONCRETE FOR MINIMUM 2 WEEKS AFTER PLACEMENT OR AS DIRECTED BY OWNER'S ENGINEER.
5. BROOM FINISH SURFACE.
6. POSITION WELDED WIRE FABRIC & REBAR USING APPROVED REBAR CHAIRS.
7. REMEDIAL TRAILER LAYOUT IS CONCEPTUAL AND THE CONTRACTOR SHALL PROVIDE FINAL LAYOUT AFTER CONTRACT AWARD FOR APPROVAL.
8. EQUIPMENT TRAILER TO BE SET ON PAD ONLY AFTER 95% CONCRETE STRENGTH ACHIEVED.
9. CONTRACTOR TO CENTER EQUIPMENT TRAILER ON PAD.

CB&I ENVIRONMENTAL & INFRASTRUCTURE, INC.
1228 WINTER GARDEN VINELAND ROAD
WINTER GARDEN, FLORIDA 34787
(407) 287-3200 OFFICE
(407) 287-3201 FAX

OFFICE: WINTER GARDEN	DATE: 2–25–15	ACAD FILE: 3309B6	
REMEDIAL EQUIPMENT LAYOUT DETAILS			
CLIENT: PUBLIC WORKS DEPARTMENT LAKE COUNTY, FLORIDA			PM: EK
LOCATION: LAKE COUNTY ASTATULA REFUELING FACILITY FDEP FACILITY No. 358622951 13130 COUNTY LANDFILL ROAD TAVARES, FLORIDA 32778			
DESIGNED: EK	DRAWN: SDJF	PROJECT NO.: 153309	FIGURE: C-6

LINE IDENTIFICATION CODES

LINE NUMBERING

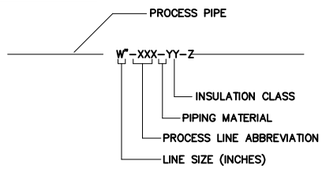

PIPING MATERIAL IDENTIFICATION

CPVC	CHLORINATED POLYVINYL CHLORIDE
CS	CARBON STEEL
COP	COPPER
CPP	CORRUGATED PLASTIC PIPE
CIP	CAST IRON PIPE
DIP	DUCTILE IRON PIPE
FH	FLEXIBLE HOSE
GAL	GALVANIZED STEEL PIPE
NYL	NYLON
PE	POLYETHYLENE PIPE
PP	POLYPROPYLENE PIPE
PVC	POLYVINYL PIPE
RUB	RUBBER HOSE
SS	STAINLESS STEEL

PROCESS LINE ABBREVIATIONS

AIR	AIR, ATMOSPHERIC PRESSURE
BW	BACKWASH
CA	COMPRESSED AIR
CD	CONDENSATE
CF	CHEMICAL FEED
CGW	CONTAMINATED GROUNDWATER
D	DRAIN
EFF	EFFLUENT
EXH	EXHAUST
GW	GROUNDWATER
LFG	LANDFILL GAS
NPW	NON-POTABLE WATER
P	PRODUCT
PW	POTABLE WATER
S	SANITARY
SL	SLUDGE
SP	SAMPLE PORT
STS	STORM SEWER
TF	TOTAL FLUIDS
V	VENT
VAP	VAPOR

LINE CODING

- PROCESS FLOW
- PNEUMATIC SIGNAL
- WIRELESS SIGNAL

ELECTRICAL SIGNALS

- 4-20mA / LOW VOLTAGE
- LINE VOLTAGE
- IS

PROCESS PIPE CONVEYANCE

- LIQUID CONDUIT
- VAPOR CONDUIT

VALVE AND PIPING SYMBOLS

- GLOBE VALVE
- GATE VALVE
- BUTTERFLY VALVE
- CHECK VALVE
- PLUG VALVE
- 3-WAY VALVE
- ANGLE VALVE
- RELIEF OR SAFETY VALVE
- BALL VALVE
- GLOBE VALVE
- SELF-CONTAINING PRESSURE REGULATING VALVE
- KNIFE GATE VALVE
- BP — BACKFLOW PREVENTER
- NO — NORMALLY OPEN
- NC — NORMALLY CLOSED
- FLEXIBLE HOSE
- FLEXIBLE COUPLING
- MOTOR DRIVEN
- S — SAMPLE PORT
- BASKET TYPE STRAINER
- Y-TYPE STRAINER
- DUPLEX STRAINER
- SLEEVE COUPLING (SC)
- FLOOR DRAIN
- EQUIPMENT DRAIN
- CLEANOUT (CO)
- REMOVABLE PLUG
- REMOVABLE CAP
- EXHAUST TO ATMOSPHERE (INSIDE)
- EXHAUST TO ATMOSPHERE (OUTSIDE)
- REDUCER
- UNION
- QUICK DISCONNECT COUPLING
- BF — BLIND FLANGE
- FLANGE
- DAMPER
- TEST PORT WITH STOP COCK VALVE

VALVE OPERATOR SYMBOLS

- S — SOLENOID
- M — MOTOR, ELECTRIC
- P — PNEUMATIC
- DIAPHRAGM WITH POSITIONER
- HANDWHEEL OR LEVER
- CHAINWHEEL

PRIMARY ELEMENT SYMBOLS – FLOW

- ORIFICE PLATE
- PITOT TUBE
- THERMAL MASS FLOW METER
- ROTOMETER
- FLUME
- WEIR
- TURBINE OR PROPELLOR TYPE METER
- MAGNETIC FLOW METER
- TOTALING FLOW METER

EQUIPMENT SYMBOLS

- PUMP
- PNEUMATIC DIAPHRAGM PUMP
- LIQUID RING VACUUM PUMP
- BLOWER
- AIR COMPRESSOR
- POSITIVE DISPLACEMENT PUMP
- SCREW PUMP

FUNCTIONAL ABBREVIATIONS

DO	DISSOLVED OXYGEN	OC	OPEN-CLOSE
FC	FAIL CLOSED	OO	ON-OFF (MAINTAINED)
FI	FAIL INTERMINATE	ORP	OXIDATION REDUCTION POTENTIAL
FL	FAIL LOCKED	OSC	OPEN-STOP-CLOSE (MOMENTARY)
FO	FAIL OPEN	SS	START-STOP (MONENTARY)
HOA	HAND-OFF-AUTOMATIC	>	HIGH SELECT
I/I	CURRENT-TO-CURRENT	<	LOW SELECT
I/P	CURRENT-TO-PNEUMATIC		
LEL	LOWER EXPLOSIVE LIMIT		
LR	LOCAL-REMOTE		

INSTRUMENT IDENTIFICATION

FIT 100A

FIT-100A
- SUFFIX (NOT NORMALLY USED)
- LOOP NUMBER
- SUCCEEDING LETTERS
- FIRST LETTER

- LEL — LEL METER
- TT — TEMPERATURE TRANSMITTER
- DPT — DIF PRESSURE TRANSMITTER
- PT — PRESSURE TRAMSMITTER
- VT — VACUUM TRANSMITTER
- PS — PRESSURE SWITCH
- TS — TEMP SWITCH

GENERAL INSTRUMENT SYMBOLS

- LOCALLY MOUNTED
- FRONT-OF PANEL MOUNTED
- BACK-OF-PANEL MOUNTED
- I — INTERLOCK
- P — PURGE
- PLC FUNCTION BLOCK

INSTRUMENT IDENTIFICATION TABLE

	FIRST LETTER		SUCCEEDING LETTERS		
	MEASURED OR INITIATING VARIABLE	MODIFIER	READOUT OR PASSIVE FUNCTION	OUTPUT FUNCTION	MODIFIER
A	ANALYSIS		ALARM		
B	BURNER FLAME				
C	CONDUCTIVITY			CONTROL	
D	DENSITY (SP, GR)	DIFFERENTIAL		DRIVE	
E	VOLTAGE		PRIMARY ELEMENT		
F	FLOW RATE	RATIO			
G	GAUGING (DIMENSIONAL)		GLASS		
H	HAND (MANUAL)				HIGH
I	CURRENT		INDICATE		
J	POWER	SCAN			
K	TIME OR SCHEDULE			CONTROL STATION	
L	LEVEL		LIGHT (PILOT)		LOW
M	MOISTURE OR HUMIDITY				MIDDLE
N					
O			ORIFICE		
P	PRESSURE		POINT (TEST)		
Q	QUANT. OR EVENT	INTEGRATE			
R	RADIOACTIVITY		RECORD OR PRINT		
S	SPEED OR FREQ.	SAFETY		SWITCH	
T	TEMPERATURE			TRANSMIT	
U	ULTRAVIOLET		MULTIFUNCTION		
V	VISCOSITY			VALVE OR DAMPER	
W	WEIGHT OR FORCE		WELL		
X	THERMOCOUPLE		UNCLASSIFIED		
Y	VIBRATION			RELAY OR COMPUTE	
Z	POSITION			DRIVE, ACTUATE	

CB&I ENVIRONMENTAL & INFRASTRUCTURE, INC.
1228 WINTER GARDEN VINELAND ROAD
WINTER GARDEN, FLORIDA 34787
(407) 287-3200 OFFICE
(407) 287-3201 FAX

OFFICE:	DATE:	ACAD FILE:
WINTER GARDEN	2-25-15	3309B18

PROCESS AND INSTRUMENTATION DIAGRAM LEGEND

CLIENT:	PM:
PUBLIC WORKS DEPARTMENT LAKE COUNTY, FLORIDA	EK

LOCATION:
LAKE COUNTY ASTATULA
REFUELING FACILITY
FDEP FACILITY No. 358622951
13130 COUNTY LANDFILL ROAD
TAVARES, FLORIDA 32778

DESIGNED:	DRAWN:	PROJECT NO.:	FIGURE:
EK	SDJF	153309	P-1

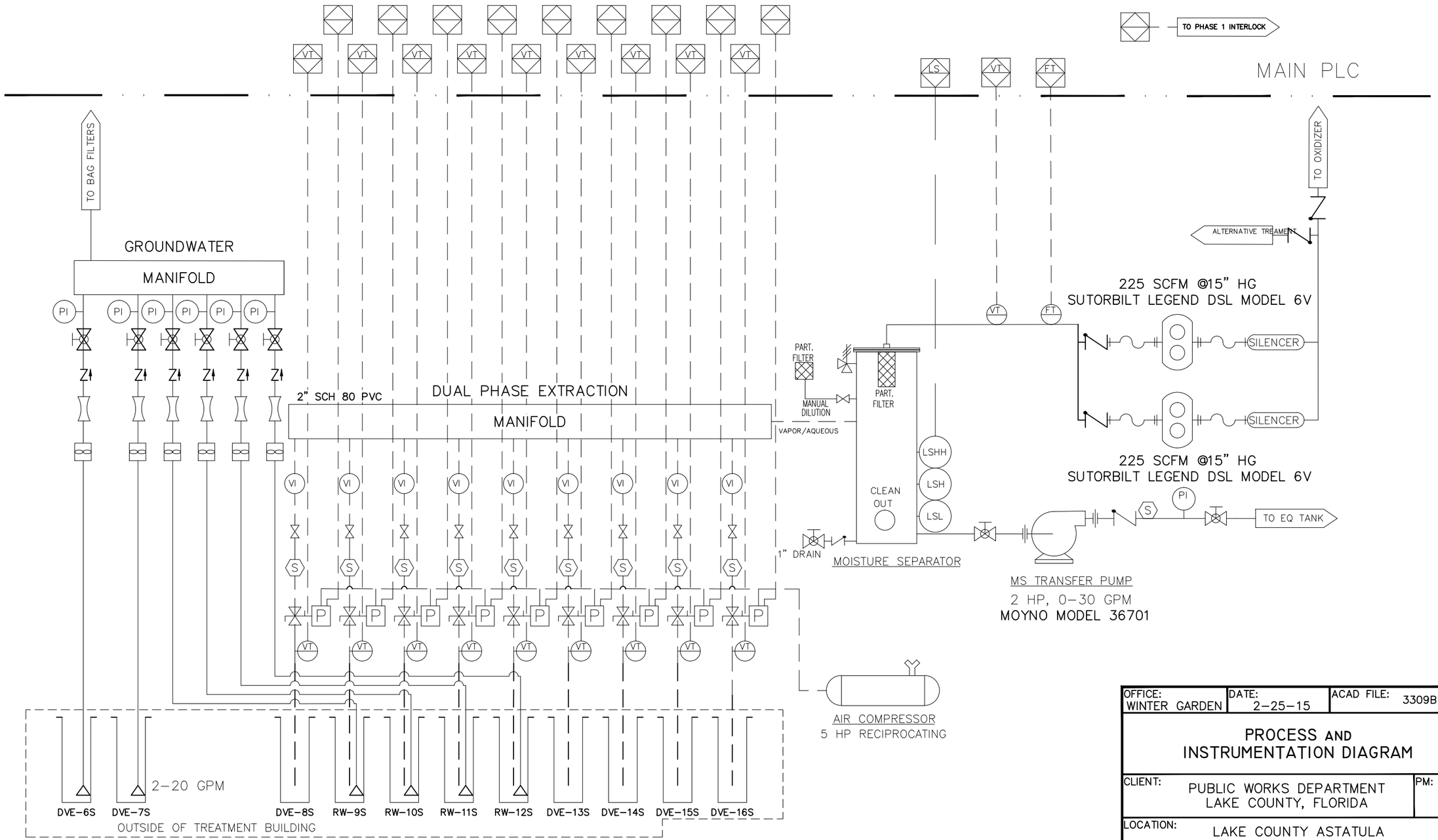

OFFICE: WINTER GARDEN	DATE: 2-25-15	ACAD FILE: 3309B16

PROCESS AND INSTRUMENTATION DIAGRAM

CLIENT:	PM:
PUBLIC WORKS DEPARTMENT LAKE COUNTY, FLORIDA	EK

LOCATION:
LAKE COUNTY ASTATULA
REFUELING FACILITY
FDEP FACILITY No. 358622951
13130 COUNTY LANDFILL ROAD
TAVARES, FLORIDA 32778

DESIGNED:	DRAWN:	PROJECT NO.:	FIGURE:
EK	SDJF	153309	P-2

CB&I ENVIRONMENTAL & INFRASTRUCTURE, INC.
1228 WINTER GARDEN VINELAND ROAD
WINTER GARDEN, FLORIDA 34787
(407) 287-3200 OFFICE
(407) 287-3201 FAX

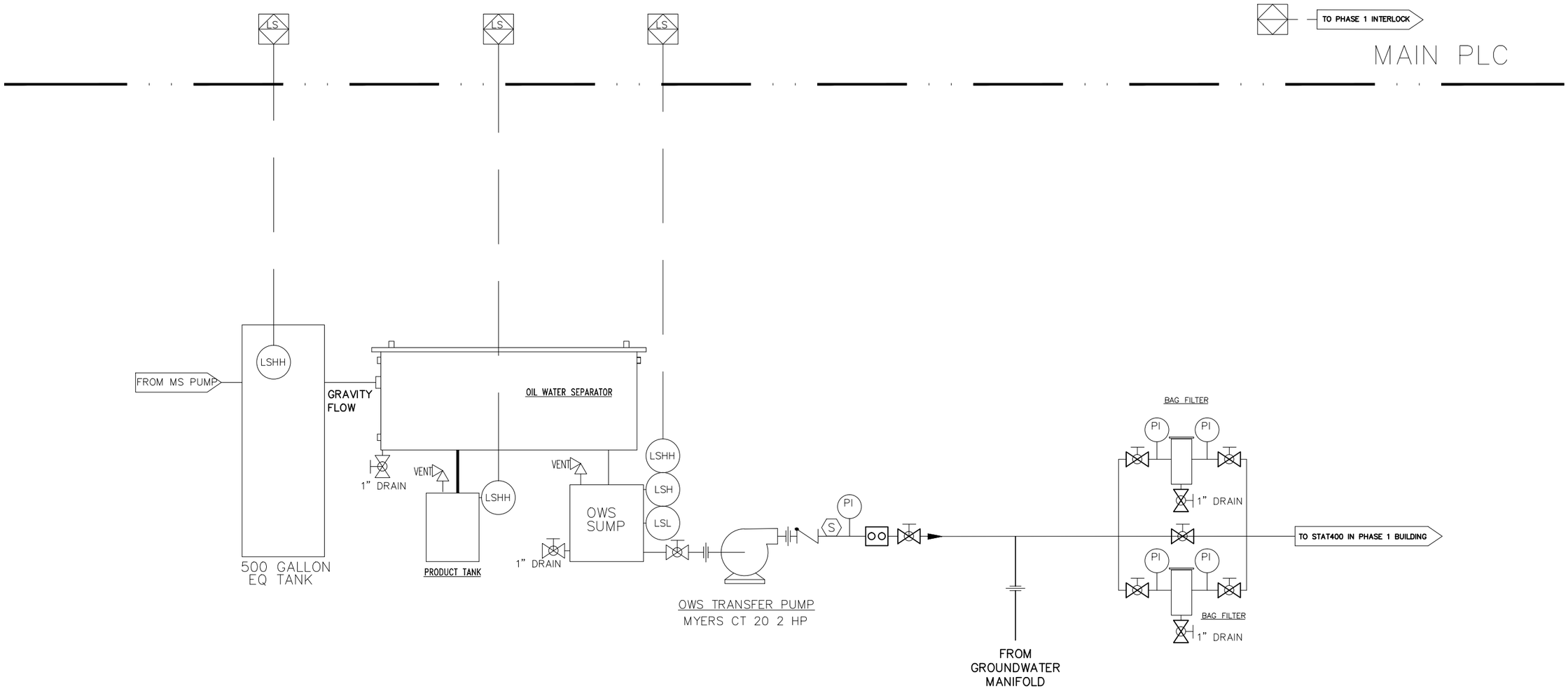

OFFICE: WINTER GARDEN	DATE: 2-25-15	ACAD FILE: 3309B17

PROCESS AND INSTRUMENTATION DIAGRAM

CLIENT: PUBLIC WORKS DEPARTMENT LAKE COUNTY, FLORIDA	PM: EK

LOCATION:
LAKE COUNTY ASTATULA
REFUELING FACILITY
FDEP FACILITY No. 358622951
13130 COUNTY LANDFILL ROAD
TAVARES, FLORIDA 32778

CB&I ENVIRONMENTAL & INFRASTRUCTURE, INC.
1228 WINTER GARDEN VINELAND ROAD
WINTER GARDEN, FLORIDA 34787
(407) 287-3200 OFFICE
(407) 287-3201 FAX

DESIGNED:	DRAWN:	PROJECT NO.:	FIGURE:
EK	SDJF	153309	P-3

COMPANY/CUSTOMER: CARBONAIR
PROJECT DESCRIPTION: ASTATULA REFUELING
SALES ORDER NUMBER: ITEM A

PROJECT NAME ASTATULA_MAIN
RESPONSIBLE FOR PROJECT AJH

REVISION HISTORY

REV	REVISION COMMENTS	CREATED BY	DATE
0	RELEASED FOR SUBMITTAL	AJH	2011-01-14
A	PRODUCTION AS BUILT	MAK	2011-04-28

PANEL CERTIFICATION

UL698A

NUMBER OF PAGES 5

THIS DOCUMENT IS THE COPYRIGHTED PROPERTY OF DRC, INC. AND MAY NOT BE REPRODUCED WITHOUT DRC WRITTEN PERMISSION OR USED FOR OTHER THAN DRC AUTHORIZED PURPOSES.

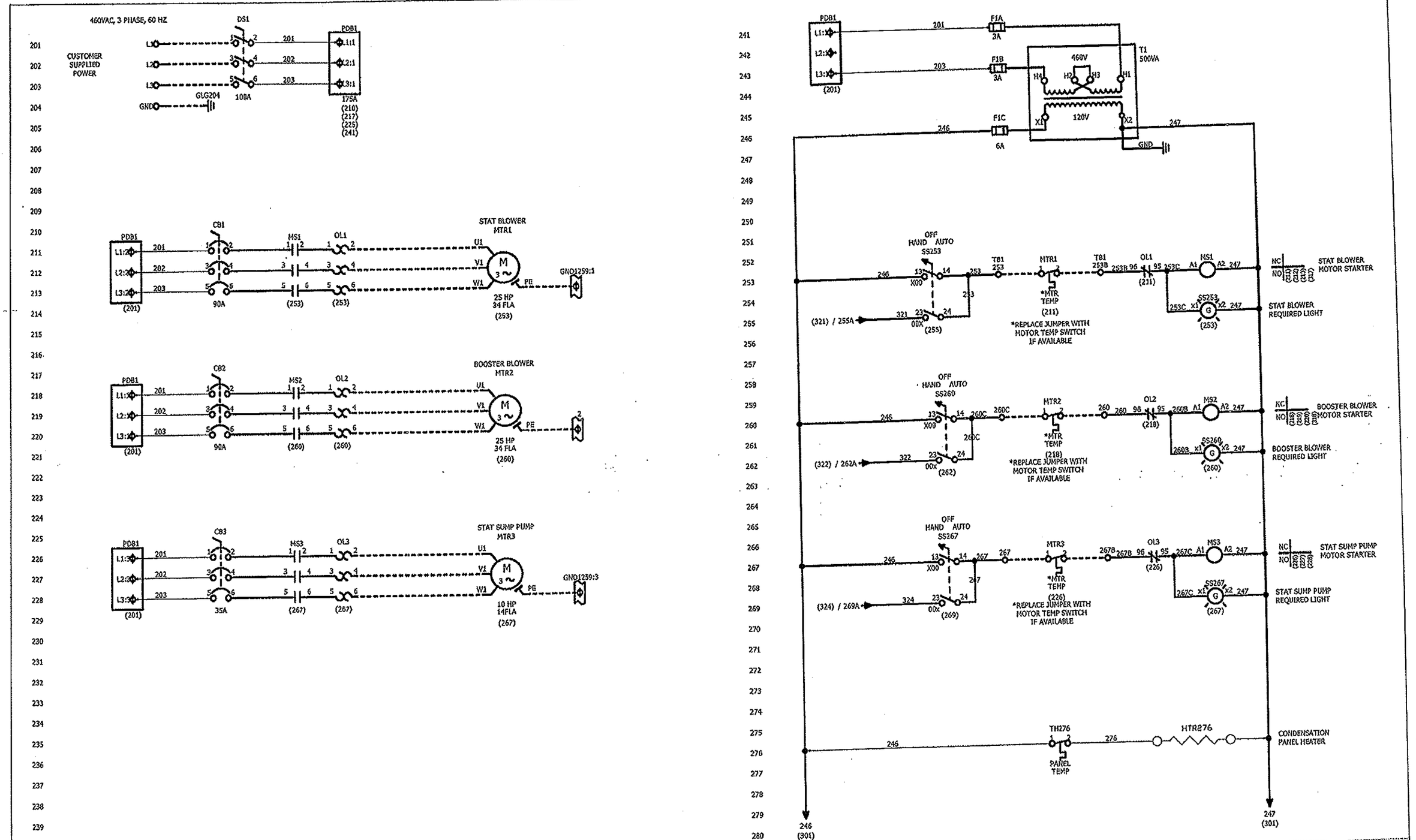

CARBONAIR	PROJECT DESCRIPTION ASTATULA REFUELING	SALES ORDER NUMBER CUSTOMER CARBONAIR	THIS DOCUMENT IS THE COPYRIGHTED PROPERTY OF DRC, INC. AND MAY NOT BE REPRODUCED WITHOUT DRC WRITTEN PERMISSION OR USED FOR OTHER THAN DRC AUTHORIZED PURPOSES.	PAGE DESCRIPTION ELECTRICAL SCHEMATIC	PAGE NUMBER 2 TOTAL NO. OF PAGES 5 PREVIOUS PAGE 1 NEXT PAGE 3 REVISION A

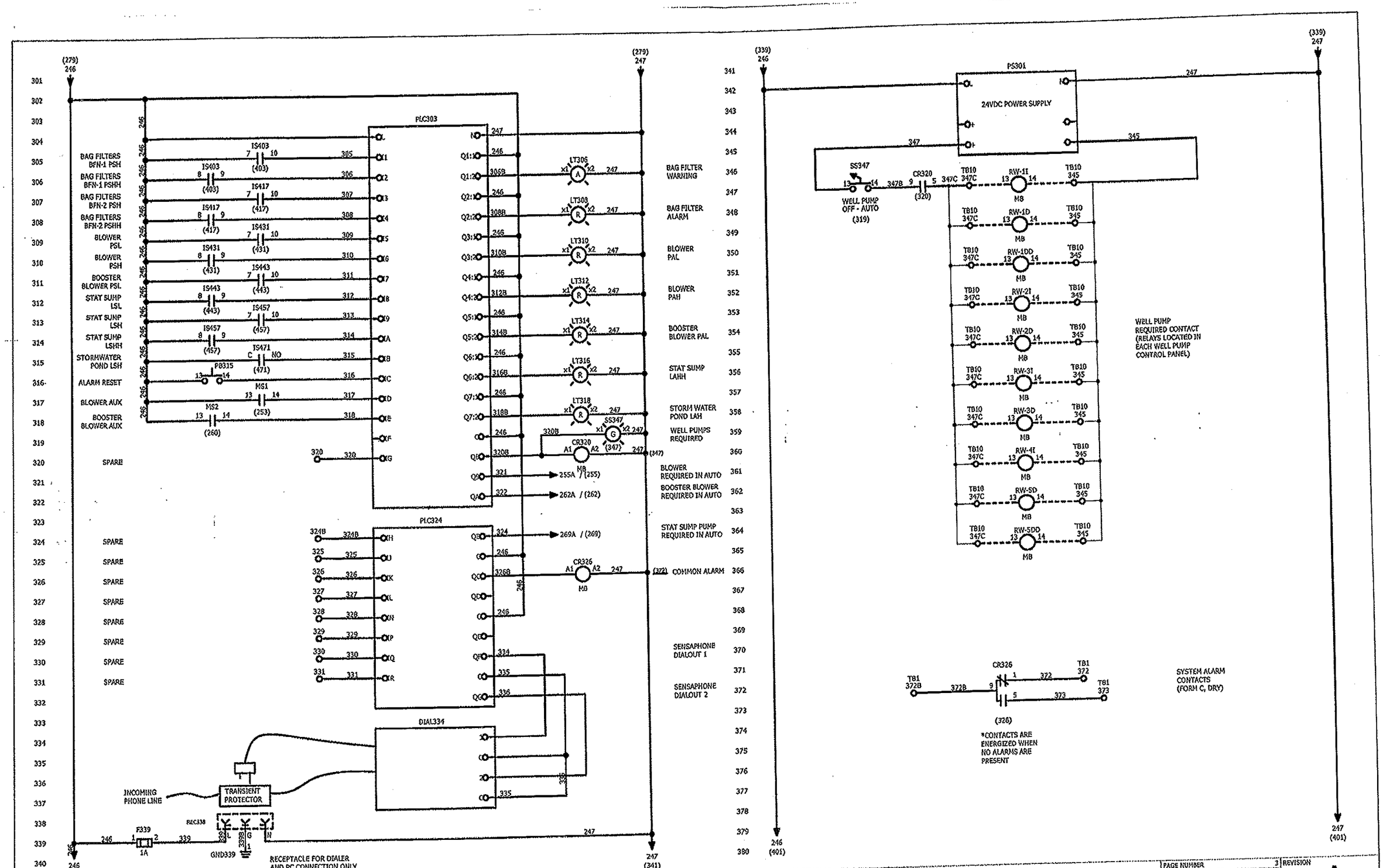

CARBONAIR	PROJECT DESCRIPTION ASTATULA REFUELING	SALES ORDER NUMBER CUSTOMER CARBONAIR	THIS DOCUMENT IS THE COPYRIGHTED PROPERTY OF DRC, INC. AND MAY NOT BE REPRODUCED WITHOUT DRC WRITTEN PERMISSION OR USED FOR OTHER THAN DRC AUTHORIZED PURPOSES.	PAGE DESCRIPTION ELECTRICAL SCHEMATIC	PAGE NUMBER 3 TOTAL NO. OF PAGES 5 PREVIOUS PAGE 2 NEXT PAGE 4 REVISION A

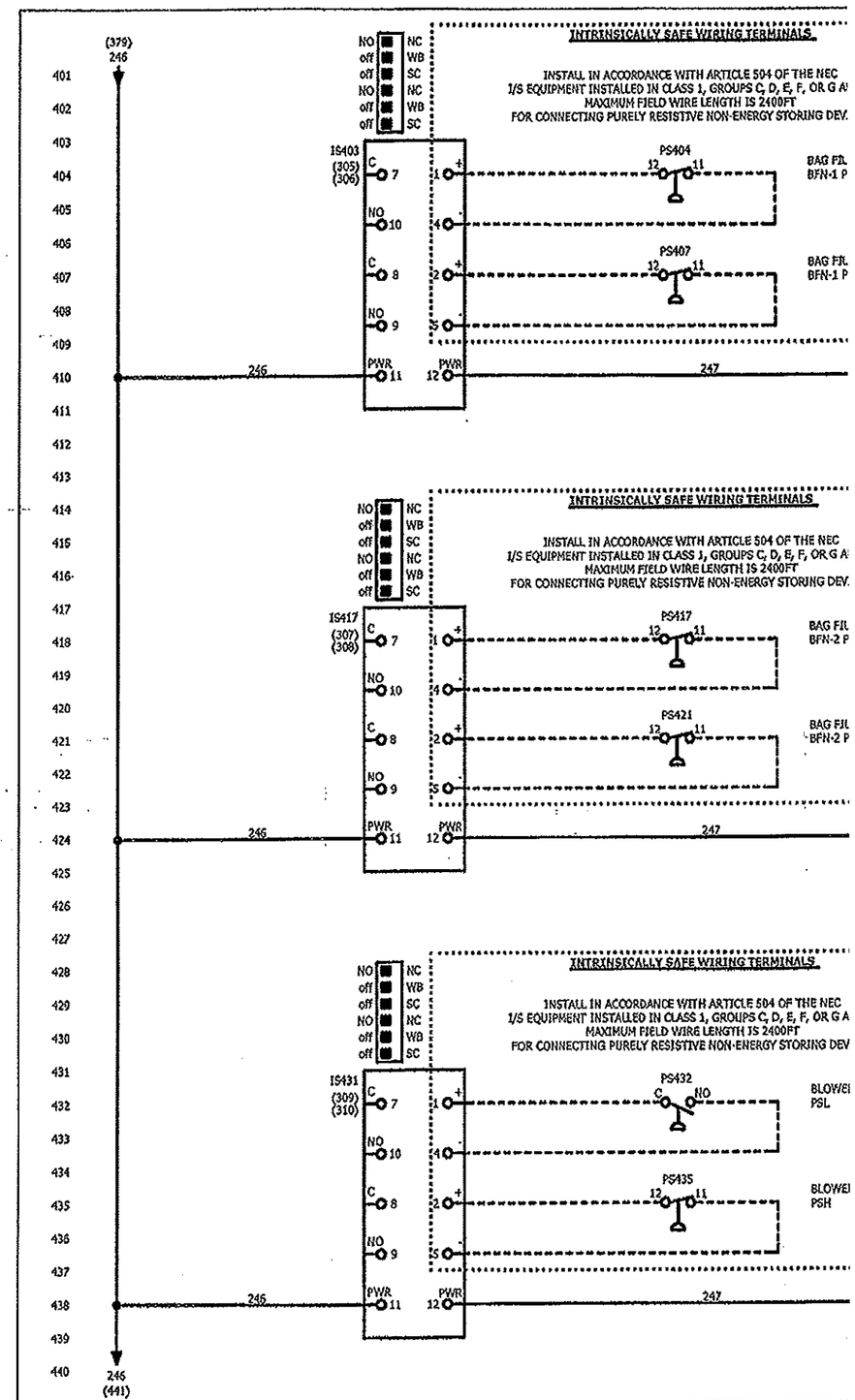
(379)
246
401
402
403
404
405
406
407
408
409
410
411
412
413
414
415
416
417
418
419
420
421
422
423
424
425
426
427
428
429
430
431
432
433
434
435
436
437
438
439
440
246
(441)
NO NC
off WB
off SC
NO NC
off WB
off SC
INTRINSICALLY SAFE WIRING TERMINALS
INSTALL IN ACCORDANCE WITH ARTICLE 504 OF THE NEC
I/S EQUIPMENT INSTALLED IN CLASS 1, GROUPS C, D, E, F, OR G A
MAXIMUM FIELD WIRE LENGTH IS 2400FT
FOR CONNECTING PURELY RESISTIVE NON-ENERGY STORING DEV.
IS403
(305)
(306)
C 7
NO 10
C 8
NO 9
PWR 11
PWR 12
1 +
4 -
2 +
5 -
PS404
12 11
BAG FIL
BFN-1 P
PS407
12 11
BAG FIL
BFN-1 P
246
247
INTRINSICALLY SAFE WIRING TERMINALS
INSTALL IN ACCORDANCE WITH ARTICLE 504 OF THE NEC
I/S EQUIPMENT INSTALLED IN CLASS 1, GROUPS C, D, E, F, OR G A
MAXIMUM FIELD WIRE LENGTH IS 2400FT
FOR CONNECTING PURELY RESISTIVE NON-ENERGY STORING DEV.
IS417
(307)
(308)
PS417
12 11
BAG FIL
BFN-2 P
PS421
12 11
BAG FIL
BFN-2 P
246
247
INTRINSICALLY SAFE WIRING TERMINALS
INSTALL IN ACCORDANCE WITH ARTICLE 504 OF THE NEC
I/S EQUIPMENT INSTALLED IN CLASS 1, GROUPS C, D, E, F, OR G A
MAXIMUM FIELD WIRE LENGTH IS 2400FT
FOR CONNECTING PURELY RESISTIVE NON-ENERGY STORING DEV
IS431
(309)
(310)
PS432
C NO
BLOWEI
PSL
PS435
12 11
BLOWEI
PSH
246
247
CARBONAIR
PROJECT DESCRIPTION
ASTATULA REFUELING
SALES ORDER NUMBER
CUSTOMER
CARBONAI

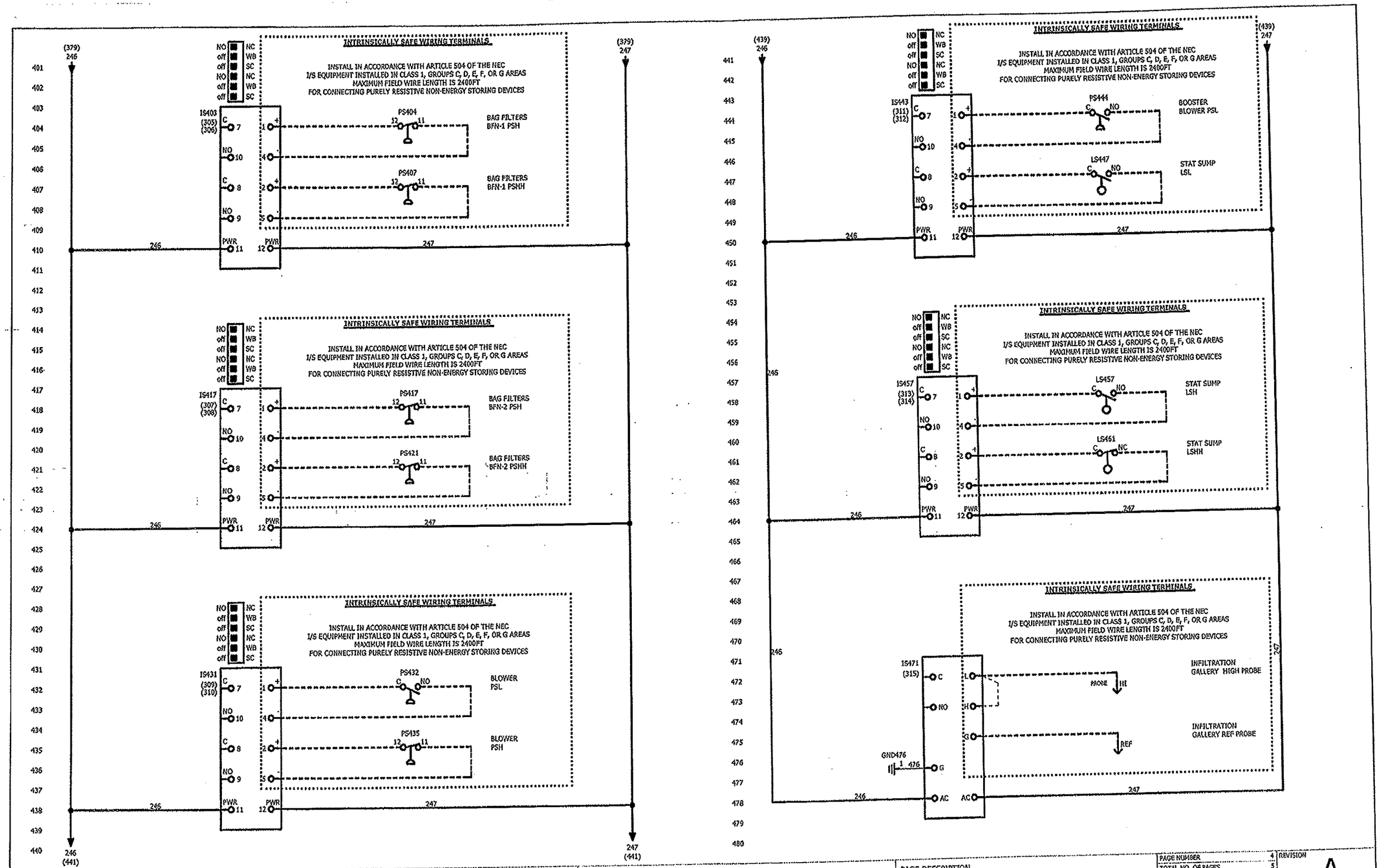

CARBONAIR	PROJECT DESCRIPTION ASTATULA REFUELING	SALES ORDER NUMBER CUSTOMER CARBONAIR	THIS DOCUMENT IS THE COPYRIGHTED PROPERTY OF DRC, INC. AND MAY NOT BE REPRODUCED WITHOUT DRC WRITTEN PERMISSION OR USED FOR OTHER THAN DRC AUTHORIZED PURPOSES.	PAGE DESCRIPTION ELECTRICAL SCHEMATIC	PAGE NUMBER 4 TOTAL NO. OF PAGES 5 PREVIOUS PAGE 3 NEXT PAGE 5

REVISION A

INNER DOOR NAMEPLATE SCHEDULE

DEVICE ID	LEGEND PLATE
DS1	MAIN DISCONNECT SWITCH
LT306	BAG FILTERS PRESSURE WARNING
LT308	BAG FILTERS HIGH PRESSURE
LT310	STAT BLOWER LOW PRESSURE
LT312	STAT BLOWER HIGH PRESSURE
LT314	BOOSTER BLOWER LOW PRESSURE
LT316	STAT SUMP HIGH LEVEL
LT318	INFILTRATION GALLERY HIGH LEVEL
SS253	STAT BLOWER HAND-OFF-AUTO
SS260	BOOSTER BLOWER HAND-OFF-AUTO
SS267	STAT SUMP PUMP HAND-OFF-AUTO
SS347	WELL PUMPS OFF - AUTO
PB315	ALARM RESET
DIAL334	SYSTEM DIALER

INNER DOOR LAYOUT

36" HIGH X 30" WIDE

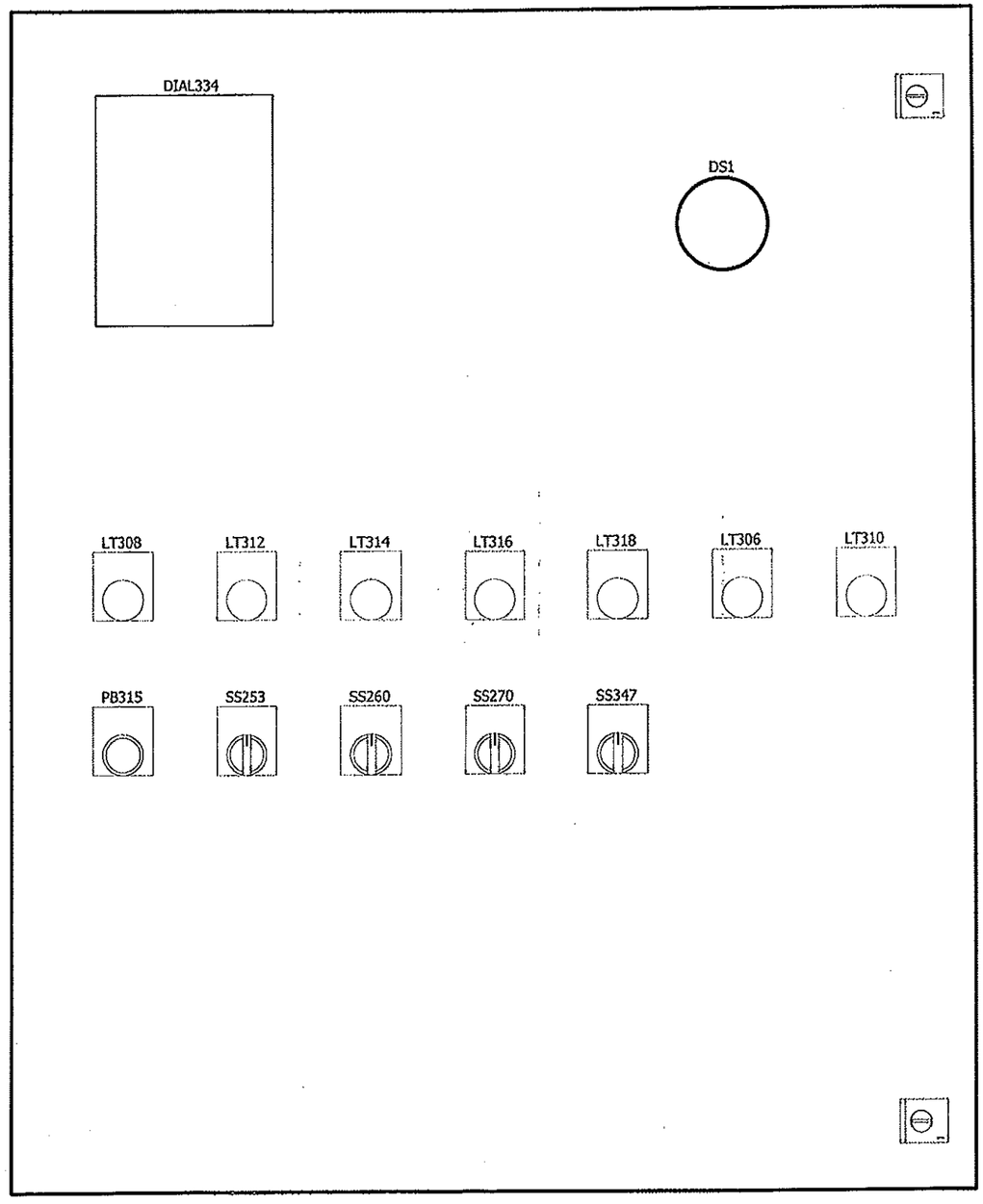

PROJECT DESCRIPTION ASTATULA REFUELING	SALES ORDER NUMBER CUSTOMER CARBONAIR	THIS DOCUMENT IS THE COPYRIGHTED PROPERTY OF DRC, INC. AND MAY NOT BE REPRODUCED WITHOUT DRC WRITTEN PERMISSION OR USED FOR OTHER THAN DRC AUTHORIZED PURPOSES.	PAGE DESCRIPTION INNER DOOR LAYOUT	PAGE NUMBER 5 TOTAL NO. OF PAGES 5 PREVIOUS PAGE 4 NEXT PAGE	REVISION A

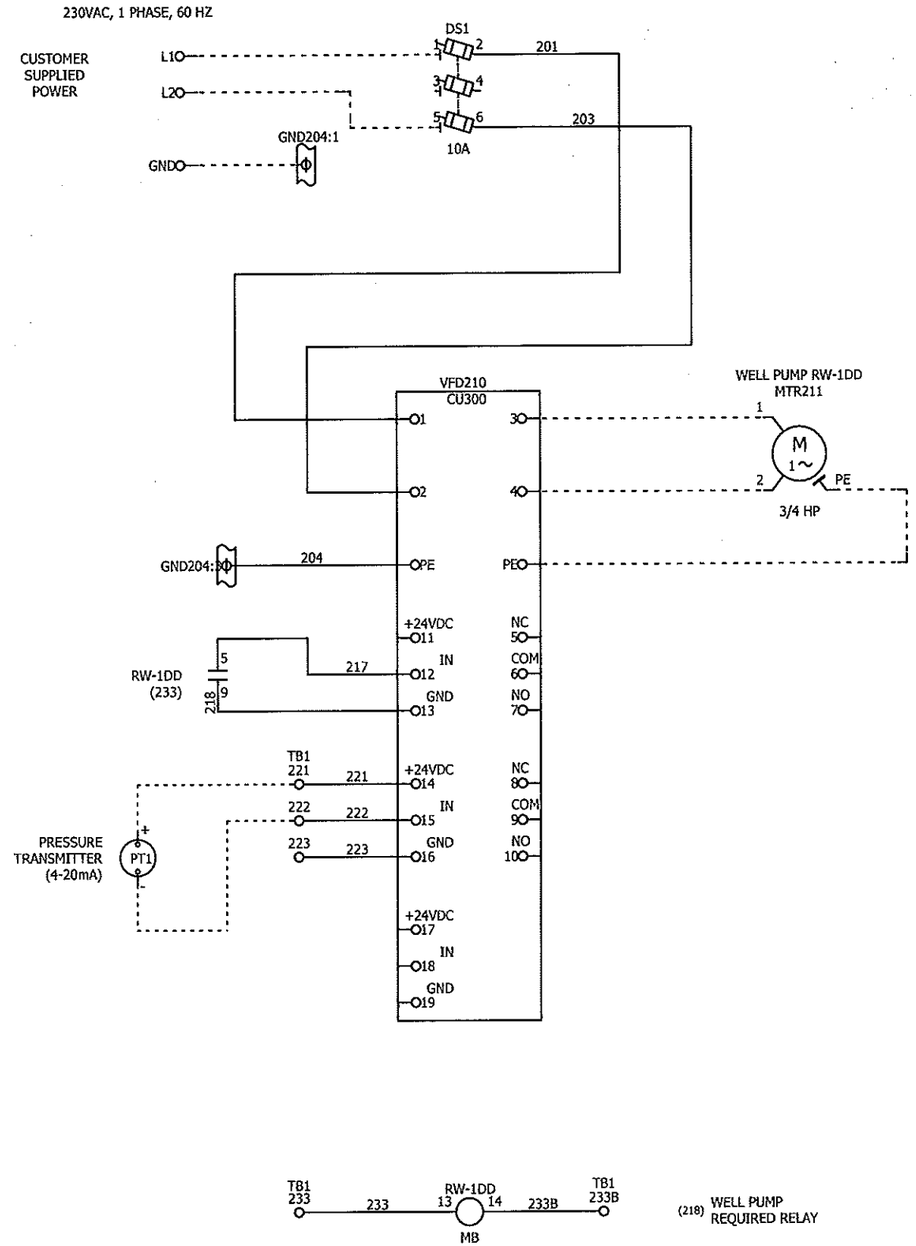

AS-BUILT

PROJECT DESCRIPTION ASTATULA WELL PUMP	SALES ORDER NUMBER CUSTOMER CARBONAIR	THIS DOCUMENT IS THE COPYRIGHTED PROPERTY OF DRC, INC. AND MAY NOT BE REPRODUCED WITHOUT DRC WRITTEN PERMISSION OR USED FOR OTHER THAN DRC AUTHORIZED PURPOSES.	PAGE DESCRIPTION ELECTRICAL SCHEMATIC

PAGE NUMBER	2	REVISION
TOTAL NO. OF PAGES	2	
PREVIOUS PAGE	1	
NEXT PAGE		

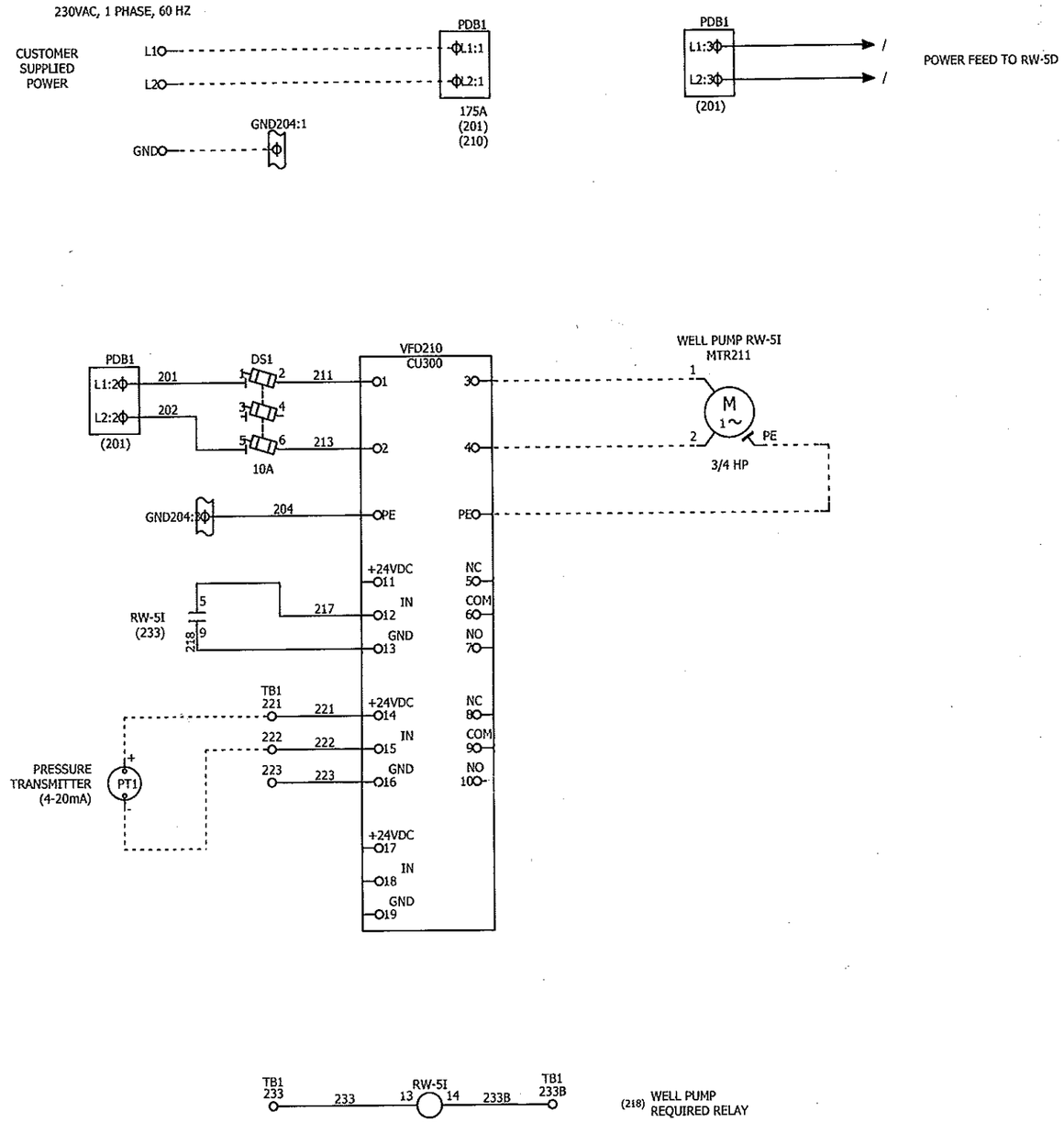

AS-BUILT

PROJECT DESCRIPTION ASTATULA WELL PUMP	SALES ORDER NUMBER CUSTOMER CARBONAIR	THIS DOCUMENT IS THE COPYRIGHTED PROPERTY OF DRC, INC. AND MAY NOT BE REPRODUCED WITHOUT DRC WRITTEN PERMISSION OR USED FOR OTHER THAN DRC AUTHORIZED PURPOSES.	PAGE DESCRIPTION ELECTRICAL SCHEMATIC	PAGE NUMBER 2 TOTAL NO. OF PAGES 2 PREVIOUS PAGE 1 NEXT PAGE	REVISION

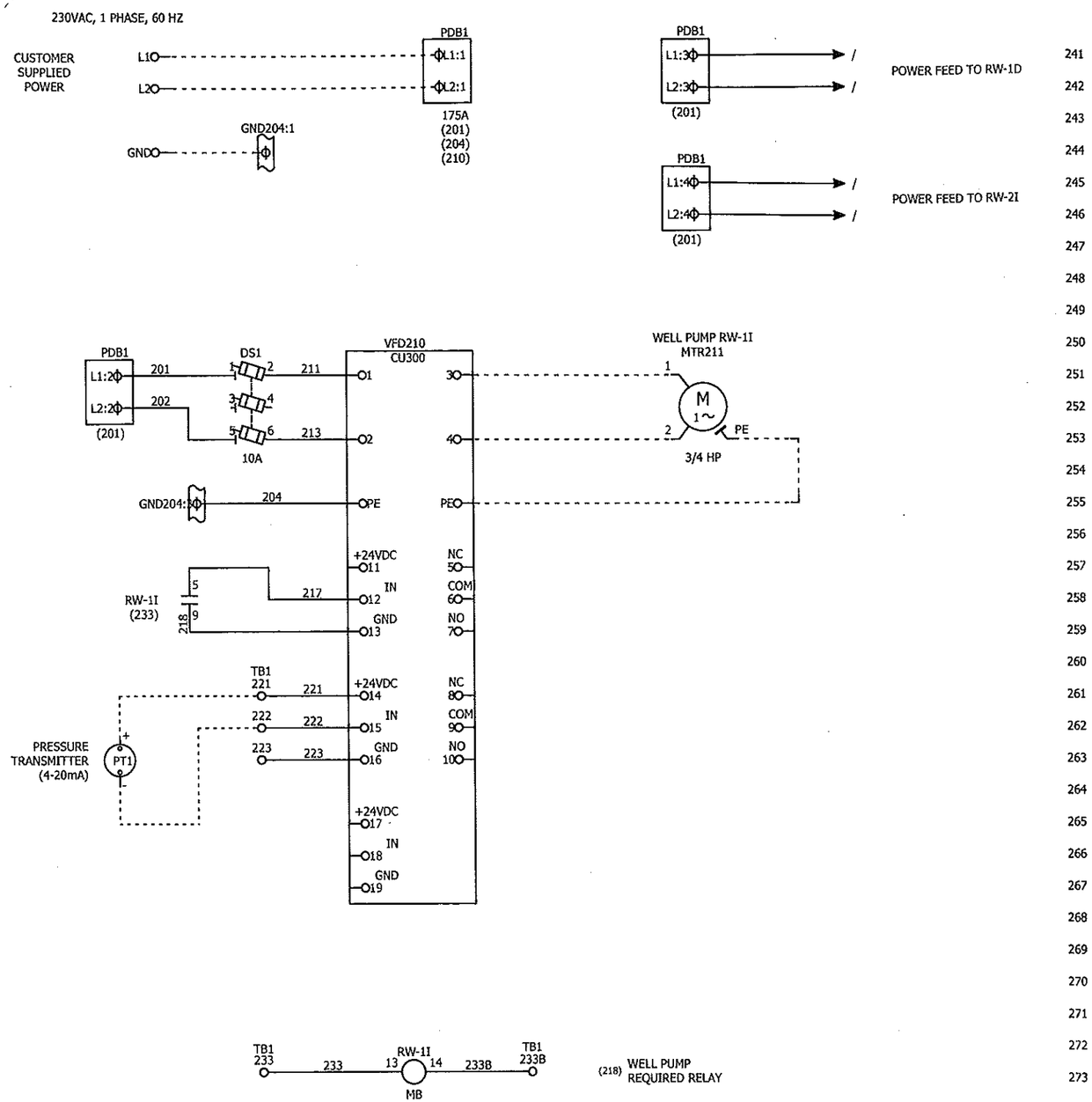

AS-BUILT

PROJECT DESCRIPTION ASTATULA WELL PUMP	SALES ORDER NUMBER CUSTOMER CARBONAIR	THIS DOCUMENT IS THE COPYRIGHTED PROPERTY OF DRC, INC. AND MAY NOT BE REPRODUCED WITHOUT DRC WRITTEN PERMISSION OR USED FOR OTHER THAN DRC AUTHORIZED PURPOSES.	PAGE DESCRIPTION ELECTRICAL SCHEMATIC	PAGE NUMBER 2 TOTAL NO. OF PAGES 2 PREVIOUS PAGE 1 NEXT PAGE	REVISION

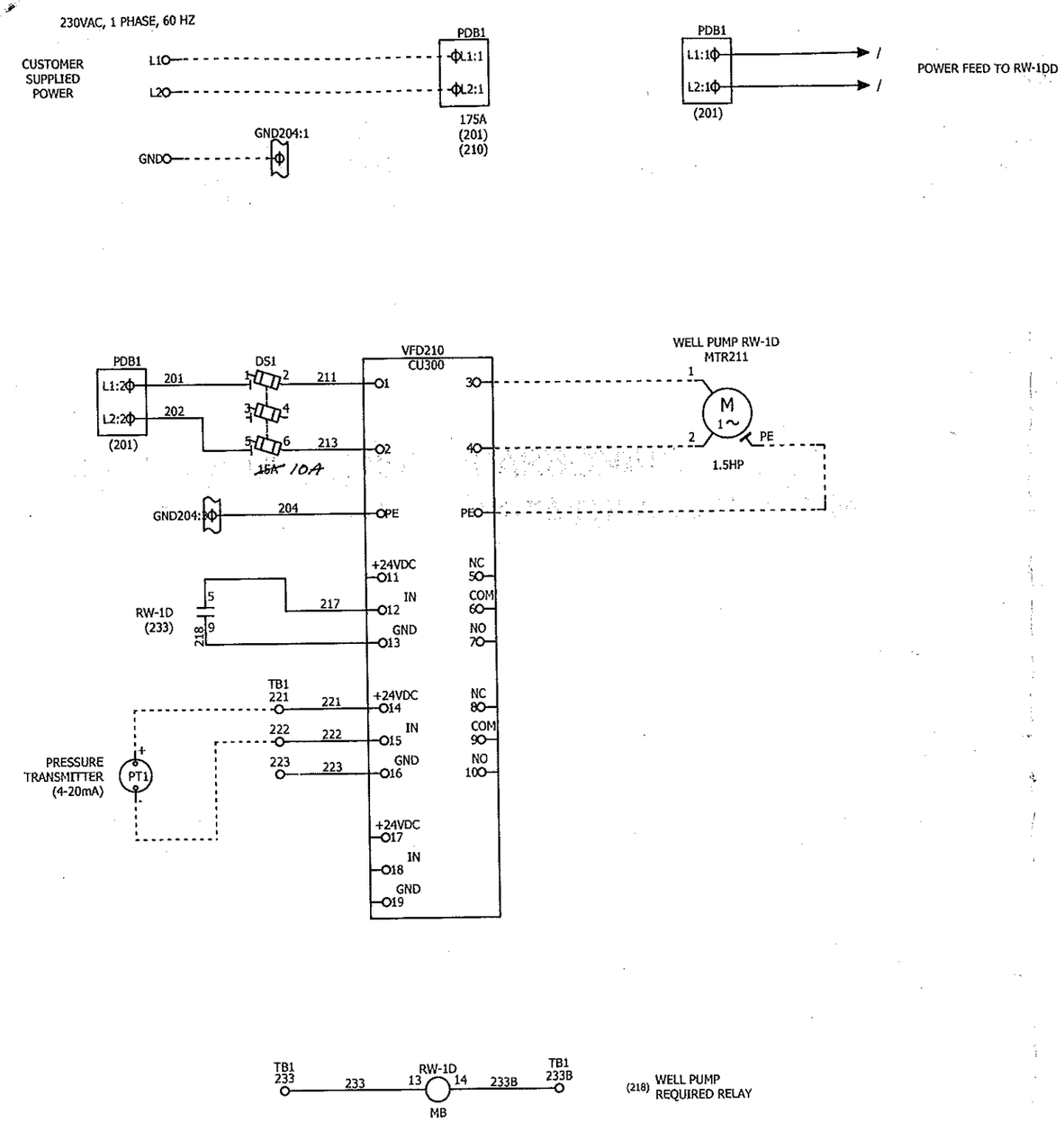

AS-BUILT

PROJECT DESCRIPTION ASTATULA WELL PUMP	SALES ORDER NUMBER CUSTOMER CARBONAIR	THIS DOCUMENT IS THE COPYRIGHTED PROPERTY OF DRC, INC. AND MAY NOT BE REPRODUCED WITHOUT DRC WRITTEN PERMISSION OR USED FOR OTHER THAN DRC AUTHORIZED PURPOSES.	PAGE DESCRIPTION ELECTRICAL SCHEMATIC	PAGE NUMBER 2 TOTAL NO. OF PAGES 2 PREVIOUS PAGE 1 NEXT PAGE REVISION