CONSTRUCTION DRAWINGS

FOR

PHASE II REMEDIAL SYSTEM
LAKE COUNTY ASTATULA REFUELING FACILITY
FDEP FACILITY No. 358622951
13130 LANDFILL ROAD
ASTATULA, LAKE COUNTY, FLORIDA

811 Know what's below. Call before you dig.

sunshine state ONE CALL of florida

COLOR CODE
FOR MARKING
UNDERGROUND UTILITY LINES

- **WHITE** - Proposed excavation
- **PINK** - Temporary survey markings
- **RED** - Electric power lines, cables, conduit and lighting cables
- **YELLOW** - Gas, oil, steam, petroleum or gaseous materials
- **ORANGE** - Communication, alarm or signal lines, cables or conduit
- **BLUE** - Potable water
- **PURPLE** - Reclaimed water, irrigation and slurry lines
- **GREEN** - Sewers and drain lines

sunshine state ONE CALL of florida

Always call 811 before you dig.
www.callsunshine.com

CB&I PROJECT NO. 153309

FEBRUARY 25, 2015

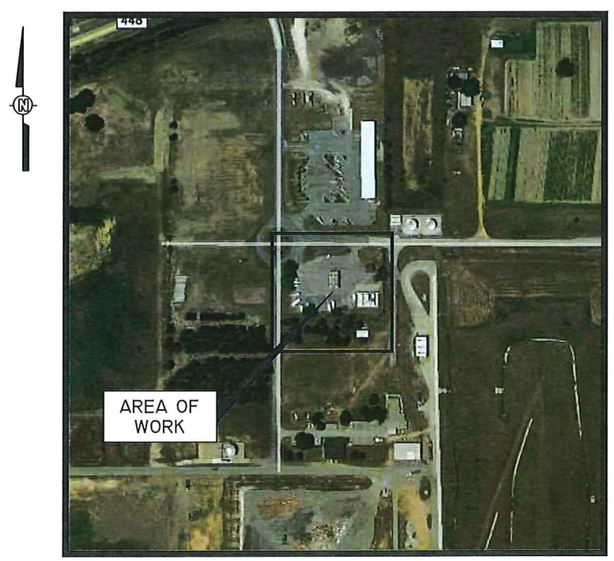

SITE MAP

SHEET INDEX	
DRAWING No.	TITLE
C-1	PHASE II REMEDIAL SYSTEM LAYOUT
C-2	TRENCH SECTIONS
C-3	DPE AND GROUNDWATER RECOVERY WELL DETAILS
C-4	DPE AND GROUNDWATER RECOVERY WELL DETAILS
C-5	SURFACE COVER AND CONCRETE SLAB DETAILS
C-6	REMEDIAL EQUIPMENT LAYOUT DETAILS
P-1	PROCESS AND INSTRUMENTATION DIAGRAM LEGEND
P-2	PROCESS AND INSTRUMENTATION DIAGRAM
P-3	PROCESS AND INSTRUMENTATION DIAGRAM

CB&I ENVIRONMENTAL & INFRASTRUCTURE, INC.
1228 WINTER GARDEN VINELAND ROAD
WINTER GARDEN, FLORIDA 34787
(407) 287-3200

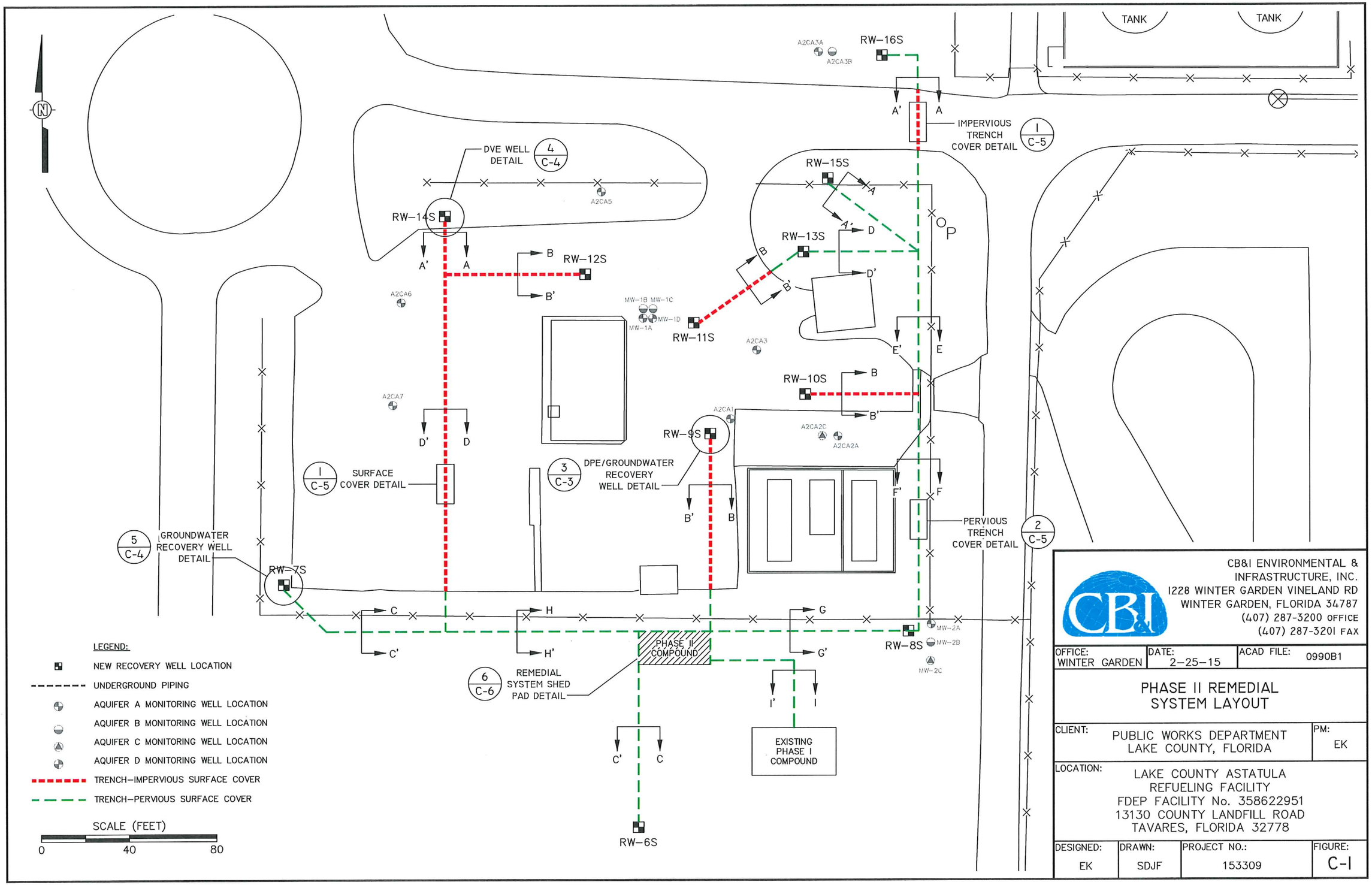

CB&I ENVIRONMENTAL & INFRASTRUCTURE, INC.
1228 WINTER GARDEN VINELAND RD
WINTER GARDEN, FLORIDA 34787
(407) 287-3200 OFFICE
(407) 287-3201 FAX

OFFICE:	DATE:	ACAD FILE:
WINTER GARDEN	2-25-15	0990B1

PHASE II REMEDIAL SYSTEM LAYOUT

CLIENT:	PM:
PUBLIC WORKS DEPARTMENT LAKE COUNTY, FLORIDA	EK

LOCATION:
LAKE COUNTY ASTATULA
REFUELING FACILITY
FDEP FACILITY No. 358622951
13130 COUNTY LANDFILL ROAD
TAVARES, FLORIDA 32778

DESIGNED:	DRAWN:	PROJECT NO.:	FIGURE:
EK	SDJF	153309	C-1

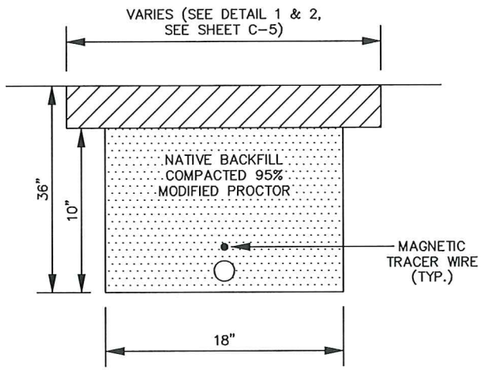

(1) 2" DIA. SCH 40 PVC DUAL PHASE PIPE

SECTION A-A'

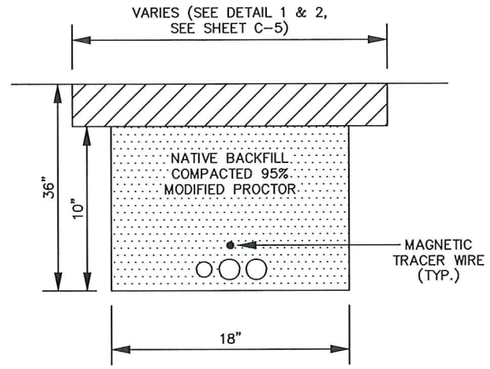

(1) 2" DIA. SCH 40 PVC RECOVERY PIPE
(1) 2" DIA. SCH 40 PVC DUAL PHASE PIPE
(1) 1" DIA. SCH 40 CONDUIT ELECTRICAL SUPPLY

SECTION B-B'

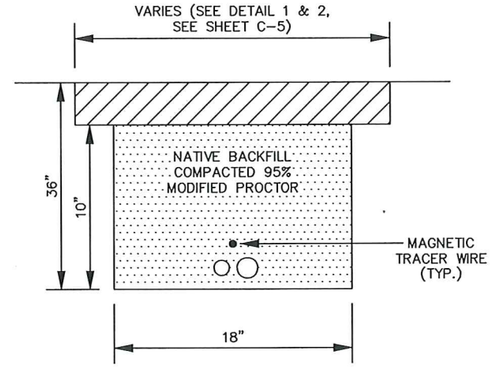

(1) 2" DIA. SCH 40 PVC RECOVERY PIPE
(1) 1" DIA. SCH 40 CONDUIT ELECTRICAL SUPPLY

SECTION C-C'

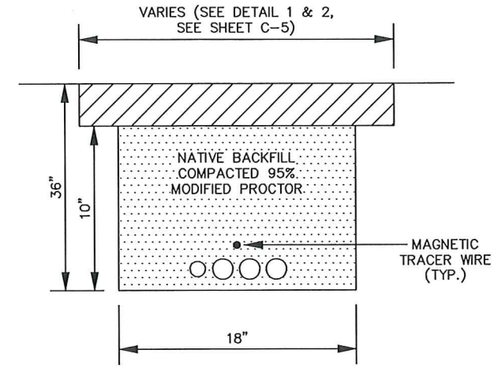

(1) 2" DIA. SCH 40 PVC RECOVERY PIPE
(2) 2" DIA. SCH 40 PVC DUAL PHASE PIPES
(1) 1" DIA. SCH 40 CONDUIT ELECTRICAL SUPPLY

SECTION D-D'

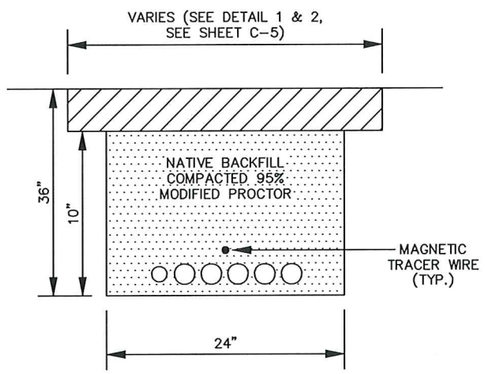

(1) 2" DIA. SCH 40 PVC RECOVERY PIPE
(4) 2" DIA. SCH 40 PVC DUAL PHASE PIPES
(1) 1" DIA. SCH 40 CONDUIT ELECTRICAL SUPPLY

SECTION E-E'

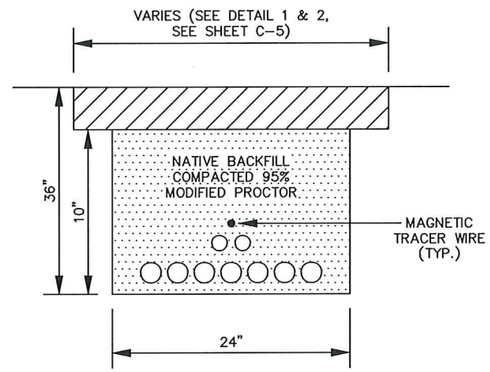

(2) 2" DIA. SCH 40 PVC RECOVERY PIPES
(5) 2" DIA. SCH 40 PVC DUAL PHASE PIPES
(2) 1" DIA. SCH 40 CONDUIT ELECTRICAL SUPPLY

SECTION F-F'

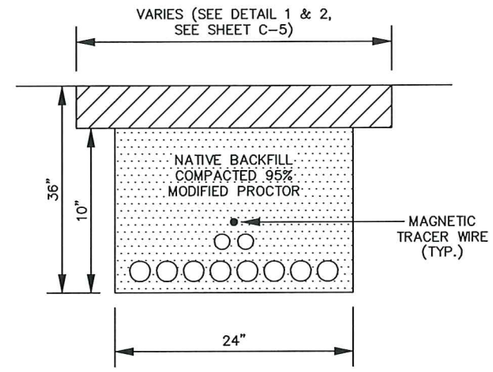

(2) 2" DIA. SCH 40 PVC RECOVERY PIPES
(6) 2" DIA. SCH 40 PVC DUAL PHASE PIPES
(2) 1" DIA. SCH 40 CONDUIT ELECTRICAL SUPPLY

SECTION G-G'

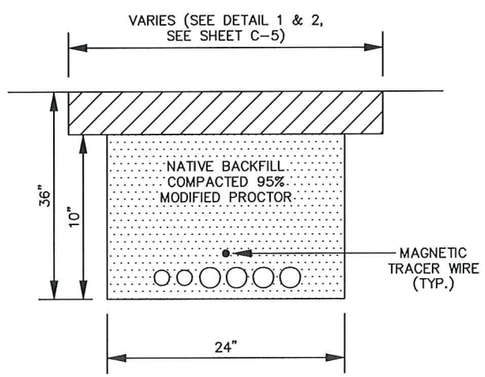

(2) 2" DIA. SCH 40 PVC RECOVERY PIPES
(2) 2" DIA. SCH 40 PVC DUAL PHASE PIPES
(2) 1" DIA. SCH 40 CONDUIT ELECTRICAL SUPPLY

SECTION H-H'

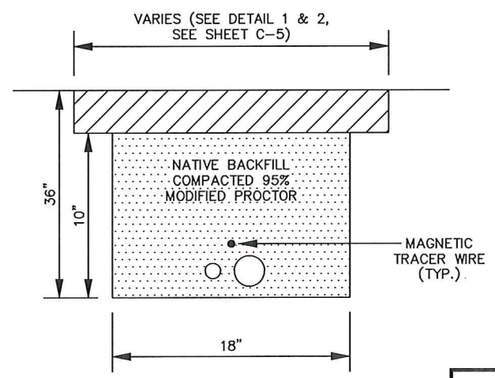

(1) 4" DIA. SCH 40 WATER CONVEYANCE (TO AIR STRIPPER)
(1) 1" DIA. CONTROL PIPE

SECTION I-I'

NOTES:

1. TRENCH DEPTH IS MINIMUM VALUES.
2. TRENCH SURFACE COVER TO MATCH EXISTING IMPERVIOUS/PERVIOUS CONDITION AS DEPICTED ON SHEET C-1. TRENCH SURFACE COVER DETAIL PROVIDED ON SHEET C-5.
3. CONTRACTOR SHALL ARRANGE PIPE ALIGNMENT TO ALLOW GREATEST COVER DEPTH. NO CROSS OVER PIPE ALLOWED.
4. PIPE TRACER WIRE SHALL BE A MINIMUM 12 AWG SOLID UL/UF AND BE PLACED ALONG TOP OF THE CENTER PIPE WITHIN TRENCH. SPLICE TRACER WIRE IN ACCORDANCE WITH MANUFACTURERS RECOMMENDATIONS.
5. CONTRACTOR SHALL PROVIDE WRITTEN GUIDANCE FROM PIPE MANUFACTURER ON HOW TO SECURELY CONNECT PIPE SECTIONS TOGETHER.
6. CONTRACTOR IS ENCOURAGED TO ALSO SUBSTITUTE HDPE PIPE SDR 11 (PE 4710 OR EQUAL) IN LIEU OF PVC SCHEDULE 40 FOR ALL PIPING IN TRENCH. IF HDPE PIPING IS USED THEN IT SHOULD BE CONTINUOUS WITH NO BREAKS/FUSED JOINTS FROM WELL VAULT TO COMPOUND.
7. CONTRACTOR SHALL PRESSURE TEST ALL PIPING RUNS FROM WELL VAULT TO COMPOUND. PRESSURE TEST SHALL BE HYDRSTATIC FOR ONE HOUR DURATION AT 60 PSI. CONTRACTOR SHALL PROVIDE TESTING PROTOCOL TO OWNERS ENGINEER AT LEAST TWO DAYS IN ADVANCE OF PIPE PRESSURE TEST.

CB&I ENVIRONMENTAL & INFRASTRUCTURE, INC.
1228 WINTER GARDEN VINELAND ROAD
WINTER GARDEN, FLORIDA 34787
(407) 287-3200 OFFICE
(407) 287-3201 FAX

OFFICE: WINTER GARDEN	DATE: 2-25-15	ACAD FILE: 3309B3	
TRENCH SECTIONS			
CLIENT: PUBLIC WORKS DEPARTMENT LAKE COUNTY, FLORIDA			PM: EK
LOCATION: LAKE COUNTY ASTATULA REFUELING FACILITY FDEP FACILITY No. 358622951 13130 COUNTY LANDFILL ROAD TAVARES, FLORIDA 32778			
DESIGNED: EK	DRAWN: SDJF	PROJECT NO.: 153309	FIGURE: C-2

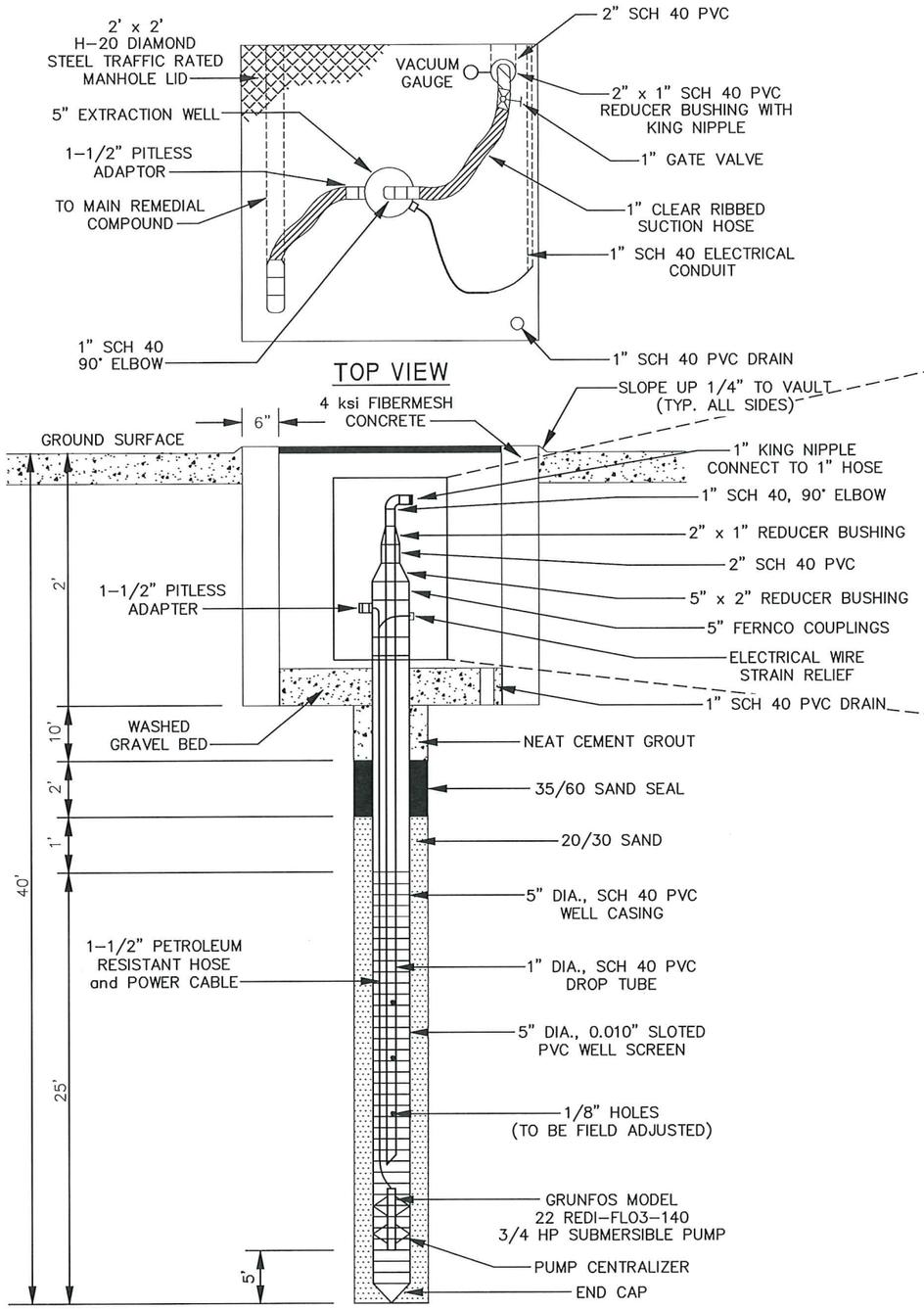

DPE/GROUNDWATER RECOVERY WELL DETAIL (3 / C-1)
(RW-9S, RW-10S, RW-11S, RW-12S)
NOT TO SCALE

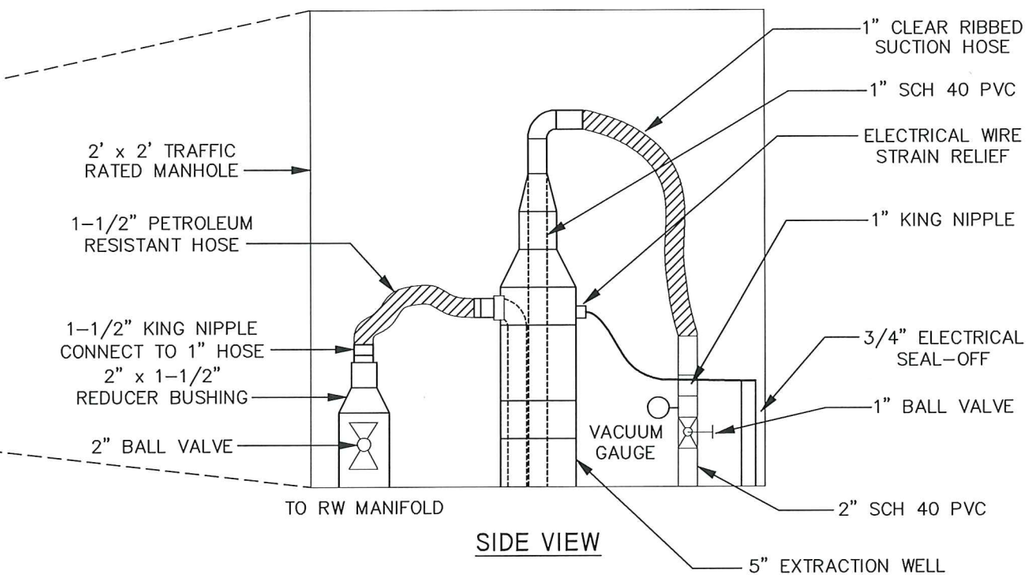

SIDE VIEW

NOTES:

1. CONTRACTOR SHALL ARRANGE HOSES, WIRES, VALVES, GAUGES IN A NEAT ARRANGEMENT.
2. GAUGE FACE SHALL BE EASILY READ FROM A VIEW POINT ABOVE THE GAUGE.
3. VALVES SHALL BE EASILY ACUATED WITHOUT MOVING HOSES/WIRES.
4. CONTRACTOR SHALL VERIFY GRAVEL BED AND DRAIN PIPE ARE ADEQUATE TO KEEP WATER FROM ACCUMULATING IN VAULT.
5. CONTRACTOR SHALL PURCHASE CORROSION RESISTANT VAULT OR APPLY EPOXY BASE ANTICORROSION COATING.

CB&I ENVIRONMENTAL & INFRASTRUCTURE, INC.
1228 WINTER GARDEN VINELAND ROAD
WINTER GARDEN, FLORIDA 34787
(407) 287-3200 OFFICE
(407) 287-3201 FAX

OFFICE: WINTER GARDEN	DATE: 2-25-15	ACAD FILE: 3309B4	
DPE/GROUNDWATER RECOVERY WELL DETAILS			
CLIENT: PUBLIC WORKS DEPARTMENT LAKE COUNTY, FLORIDA			PM: EK
LOCATION: LAKE COUNTY ASTATULA REFUELING FACILITY FDEP FACILITY No. 358622951 13130 COUNTY LANDFILL ROAD TAVARES, FLORIDA 32778			
DESIGNED: EK	DRAWN: SDJF	PROJECT NO.: 153309	FIGURE: C-3

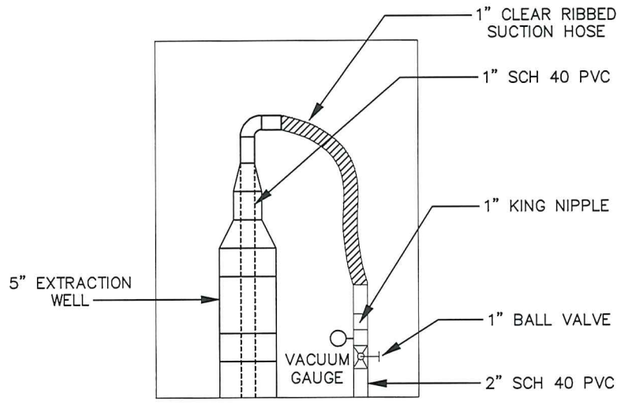

SIDE VIEW

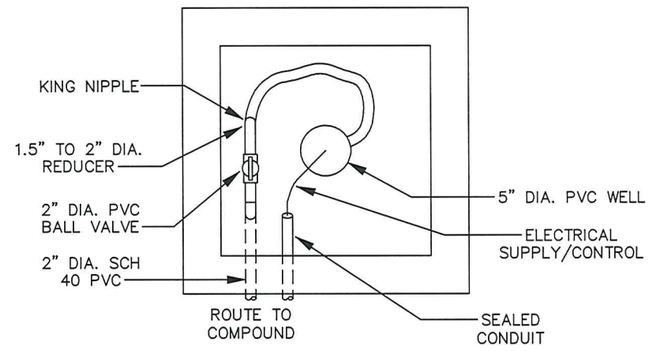

TOP VIEW

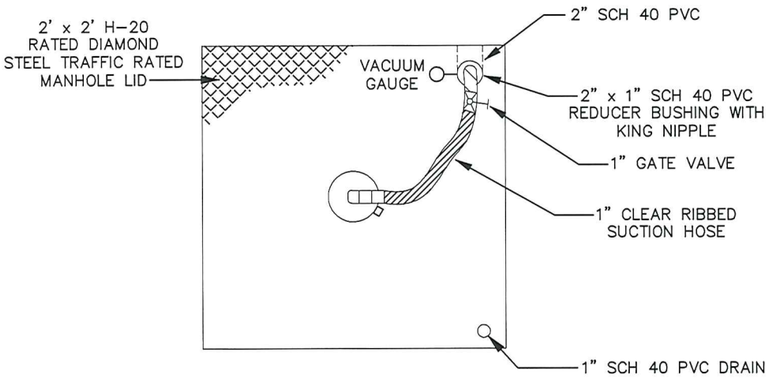

TOP VIEW

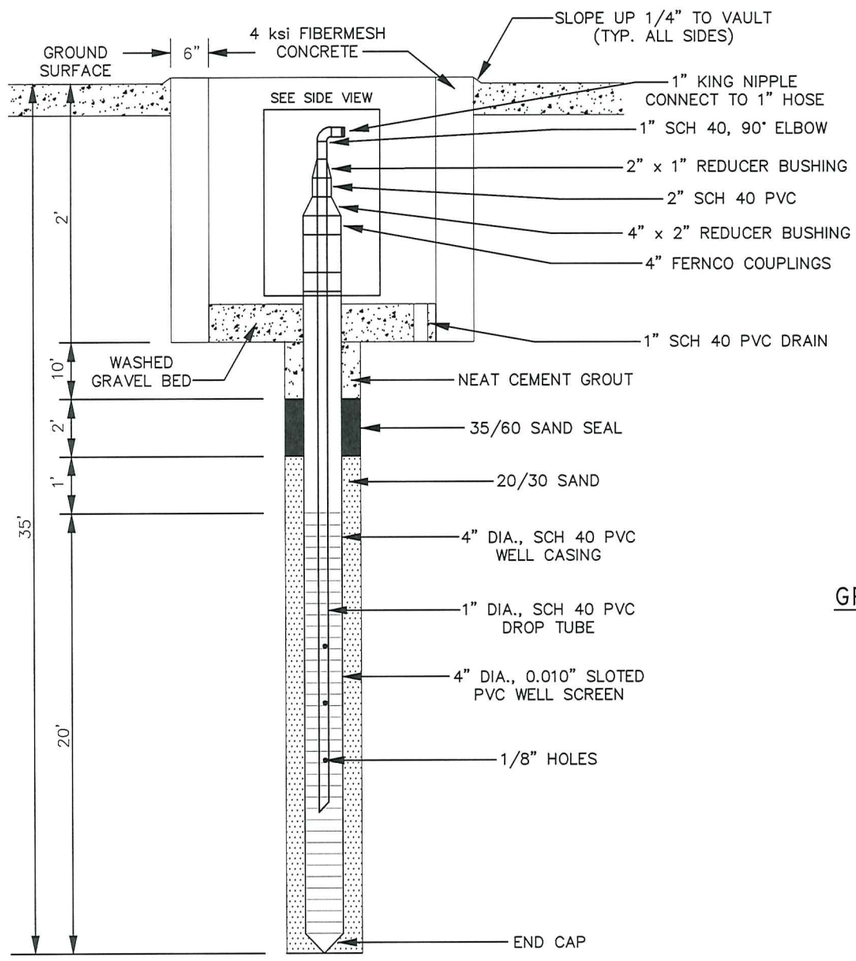

DPE WELL DETAIL
(RW-8S, RW-13S, RW-14S, RW-15S, RW-16S) 4 / C-1
NOT TO SCALE

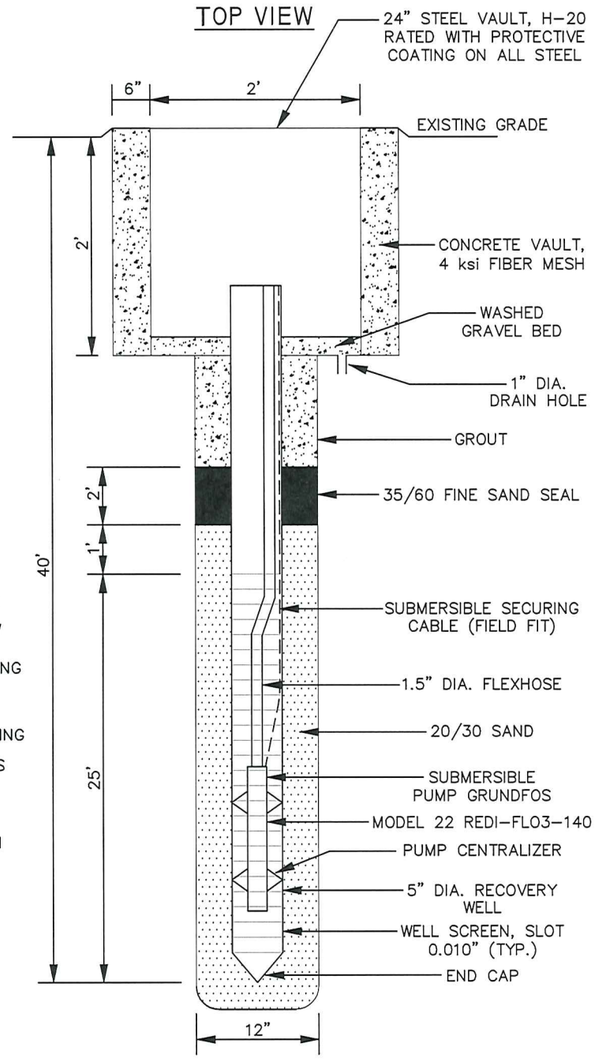

GROUNDWATER RECOVERY WELL DETAIL 5 / C-1
(RW-6S, RW-7S)
NOT TO SCALE

NOTE:

ALL PIPES and CONDUIT ROUTED UNDER VAULT WALLS.

OFFICE: WINTER GARDEN	DATE: 2-25-15	ACAD FILE: 3309B2	
DPE AND GROUNDWATER RECOVERY WELL DETAILS			
CLIENT: PUBLIC WORKS DEPARTMENT LAKE COUNTY, FLORIDA			PM: EK
LOCATION: LAKE COUNTY ASTATULA REFUELING FACILITY FDEP FACILITY No. 358622951 13130 COUNTY LANDFILL ROAD TAVARES, FLORIDA 32778			
DESIGNED: EK	DRAWN: SDJF	PROJECT NO.: 153309	FIGURE: C-4

CB&I ENVIRONMENTAL & INFRASTRUCTURE, INC.
1228 WINTER GARDEN VINELAND ROAD
WINTER GARDEN, FLORIDA 34787
(407) 287-3200 OFFICE
(407) 287-3201 FAX

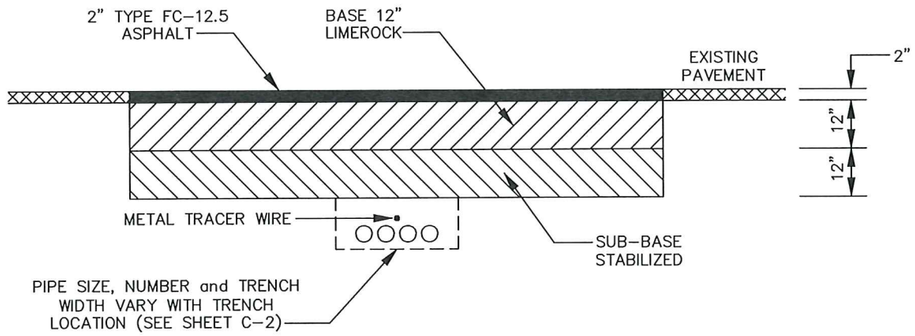

IMPERVIOUS TRENCH SECTION DETAIL (1 / C-1)

NOTES:

1. PLACE BASE IN 6" LIFTS, COMPACT EACH LIFT TO 98% PER AASHTO T-180, PRIMED AND SANDED.
2. COMPACT STABILIZED SUB-BASE TO MINIMUM LBR 40 AND 98% PER AASHTO T-180.
3. CONTRACTOR TO SAWCUT EXISTING PAVEMENT FOR INSTALLATION OF ALL PIPING. TYPICAL TRENCH SECTION TO VARY FROM 6' TO 8' DEPENDING ON CONDITIONS AND AS APPROVED BY OWNER'S ENGINEER.
4. COMPACTION TESTING FOR BASE AND SUB-BASE SHALL BE PERFORMED AT EACH TRENCH LEG AND/OR EVERY 100 FT OF TRENCHING.
5. CONTRACTOR SHALL SUBMIT COMPACTION BASELINE TEST RESULTS PRIOR TO EXCAVATION.
6. CONTRACTOR SHALL REWORK ANY BASE/SUB-BASE AREAS NOT MEETING COMPACTION SPECIFICATIONS UNTIL COMPACTION LEVEL ACHIEVED OR AS DIRECTED BY ENGINEER.

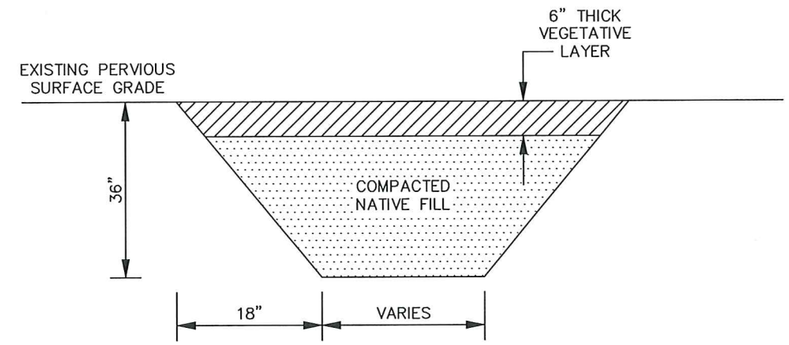

PERVIOUS TRENCH COVER DETAIL (2 / C-1)

NOTES:

1. COMPACT NATIVE BACKFILL SOIL IN 15" LIFT TO 95% ASTM D1557.
2. CONTRACTOR SHALL PROVIDE LABORATORY PROCTOR TEST RESULTS PRIOR TO COMMENCING TRENCH EXCAVATION.
3. TRENCH COMPACTION TESTING SHALL BE PERFORMED AT EACH TRENCH LEG AND/OR AT 100 FT INTERVAL.
4. VEGETATIVE LAYER SHALL CONTAIN SUFFICIENT ORGANICS TO SUPPORT ESTABLISHMENT OF GRASS.
5. ESTABLISHMENT OF GRASS COVER IN TRENCH AREA MAY BE BY SOD AND/OR HYDROSEED OR OTHER APPROVED METHOD. CONTRACTOR SHALL SUBMIT NOTICE OF SELECTED METHOD IN SUFFICIENT DETAIL TO EVALUATE THE TYPE OF GRASS, INSTALLATION METHOD AND ESTIMATED SURVIVAL RATE.

CB&I ENVIRONMENTAL & INFRASTRUCTURE, INC.
1228 WINTER GARDEN VINELAND ROAD
WINTER GARDEN, FLORIDA 34787
(407) 287-3200 OFFICE
(407) 287-3201 FAX

OFFICE: WINTER GARDEN	DATE: 2-25-15	ACAD FILE: 3309B8	
SURFACE COVER AND CONCRETE SLAB DETAILS			
CLIENT: PUBLIC WORKS DEPARTMENT LAKE COUNTY, FLORIDA		PM: EK	
LOCATION: LAKE COUNTY ASTATULA REFUELING FACILITY FDEP FACILITY No. 358622951 13130 COUNTY LANDFILL ROAD TAVARES, FLORIDA 32778			
DESIGNED: EK	DRAWN: SDJF	PROJECT NO.: 153309	FIGURE: C-5

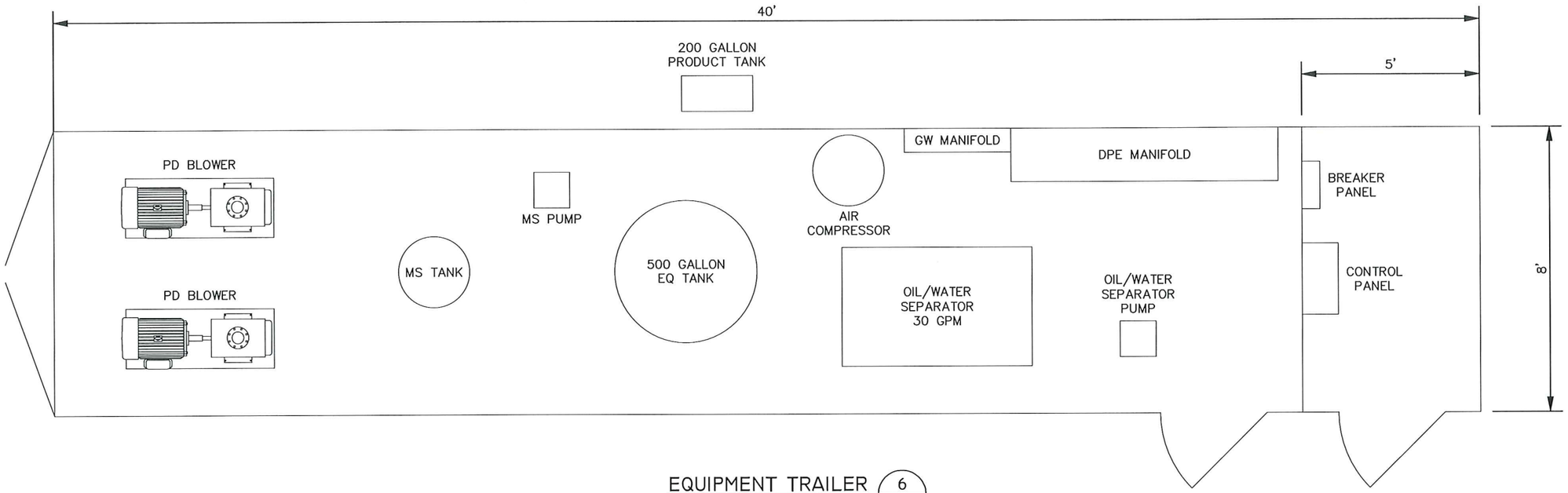

EQUIPMENT TRAILER (6 / C-1)

NOT TO SCALE

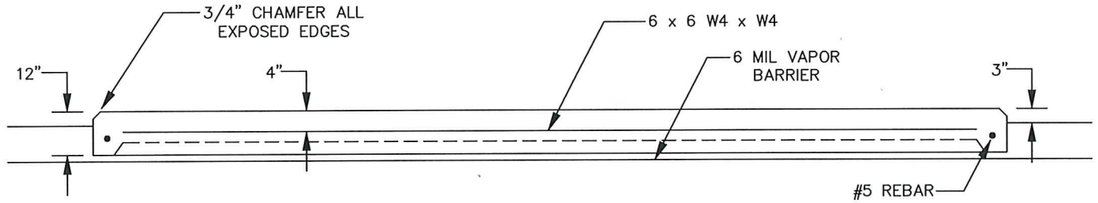

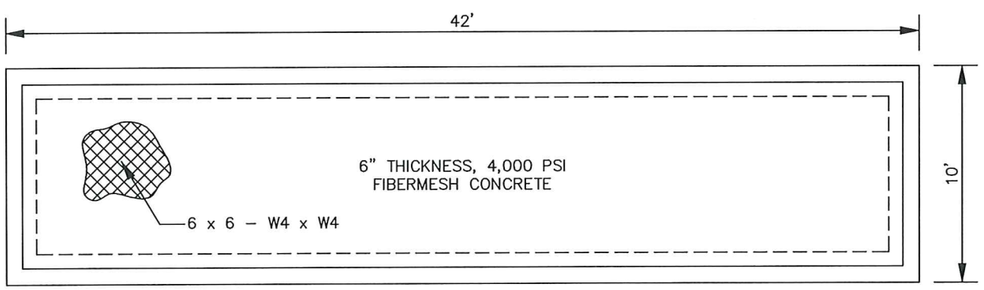

REMEDIAL SYSTEM SLAB DETAIL (6 / C-1)

NOTES:

1. CLEAR AND GRUB SLAB FOOTPRINT TO REMOVE ORGANIC MATTER. BACKFILL WITH CLEAN SOIL AS NECESSARY.
2. COMPACT SOIL BASE TO 98% MODIFIED PROCTOR ASTM D1557.
3. CONSTRUCT JOINTS AT 10 FOOT INTERVALS. JOINTS TO BE FILLED WITH FLEXIBLE URETHANE–EPOXY BLEND JOINT COMPOUND. CONTRACTOR SHALL SUBMIT PRODUCT CUT SHEET FOR APPROVAL.
4. WET CURE CONCRETE FOR MINIMUM 2 WEEKS AFTER PLACEMENT OR AS DIRECTED BY OWNER'S ENGINEER.
5. BROOM FINISH SURFACE.
6. POSITION WELDED WIRE FABRIC & REBAR USING APPROVED REBAR CHAIRS.
7. REMEDIAL TRAILER LAYOUT IS CONCEPTUAL AND THE CONTRACTOR SHALL PROVIDE FINAL LAYOUT AFTER CONTRACT AWARD FOR APPROVAL.
8. EQUIPMENT TRAILER TO BE SET ON PAD ONLY AFTER 95% CONCRETE STRENGTH ACHIEVED.
9. CONTRACTOR TO CENTER EQUIPMENT TRAILER ON PAD.

CB&I ENVIRONMENTAL & INFRASTRUCTURE, INC.
1228 WINTER GARDEN VINELAND ROAD
WINTER GARDEN, FLORIDA 34787
(407) 287-3200 OFFICE
(407) 287-3201 FAX

OFFICE: WINTER GARDEN	DATE: 2–25–15	ACAD FILE: 3309B6	
REMEDIAL EQUIPMENT LAYOUT DETAILS			
CLIENT: PUBLIC WORKS DEPARTMENT LAKE COUNTY, FLORIDA			PM: EK
LOCATION: LAKE COUNTY ASTATULA REFUELING FACILITY FDEP FACILITY No. 358622951 13130 COUNTY LANDFILL ROAD TAVARES, FLORIDA 32778			
DESIGNED: EK	DRAWN: SDJF	PROJECT NO.: 153309	FIGURE: C-6

LINE IDENTIFICATION CODES

LINE NUMBERING

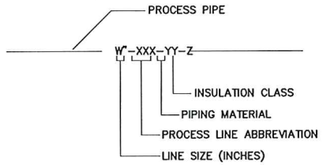

PIPING MATERIAL IDENTIFICATION

CPVC	CHLORINATED POLYVINYL CHLORIDE
CS	CARBON STEEL
COP	COPPER
CPP	CORRUGATED PLASTIC PIPE
CIP	CAST IRON PIPE
DIP	DUCTILE IRON PIPE
FH	FLEXIBLE HOSE
GAL	GALVANIZED STEEL PIPE
NYL	NYLON
PE	POLYETHYLENE PIPE
PP	POLYPROPYLENE PIPE
PVC	POLYVINYL PIPE
RUB	RUBBER HOSE
SS	STAINLESS STEEL

PROCESS LINE ABBREVIATIONS

AIR	AIR, ATMOSPHERIC PRESSURE
BW	BACKWASH
CA	COMPRESSED AIR
CD	CONDENSATE
CF	CHEMICAL FEED
CGW	CONTAMINATED GROUNDWATER
D	DRAIN
EFF	EFFLUENT
EXH	EXHAUST
GW	GROUNDWATER
LFG	LANDFILL GAS
NPW	NON-POTABLE WATER
P	PRODUCT
PW	POTABLE WATER
S	SANITARY
SL	SLUDGE
SP	SAMPLE PORT
STS	STORM SEWER
TF	TOTAL FLUIDS
V	VENT
VAP	VAPOR

LINE CODING

- PROCESS FLOW
- PNEUMATIC SIGNAL
- WIRELESS SIGNAL

ELECTRICAL SIGNALS

- 4-20mA / LOW VOLTAGE
- LINE VOLTAGE
- IS

PROCESS PIPE CONVEYANCE

- LIQUID CONDUIT
- VAPOR CONDUIT

VALVE AND PIPING SYMBOLS

- GLOBE VALVE
- GATE VALVE
- BUTTERFLY VALVE
- CHECK VALVE
- PLUG VALVE
- 3-WAY VALVE
- ANGLE VALVE
- RELIEF OR SAFETY VALVE
- BALL VALVE
- GLOBE VALVE
- SELF-CONTAINING PRESSURE REGULATING VALVE
- KNIFE GATE VALVE
- BP BACKFLOW PREVENTER
- NO NORMALLY OPEN
- NC NORMALLY CLOSED
- FLEXIBLE HOSE
- FLEXIBLE COUPLING
- MOTOR DRIVEN
- S SAMPLE PORT
- BASKET TYPE STRAINER
- Y-TYPE STRAINER
- DUPLEX STRAINER
- SLEEVE COUPLING (SC)
- FLOOR DRAIN
- EQUIPMENT DRAIN
- CLEANOUT (CO)
- REMOVABLE PLUG
- REMOVABLE CAP
- EXHAUST TO ATMOSPHERE (INSIDE)
- EXHAUST TO ATMOSPHERE (OUTSIDE)
- REDUCER
- UNION
- QUICK DISCONNECT COUPLING
- BF BLIND FLANGE
- FLANGE
- DAMPER
- TEST PORT WITH STOP COCK VALVE

VALVE OPERATOR SYMBOLS

- S SOLENOID
- M MOTOR, ELECTRIC
- P PNEUMATIC
- DIAPHRAGM WITH POSITIONER
- T HANDWHEEL OR LEVER
- CHAINWHEEL

PRIMARY ELEMENT SYMBOLS – FLOW

- ORIFICE PLATE
- PITOT TUBE
- THERMAL MASS FLOW METER
- ROTOMETER
- FLUME
- WEIR
- TURBINE OR PROPELLOR TYPE METER
- MAGNETIC FLOW METER
- TOTALING FLOW METER

EQUIPMENT SYMBOLS

- PUMP
- PNEUMATIC DIAPHRAGM PUMP
- LIQUID RING VACUUM PUMP
- BLOWER
- AIR COMPRESSOR
- POSITIVE DISPLACEMENT PUMP
- SCREW PUMP

FUNCTIONAL ABBREVIATIONS

DO	DISSOLVED OXYGEN	OC	OPEN-CLOSE
FC	FAIL CLOSED	OO	ON-OFF (MAINTAINED)
FI	FAIL INTERMINATE	ORP	OXIDATION REDUCTION POTENTIAL
FL	FAIL LOCKED	OSC	OPEN-STOP-CLOSE (MOMENTARY)
FO	FAIL OPEN	SS	START-STOP (MONENTARY)
HOA	HAND-OFF-AUTOMATIC	>	HIGH SELECT
I/I	CURRENT-TO-CURRENT	<	LOW SELECT
I/P	CURRENT-TO-PNEUMATIC		
LEL	LOWER EXPLOSIVE LIMIT		
LR	LOCAL-REMOTE		

INSTRUMENT IDENTIFICATION

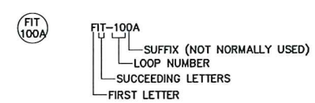

- LEL LEL METER
- TT TEMPERATURE TRANSMITTER
- DPT DIF PRESSURE TRANSMITTER
- PT PRESSURE TRAMSMITTER
- VT VACUUM TRANSMITTER
- PS PRESSURE SWITCH
- TS TEMP SWITCH

GENERAL INSTRUMENT SYMBOLS

- LOCALLY MOUNTED
- FRONT-OF PANEL MOUNTED
- BACK-OF-PANEL MOUNTED
- I INTERLOCK
- P PURGE
- PLC FUNCTION BLOCK

INSTRUMENT IDENTIFICATION TABLE

	FIRST LETTER		SUCCEEDING LETTERS		
	MEASURED OR INITIATING VARIABLE	MODIFIER	READOUT OR PASSIVE FUNCTION	OUTPUT FUNCTION	MODIFIER
A	ANALYSIS		ALARM		
B	BURNER FLAME				
C	CONDUCTIVITY			CONTROL	
D	DENSITY (SP, GR)	DIFFERENTIAL		DRIVE	
E	VOLTAGE		PRIMARY ELEMENT		
F	FLOW RATE	RATIO			
G	GAUGING (DIMENSIONAL)		GLASS		
H	HAND (MANUAL)				HIGH
I	CURRENT		INDICATE		
J	POWER	SCAN			
K	TIME OR SCHEDULE			CONTROL STATION	
L	LEVEL		LIGHT (PILOT)		LOW
M	MOISTURE OR HUMIDITY				MIDDLE
N					
O			ORIFICE		
P	PRESSURE		POINT (TEST)		
Q	QUANT. OR EVENT	INTEGRATE			
R	RADIOACTIVITY		RECORD OR PRINT		
S	SPEED OR FREQ.	SAFETY		SWITCH	
T	TEMPERATURE			TRANSMIT	
U	ULTRAVIOLET		MULTIFUNCTION		
V	VISCOSITY			VALVE OR DAMPER	
W	WEIGHT OR FORCE		WELL		
X	THERMOCOUPLE		UNCLASSIFIED		
Y	VIBRATION			RELAY OR COMPUTE	
Z	POSITION			DRIVE, ACTUATE	

CB&I ENVIRONMENTAL & INFRASTRUCTURE, INC.
1228 WINTER GARDEN VINELAND ROAD
WINTER GARDEN, FLORIDA 34787
(407) 287-3200 OFFICE
(407) 287-3201 FAX

OFFICE: WINTER GARDEN	DATE: 2-25-15	ACAD FILE: 3309B18

PROCESS AND INSTRUMENTATION DIAGRAM LEGEND

CLIENT: PUBLIC WORKS DEPARTMENT LAKE COUNTY, FLORIDA	PM: EK

LOCATION: LAKE COUNTY ASTATULA REFUELING FACILITY
FDEP FACILITY No. 358622951
13130 COUNTY LANDFILL ROAD
TAVARES, FLORIDA 32778

DESIGNED:	DRAWN:	PROJECT NO.:	FIGURE:
EK	SDJF	153309	P-1

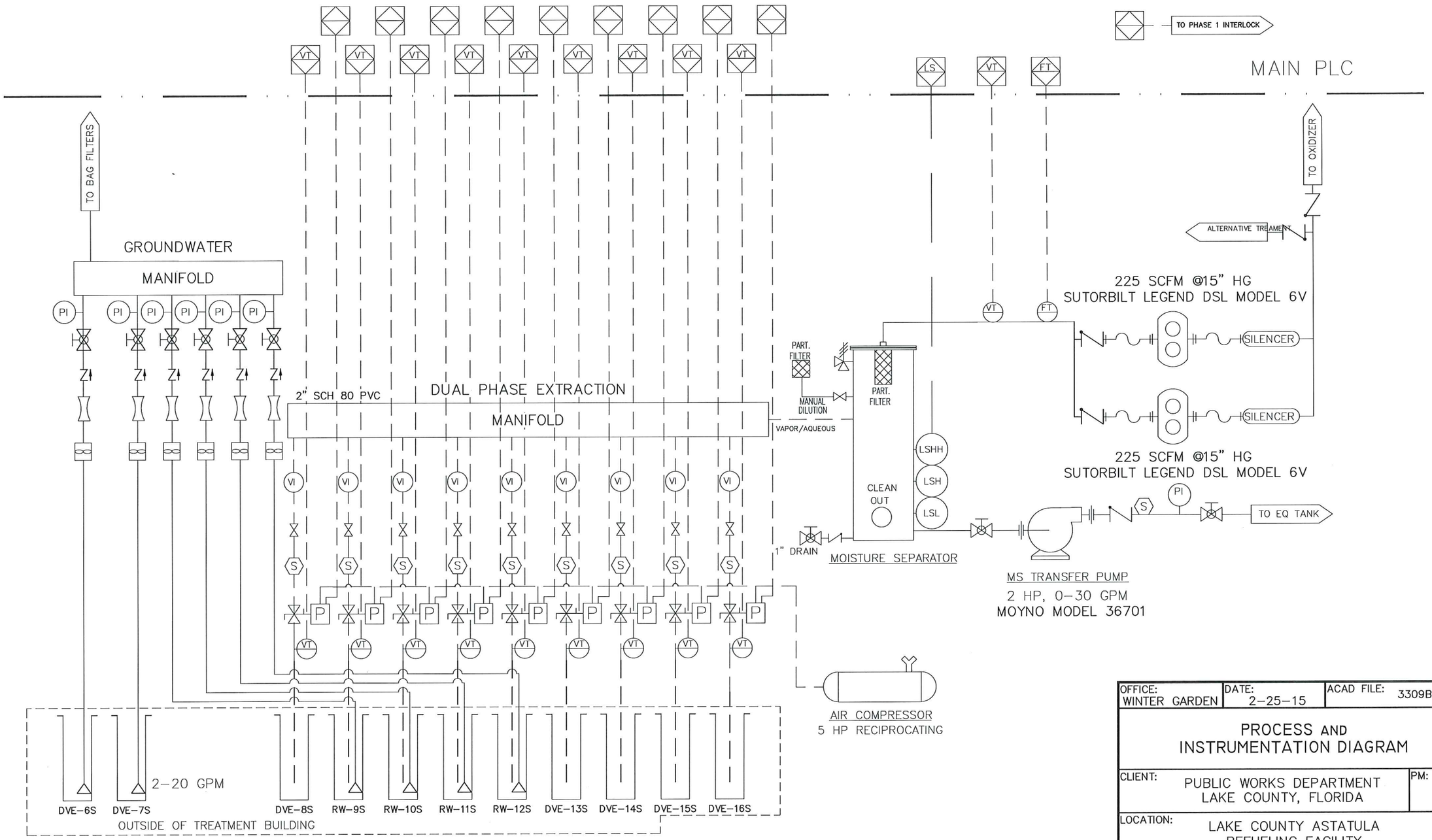

CB&I ENVIRONMENTAL & INFRASTRUCTURE, INC.
1228 WINTER GARDEN VINELAND ROAD
WINTER GARDEN, FLORIDA 34787
(407) 287-3200 OFFICE
(407) 287-3201 FAX

OFFICE: WINTER GARDEN	DATE: 2-25-15	ACAD FILE: 3309B16	
PROCESS AND INSTRUMENTATION DIAGRAM			
CLIENT: PUBLIC WORKS DEPARTMENT LAKE COUNTY, FLORIDA			PM: EK
LOCATION: LAKE COUNTY ASTATULA REFUELING FACILITY FDEP FACILITY No. 358622951 13130 COUNTY LANDFILL ROAD TAVARES, FLORIDA 32778			
DESIGNED: EK	DRAWN: SDJF	PROJECT NO.: 153309	FIGURE: P-2

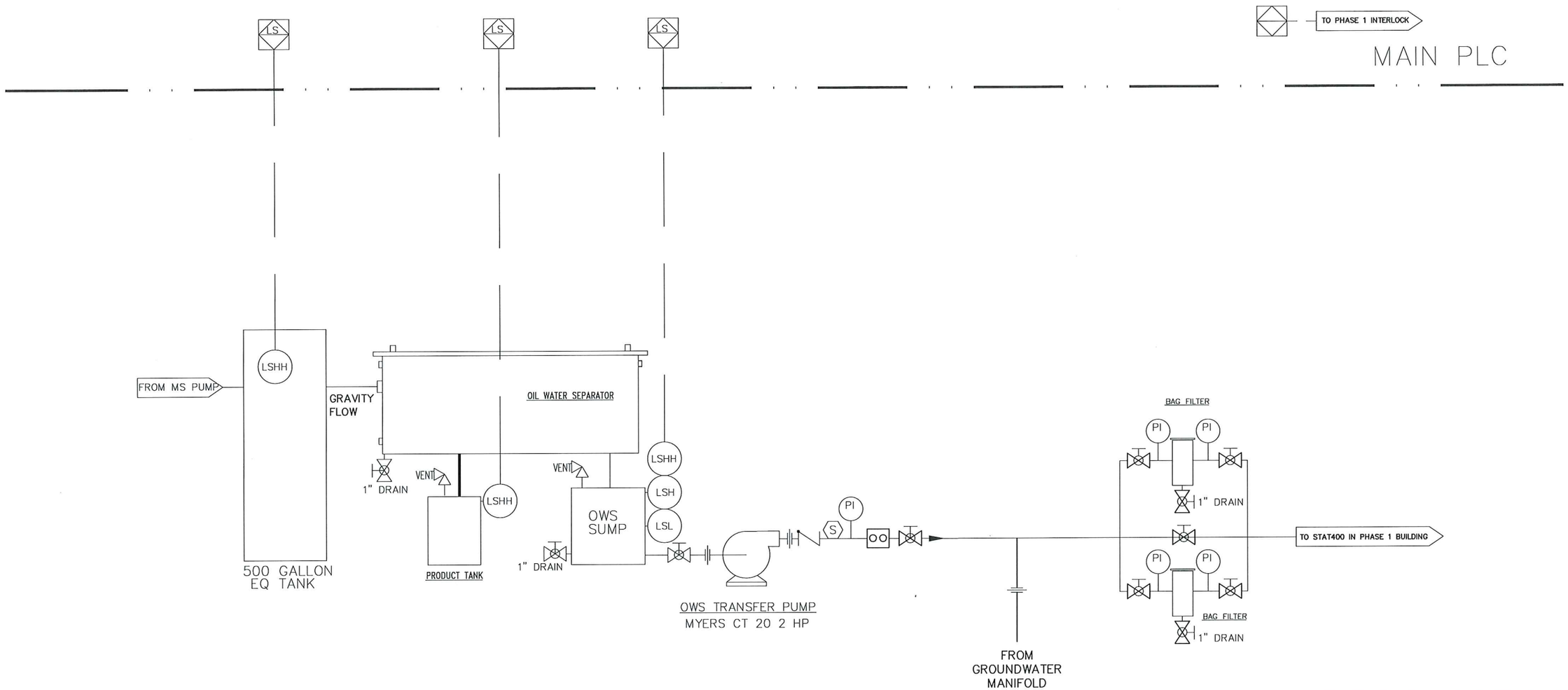

OFFICE: WINTER GARDEN	DATE: 2-25-15	ACAD FILE: 3309B17

PROCESS AND INSTRUMENTATION DIAGRAM

CLIENT: PUBLIC WORKS DEPARTMENT LAKE COUNTY, FLORIDA	PM: EK

LOCATION:
LAKE COUNTY ASTATULA
REFUELING FACILITY
FDEP FACILITY No. 358622951
13130 COUNTY LANDFILL ROAD
TAVARES, FLORIDA 32778

CB&I ENVIRONMENTAL & INFRASTRUCTURE, INC.
1228 WINTER GARDEN VINELAND ROAD
WINTER GARDEN, FLORIDA 34787
(407) 287-3200 OFFICE
(407) 287-3201 FAX

DESIGNED:	DRAWN:	PROJECT NO.:	FIGURE:
EK	SDJF	153309	P-3

COMPANY/CUSTOMER: CARBONAIR
PROJECT DESCRIPTION: ASTATULA REFUELING
SALES ORDER NUMBER: ITEM A

PROJECT NAME ASTATULA_MAIN
RESPONSIBLE FOR PROJECT AJH

REVISION HISTORY

REV	REVISION COMMENTS	CREATED BY	DATE
0	RELEASED FOR SUBMITTAL	AJH	2011-01-14
A	PRODUCTION AS BUILT	MAK	2011-04-28

PANEL CERTIFICATION

UL698A

NUMBER OF PAGES 5

THIS DOCUMENT IS THE COPYRIGHTED PROPERTY OF DRC, INC. AND MAY NOT BE REPRODUCED WITHOUT DRC WRITTEN PERMISSION OR USED FOR OTHER THAN DRC AUTHORIZED PURPOSES.

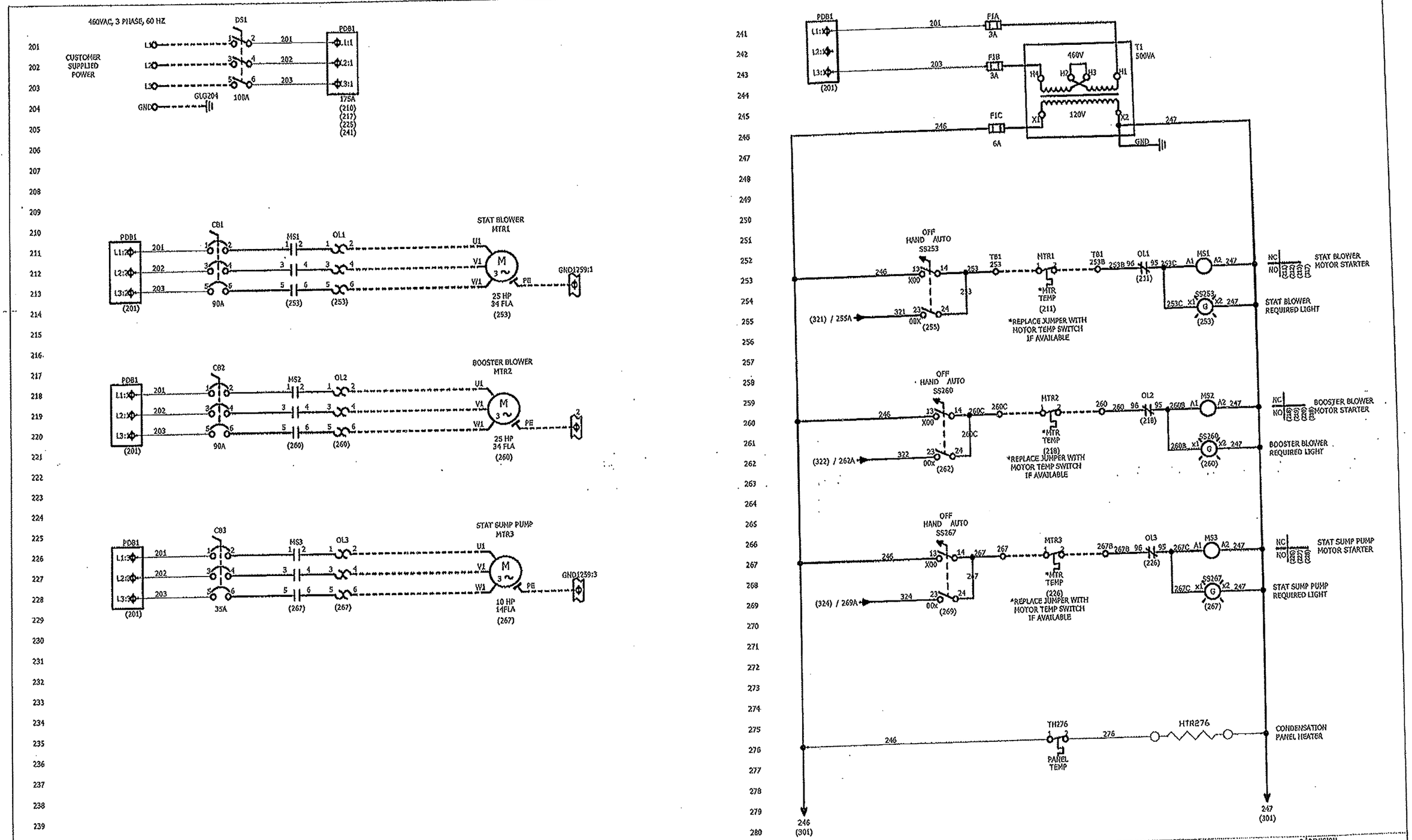

CARBONAIR	PROJECT DESCRIPTION ASTATULA REFUELING	SALES ORDER NUMBER CUSTOMER CARBONAIR	THIS DOCUMENT IS THE COPYRIGHTED PROPERTY OF DRC, INC. AND MAY NOT BE REPRODUCED WITHOUT DRC WRITTEN PERMISSION OR USED FOR OTHER THAN DRC AUTHORIZED PURPOSES.	PAGE DESCRIPTION ELECTRICAL SCHEMATIC	PAGE NUMBER 2 TOTAL NO. OF PAGES 5 PREVIOUS PAGE 1 NEXT PAGE 3	REVISION A

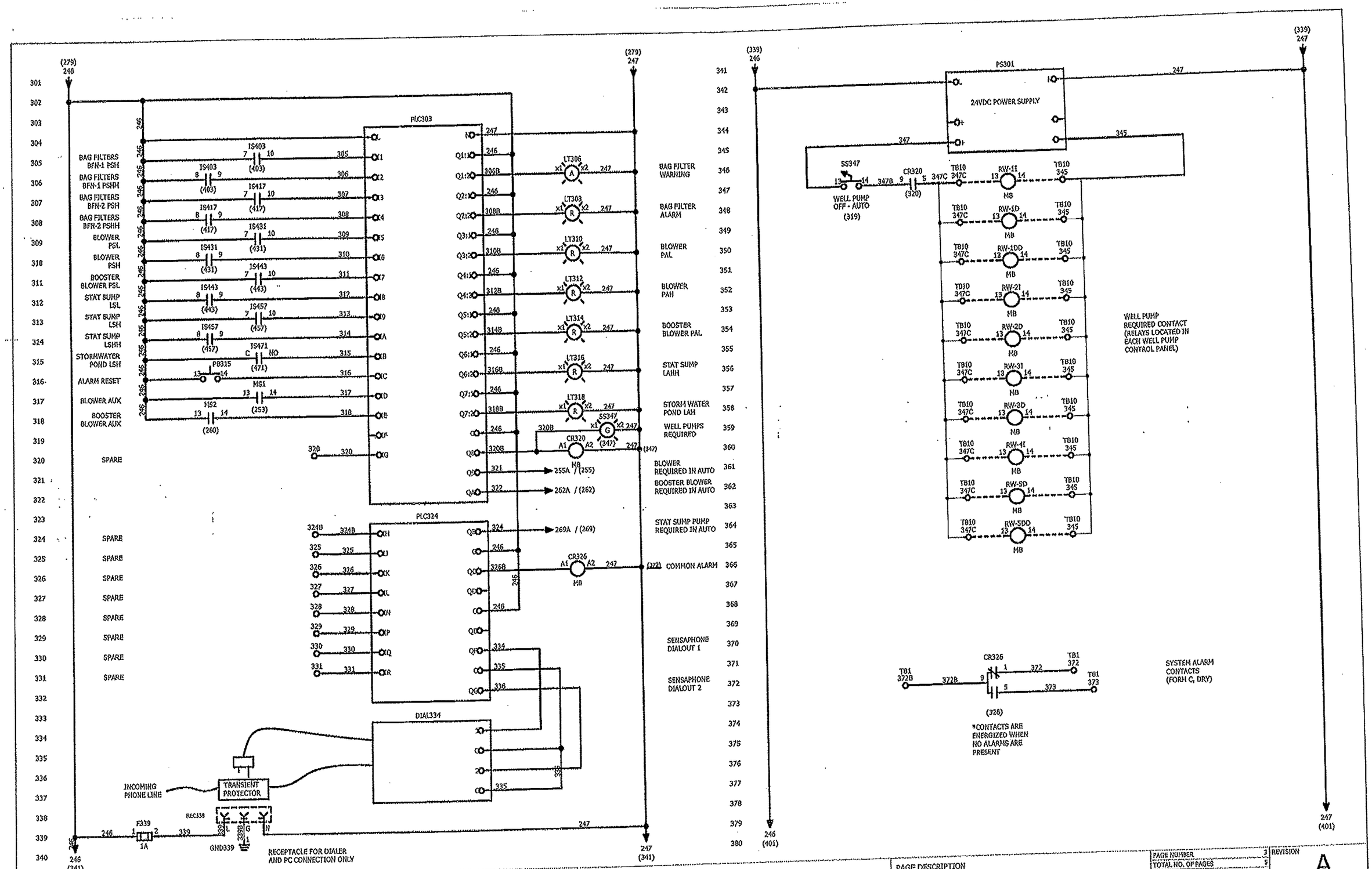

CARBONAIR	PROJECT DESCRIPTION: ASTATULA REFUELING	SALES ORDER NUMBER / CUSTOMER: CARBONAIR	THIS DOCUMENT IS THE COPYRIGHTED PROPERTY OF DRC, INC. AND MAY NOT BE REPRODUCED WITHOUT DRC WRITTEN PERMISSION OR USED FOR OTHER THAN DRC AUTHORIZED PURPOSES.
PAGE DESCRIPTION: ELECTRICAL SCHEMATIC	PAGE NUMBER 3 / TOTAL NO. OF PAGES 5 / PREVIOUS PAGE 2 / NEXT PAGE 4	REVISION: A	

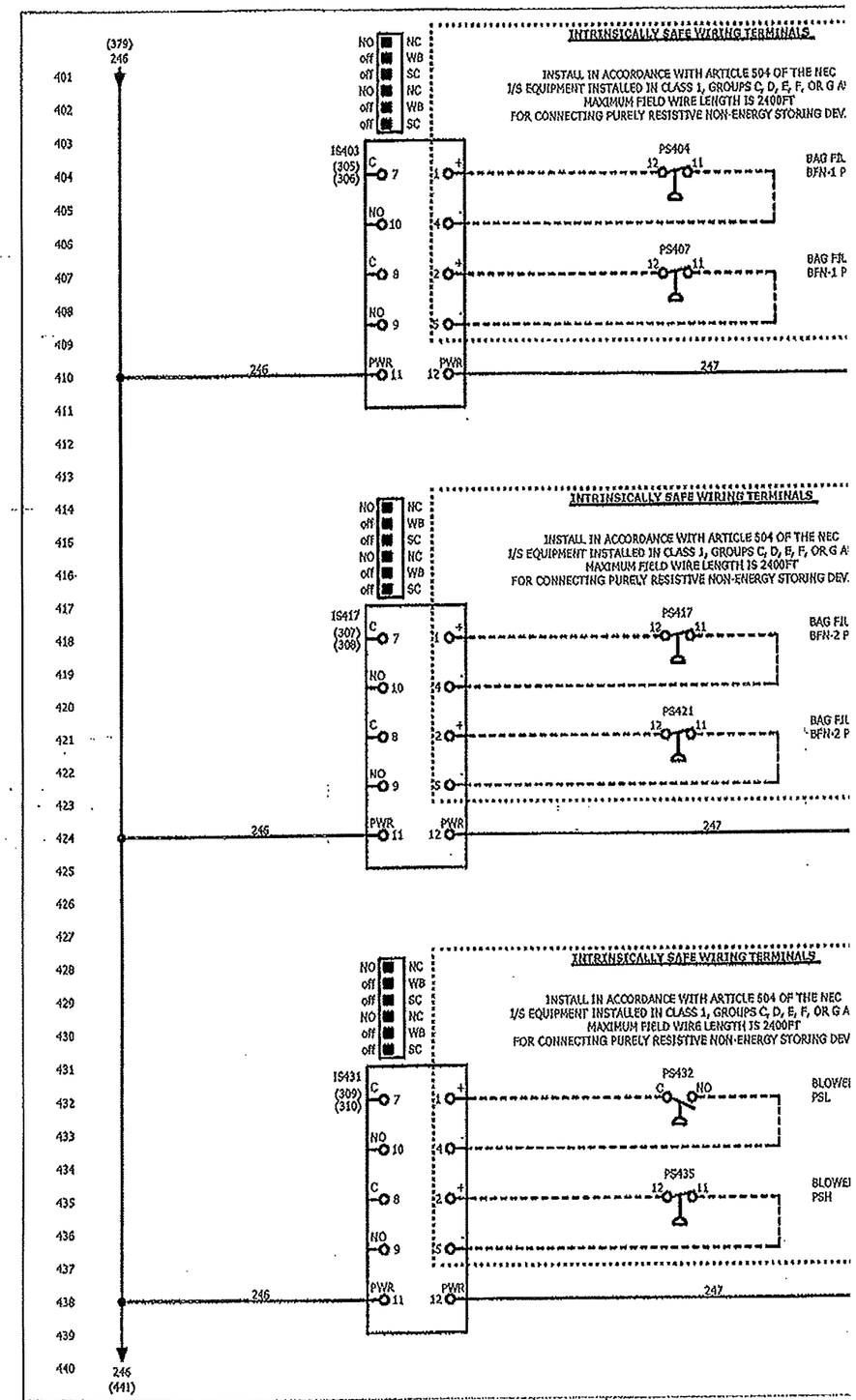

CARBONAIR	PROJECT DESCRIPTION ASTATULA REFUELING	SALES ORDER NUMBER CUSTOMER CARBONAI

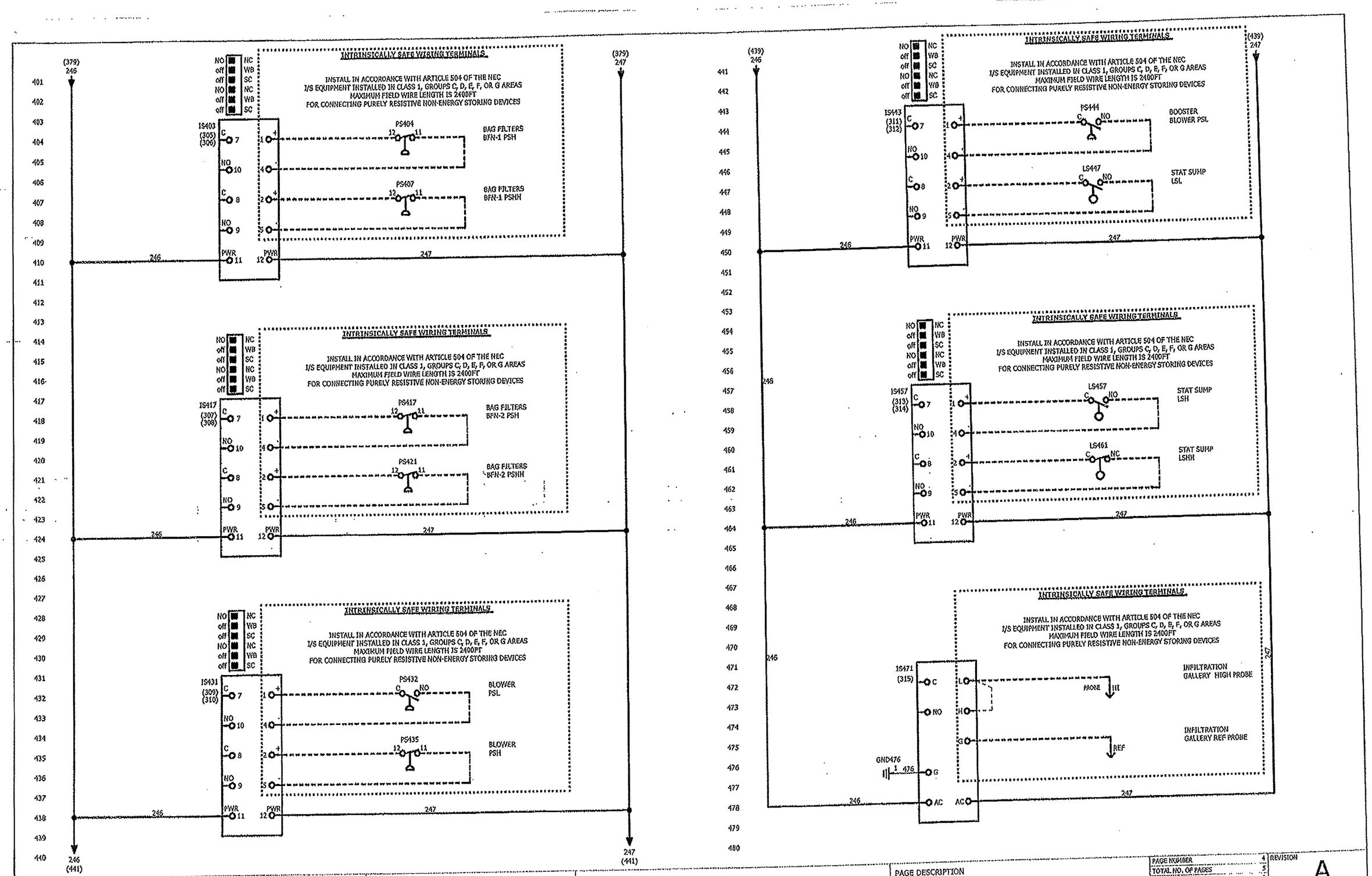

CARBONAIR	PROJECT DESCRIPTION ASTATULA REFUELING	SALES ORDER NUMBER CUSTOMER CARBONAIR	THIS DOCUMENT IS THE COPYRIGHTED PROPERTY OF DRC, INC. AND MAY NOT BE REPRODUCED WITHOUT DRC WRITTEN PERMISSION OR USED FOR OTHER THAN DRC AUTHORIZED PURPOSES.	PAGE DESCRIPTION ELECTRICAL SCHEMATIC	PAGE NUMBER 4 TOTAL NO. OF PAGES 5 PREVIOUS PAGE 3 NEXT PAGE 5	REVISION A

INNER DOOR NAMEPLATE SCHEDULE

DEVICE ID	LEGEND PLATE
DS1	MAIN DISCONNECT SWITCH
LT306	BAG FILTERS PRESSURE WARNING
LT308	BAG FILTERS HIGH PRESSURE
LT310	STAT BLOWER LOW PRESSURE
LT312	STAT BLOWER HIGH PRESSURE
LT314	BOOSTER BLOWER LOW PRESSURE
LT316	STAT SUMP HIGH LEVEL
LT318	INFILTRATION GALLERY HIGH LEVEL
SS253	STAT BLOWER HAND-OFF-AUTO
SS260	BOOSTER BLOWER HAND-OFF-AUTO
SS267	STAT SUMP PUMP HAND-OFF-AUTO
SS347	WELL PUMPS OFF - AUTO
PB315	ALARM RESET
DIAL334	SYSTEM DIALER

INNER DOOR LAYOUT

36" HIGH X 30" WIDE

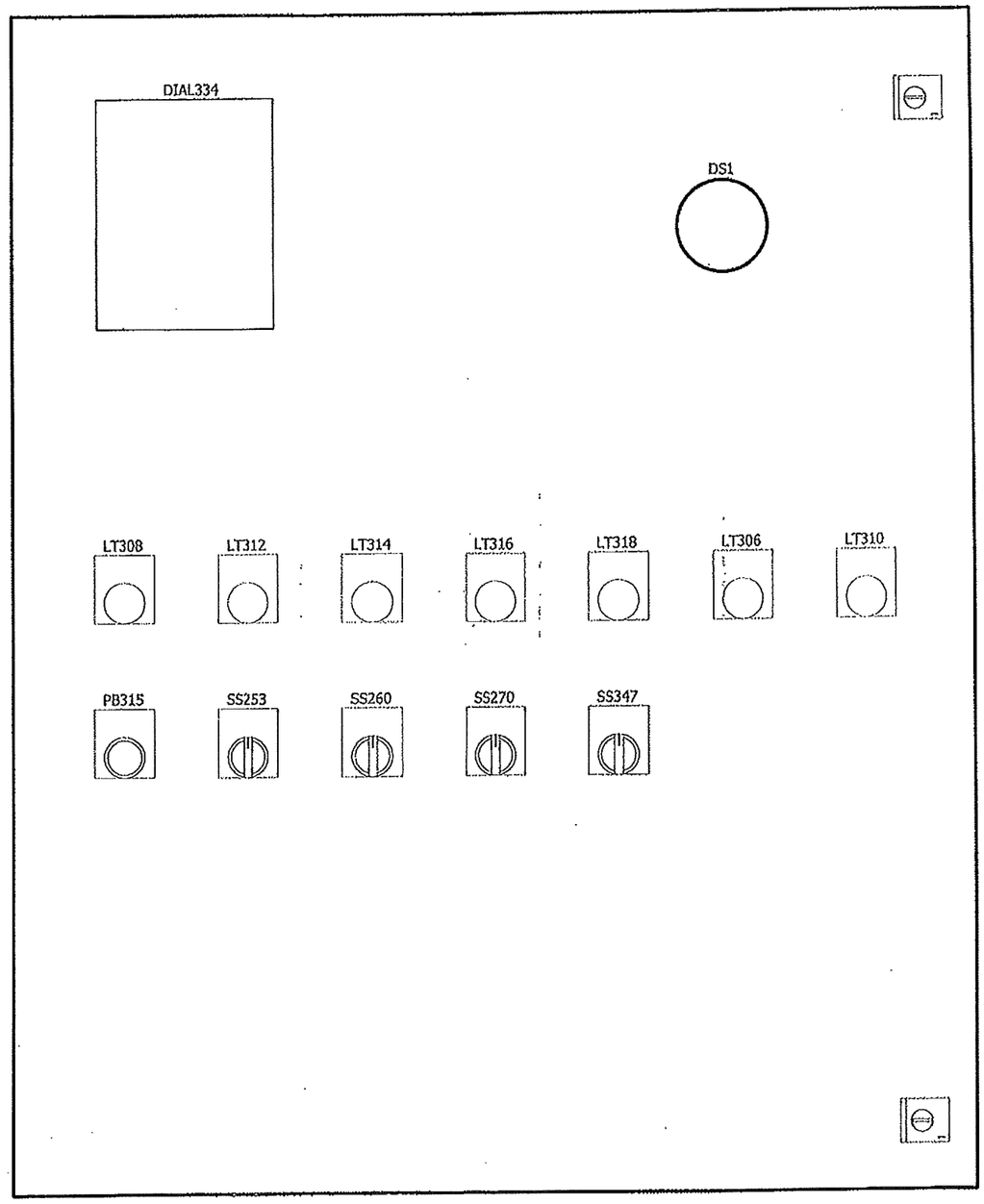

PROJECT DESCRIPTION ASTATULA REFUELING	SALES ORDER NUMBER CUSTOMER CARBONAIR	THIS DOCUMENT IS THE COPYRIGHTED PROPERTY OF DRC, INC. AND MAY NOT BE REPRODUCED WITHOUT DRC WRITTEN PERMISSION OR USED FOR OTHER THAN DRC AUTHORIZED PURPOSES.	PAGE DESCRIPTION INNER DOOR LAYOUT	PAGE NUMBER 5 TOTAL NO. OF PAGES 5 PREVIOUS PAGE 4 NEXT PAGE	REVISION A

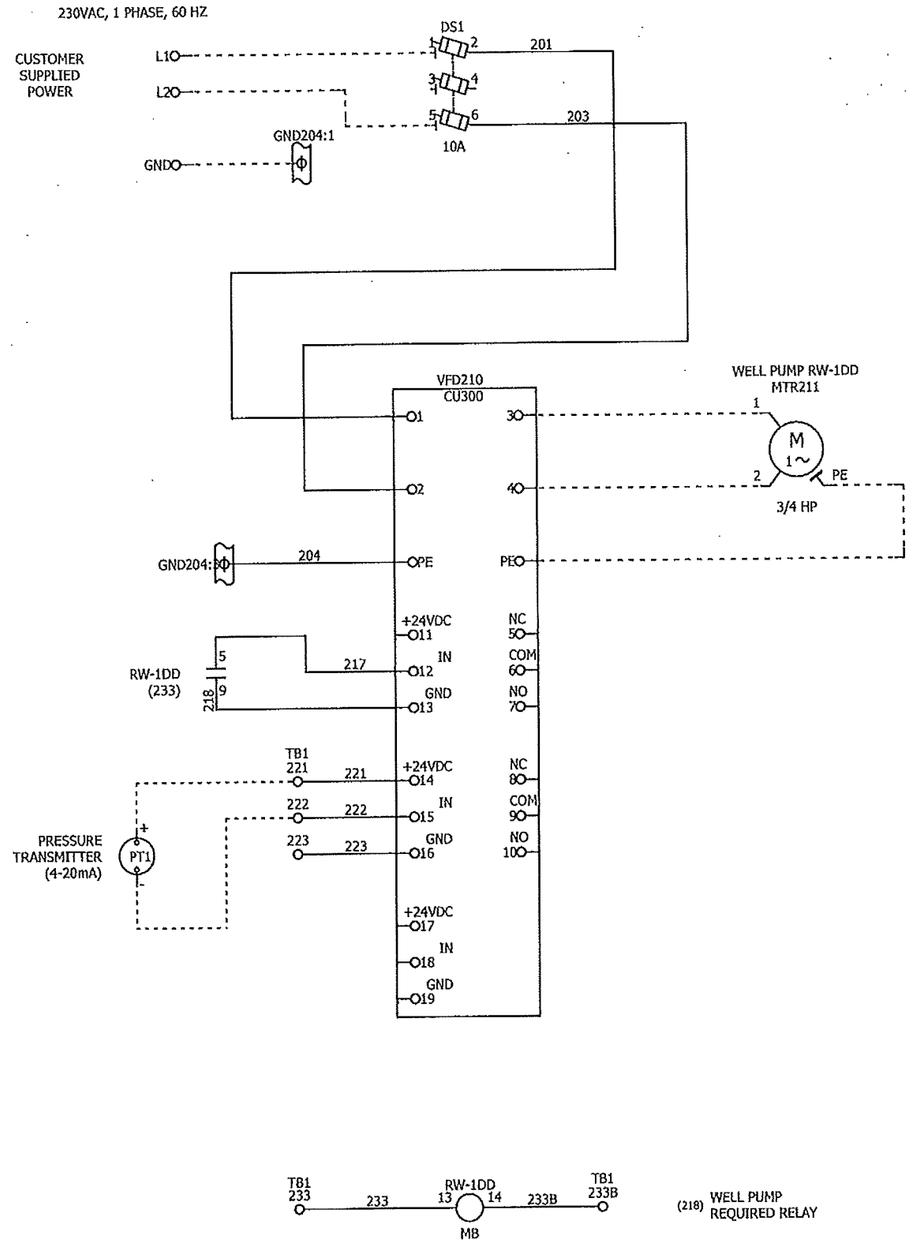

AS-BUILT

PROJECT DESCRIPTION
ASTATULA WELL PUMP

SALES ORDER NUMBER

CUSTOMER CARBONAIR

THIS DOCUMENT IS THE COPYRIGHTED PROPERTY OF DRC, INC. AND MAY NOT BE REPRODUCED WITHOUT DRC WRITTEN PERMISSION OR USED FOR OTHER THAN DRC AUTHORIZED PURPOSES.

PAGE DESCRIPTION
ELECTRICAL SCHEMATIC

PAGE NUMBER	2
TOTAL NO. OF PAGES	2
PREVIOUS PAGE	1
NEXT PAGE	

REVISION

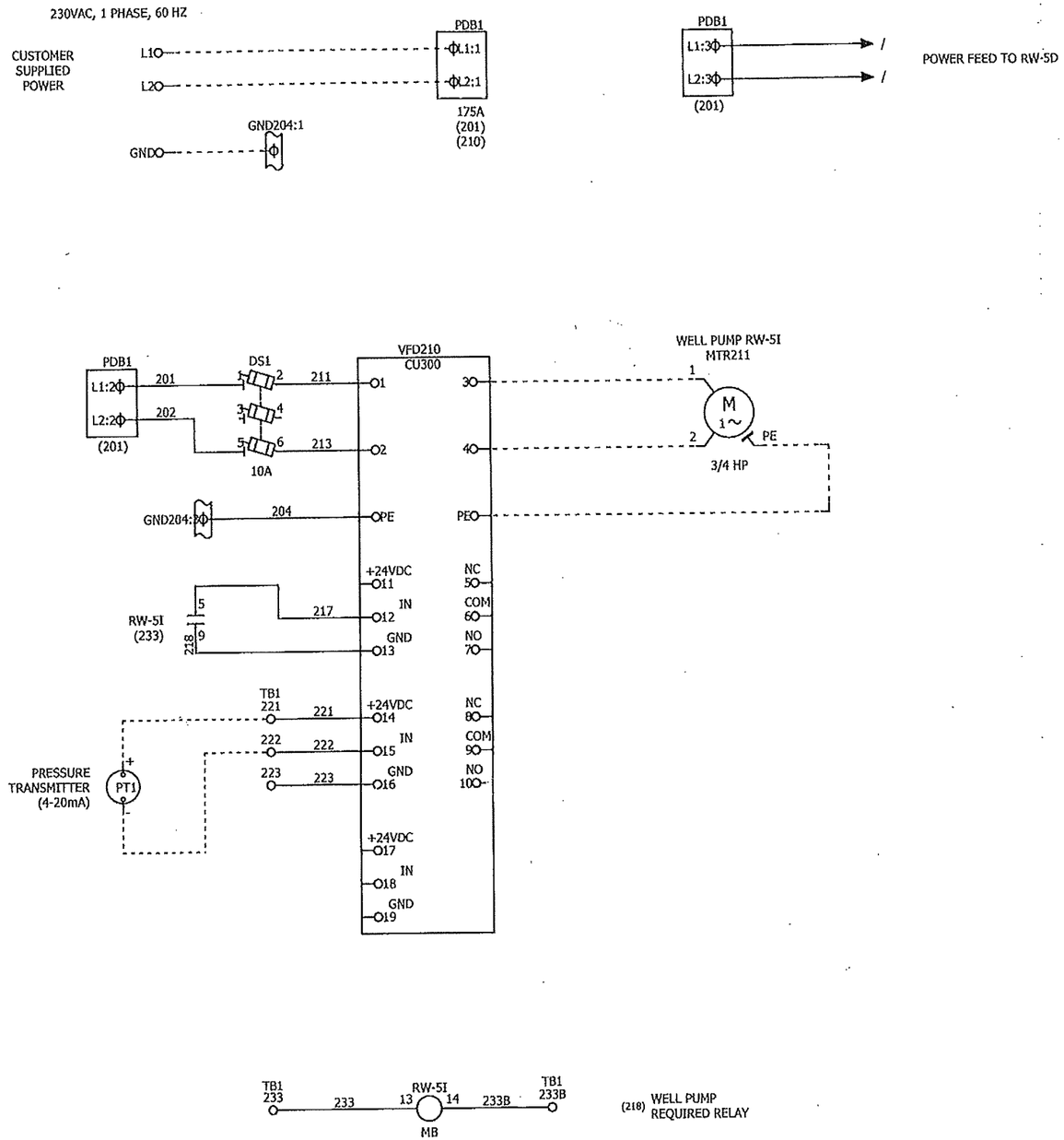

AS-BUILT

PROJECT DESCRIPTION ASTATULA WELL PUMP	SALES ORDER NUMBER CUSTOMER CARBONAIR	THIS DOCUMENT IS THE COPYRIGHTED PROPERTY OF DRC, INC. AND MAY NOT BE REPRODUCED WITHOUT DRC WRITTEN PERMISSION OR USED FOR OTHER THAN DRC AUTHORIZED PURPOSES.	PAGE DESCRIPTION ELECTRICAL SCHEMATIC

PAGE NUMBER	2
TOTAL NO. OF PAGES	2
PREVIOUS PAGE	1
NEXT PAGE	

REVISION

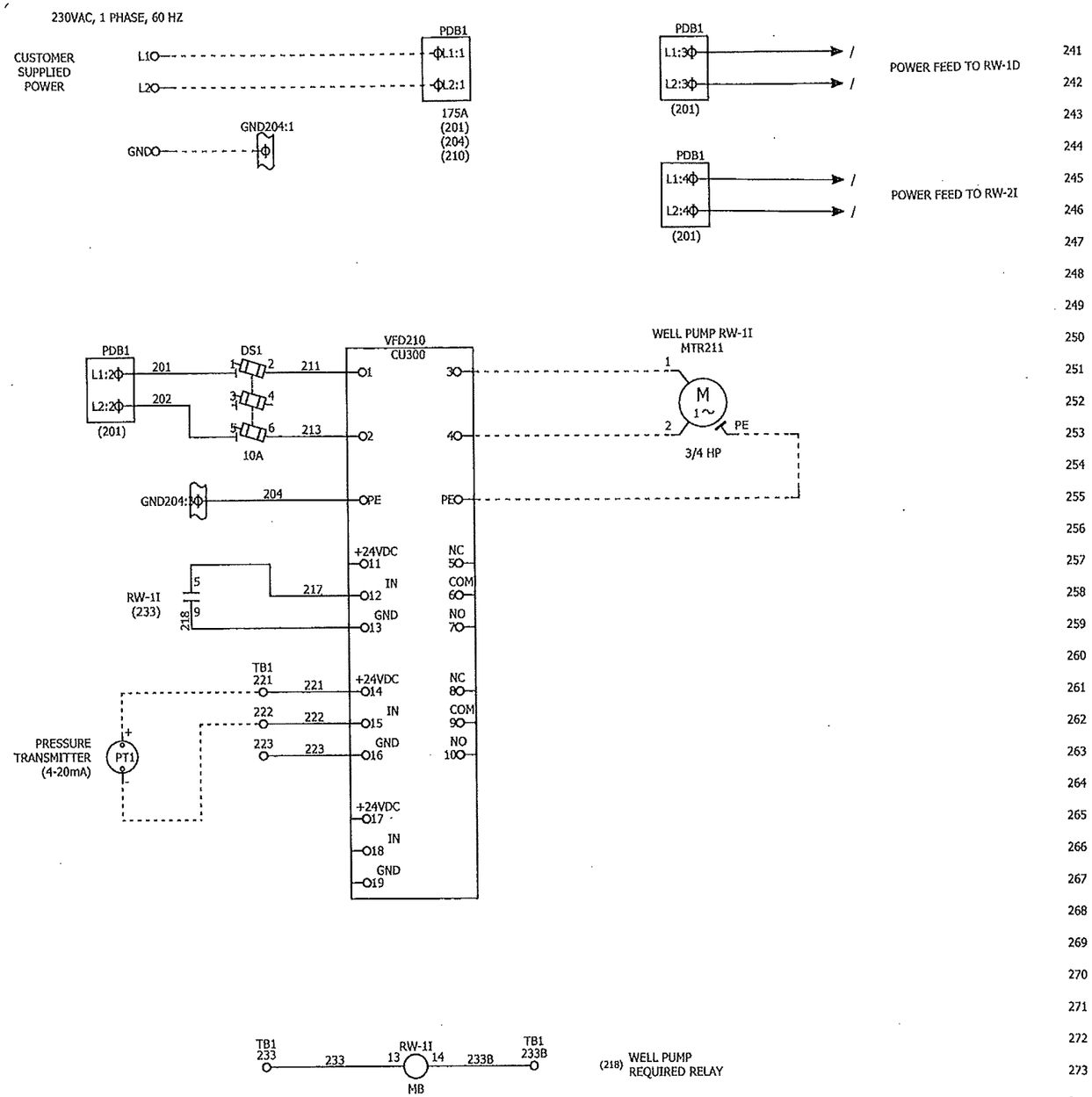

AS-BUILT

PROJECT DESCRIPTION
ASTATULA WELL PUMP

SALES ORDER NUMBER

CUSTOMER CARBONAIR

THIS DOCUMENT IS THE COPYRIGHTED PROPERTY OF DRC, INC. AND MAY NOT BE REPRODUCED WITHOUT DRC WRITTEN PERMISSION OR USED FOR OTHER THAN DRC AUTHORIZED PURPOSES.

PAGE DESCRIPTION
ELECTRICAL SCHEMATIC

PAGE NUMBER	2
TOTAL NO. OF PAGES	2
PREVIOUS PAGE	1
NEXT PAGE	

REVISION

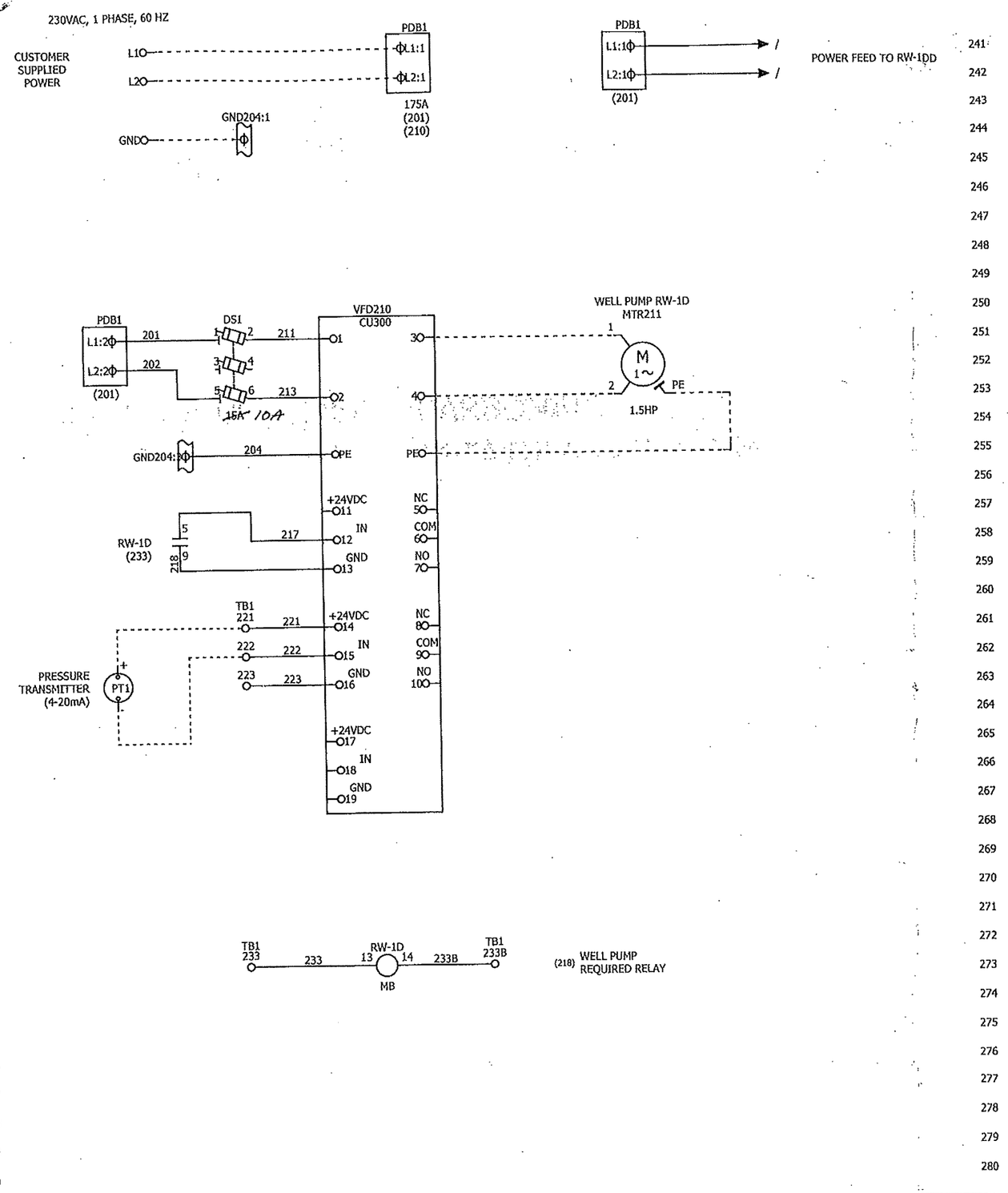

AS-BUILT

PROJECT DESCRIPTION ASTATULA WELL PUMP	SALES ORDER NUMBER CUSTOMER CARBONAIR	THIS DOCUMENT IS THE COPYRIGHTED PROPERTY OF DRC, INC. AND MAY NOT BE REPRODUCED WITHOUT DRC WRITTEN PERMISSION OR USED FOR OTHER THAN DRC AUTHORIZED PURPOSES.	PAGE DESCRIPTION ELECTRICAL SCHEMATIC	PAGE NUMBER 2 TOTAL NO. OF PAGES 2 PREVIOUS PAGE 1 NEXT PAGE REVISION

NOTES:

1. CONTRACTOR TO VERIFY PIPE INVERT WITH COUNTY ENGINEER.
2. REMOVE TWO SMALL TREES.
3. REMOVE AND REPLACE 135' OF 8' HIGH CHAIN LINK FENCE.

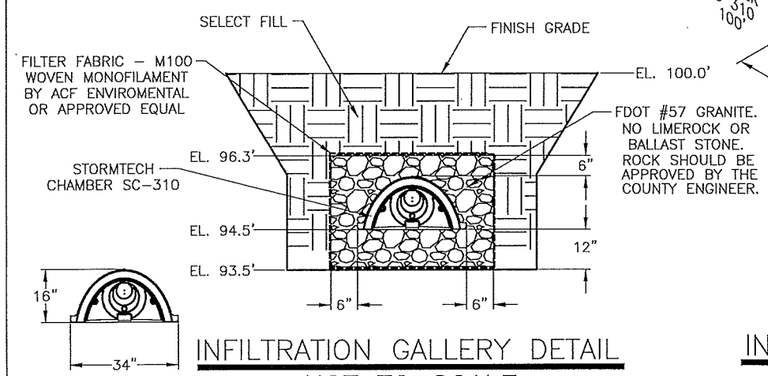

INFILTRATION GALLERY DETAIL

NOT TO SCALE

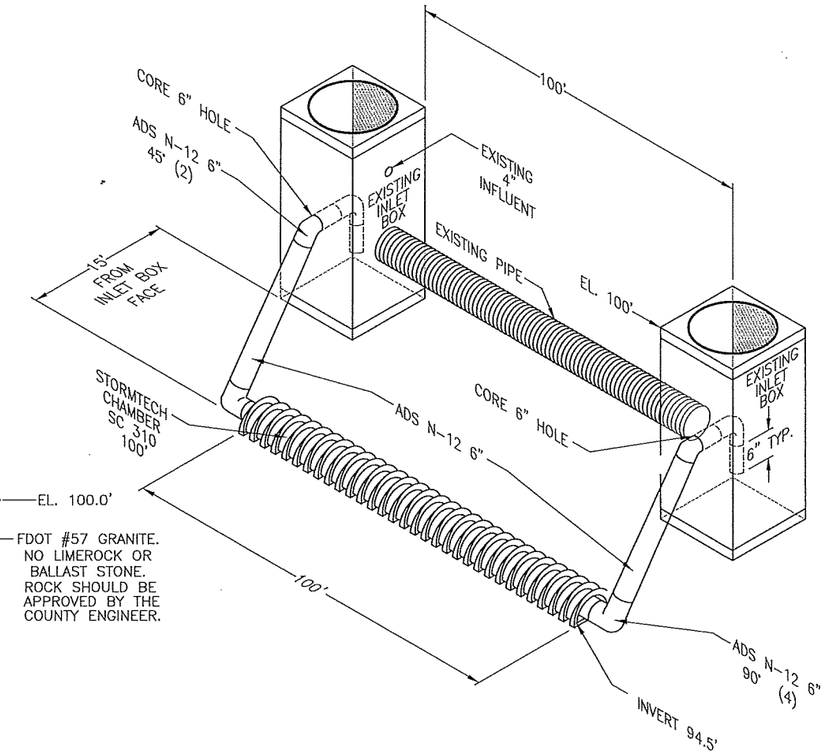

INFILTRATION GALLERY ISOMETRIC

NOT TO SCALE

REVISION:	DATE	SECTION	TOWNSHIP	RANGE		DEPARTMENT OF PUBLIC WORKS	FUEL REMEDIATION SYSTEM INFILTRATION GALLERY MODS PLAN	ENGINEER OF RECORD:	CAD FILE
		00	00 S	00 E	LAKE COUNTY FLORIDA	ENGINEERING DIVISION 437 ARDICE AVE. EUSTIS, FLORIDA 32726		ALAN KIRKLAND STATE OF FLORIDA PROFESSIONAL ENGINEER LICENSE NO. 61729	INFILTRATION GALLERY
		DESIGNED: A.K.		DATE:					SHEET #
		DRAWN: R.L.S.		DATE: 7/5/15			DRAFT FOR REVIEW ONLY	DATE	1
		APPROVED:		DATE:					