ATTACHMENT 7

ITB 15-037
Construction Phase II Remedial System
Astatula Fuel Facility

Specifications, Construction Drawings and Schematics

List of Specifications

Project Guidance Specifications	Page 1
Shop-built Remedial System	Page 6
Submersible Pumps and Control Modules	Page 21
Well Installation	Page 23
Design Manual StormTech Chamber Systems	31 Total Pages
M100 Technical Data Sheet	1 Page
StormTech Construction Guide	6 Total Pages

List of Construction Drawings

C-1Phase II Remedial System Layout
C-2 Trench Sections
C-3 DPE/Groundwater Recovery Well Details
C-4 DPE and Groundwater Well Details
C-5 Surface Cover and Concrete Slab Details
C-6 Remedial Equipment Layout Details
P-1 Process and Instrumentation Diagram
P-2 Process and Instrumentation Diagram
P-3 Process and Instrumentation Diagram
Infiltration Gallery Detail

List of Schematics

Schematics – Astatula Main
Schematics – Astatula Well

PROJECT GUIDANCE

Part 1: General

The Astatula Refueling Facility previously dispensed gasoline and diesel fuel to County vehicles from a 15,000-gallon and 22,000-gallon underground storage tank (UST), respectively. Both tanks were replaced with aboveground gasoline and diesel storage tanks (ASTs) in 1987. In March 1991, petroleum hydrocarbons detected in the groundwater were reported to the FDEP and the site was accepted into the Petroleum Cleanup Participation Program (PCPP). Based on assessment results, the former UST area (source area) exhibits petroleum contamination as Light Nonaqueous Phase Liquid (LNAPL) and dissolved in the groundwater. The dissolved petroleum contaminate plume extents approximately 1,300 feet west from the source area. Due to the extent of contamination and estimated costs for remedial strategy implementation, a phased cleanup strategy was selected. Phase I was designed to capture the migrating dissolved plume using groundwater recovery wells, while Phase II addressed LNAPL and dissolved contamination at the source area using dual phase extraction (DPE) and groundwater recovery.

Constructed in June 2011, the Phase I continues to operate today performing groundwater recovery from five recovery well locations. Four of the recovery wells (RW-1d/RW-1dd, RW-2i/RW-2d, RW-3i/RW-3d, and RW-5i/RW-5d) feature nested groundwater recovery systems in a single well, while the other two wells (RW-1i and RW-4i) are single recovery wells. Recovered groundwater is pumped back to the Phase I remedial compound where it passes through bag filters for particulate removal, a low-profile air stripper for dissolved contaminant removal through volatization, and then through bag filters and granular activated carbon (GAC) for particulate removal and final polishing. The treated effluent is discharged to an infiltration gallery located approximately 440 ft west of the groundwater recovery wells.

The Phase II remedial system design incorporates eleven recovery wells to remove LNAPL, adsorbed and dissolved petroleum hydrocarbon contamination. Five recovery wells (RW-8S, RW-13S, RW-14S, RW-15S, and RW-16S) are DPE only, while four recovery wells (RW-9S, RW-10S, RW-11S, and RW-12S) are multi-purpose operation, initially using DPE mode while LNAPL is present and then transforming to groundwater recovery for dissolved contaminant recovery. Recovery wells RW-6S and RW-7S are groundwater recovery only. During the initial Phase II operation while in the DPE mode, the recovered stream is routed through an air/water separator to bifurcate vapor stream from the aqueous flow. The vapor component is routed through a thermal oxidizer to remove volatile organic compounds, while the aqueous stream is pumped to an oil/water (O/W) separator. The O/W separator isolates LNAPL from groundwater, thereby allowing LNAPL to be skimmed off to a container for storage and subsequent disposal. Water from the O/W separator is pumped through bag filters and then to the airstripper constructed during Phase I of the project. Water is treated and disposed of as done for water recovered for Phase I.

1.1 Specification Overview

This specification details the site operating conditions and general procedures required during the execution of the project work. The Contractor shall supply all materials and labor for completing the project work depicted on construction drawings and specifications, which incorporates the main components as follows:

- Utility clearance in area of work
- Installation of two groundwater recovery wells and their associated vaults and appurtenances
- Installation of five dual phase extraction recovery wells and their associated vaults and appurtenances
- Installation of four dual phase/groundwater recovery wells and their associated vaults and appurtenances
- Trench conduit and conveyance piping to each recovery well and restore surface cover as specified
- Construct concrete slab for placement of Phase II remedial system conex
- Construct/assemble Phase II remedial system conex
- Construct additional infiltration gallery as depicted on plans
- Connect electrical power to Phase II system
- Connect Phase I system to Phase II system as designed
- Operation and adjustment of completed remedial system

Contractor is responsible for obtaining all permits, notifications, inspections and coordinating with Authorities Having Jurisdiction (AHJ). Contractor shall coordinate site activities and request technical guidance with the Owners Engineer, who will coordinate with the Lake County Representatives. All matters of project payment, insurance and other administrative related issues shall be coordinated with Lake County.

The primary guidance documents associated with the project work include the following:

- **Construction Drawings, Phase II Remedial System, Lake County Astatula Refueling Facility**, February 25, 2015
- **Phase II Remedial System Specifications**
- **Phase I Control Panel Schematics**

Other project related information is provided in the following documents:

- **Remedial Action Plan, Lake County Astatula Refueling Facility**, November 25, 2009
- **Remedial Action Plan Modification, Astatula Refueling Facility**, November 3, 2014

1.2 Submittals

- Contractor shall submit work schedule that also includes traffic maintenance plan
- Contractor shall submit site-specific Health and Safety Plan (HASP)
- Contractor shall identify subcontractors and provide their appropriate licenses

- Contractor shall submit licenses required to perform the project work
- Contractor shall submit proof of OSHA 29 CFR 1910.120 HAZWOPER initial 40 hour training and subsequent 8 hour annual refresher certifications
- Contractor shall submit pertinent proof of notifications, permits
- Contractor shall submit remedial system startup data to Owner's Engineer to assist in assembling the system As-Built Drawings and Startup Report

1.3 Warranty

No products are part of this specification so no warranty is required by this specification. However, in general, the Contractor shall be responsible for a one-year warranty of craftsmanship and material for work performed by the Contractor or work performed by any subcontractors hired by the Contractor.

Part 2: Products

No products are included in this specification.

Part 3: Execution

Contractor shall develop a site-specific Health and Safety Plan (HASP) prior to commencement of Work and submit to Owner's Engineer for approval.

Contractor shall obtain all required local, state, and federal permits or other requirements needed to complete work construction. The Contractor shall submit proof of applicable permit(s) for the Work described herein prior to commencement of work. All Work shall be performed in accordance with local, state, and federal codes, regulations and requirements.

Contractor shall submit a Work schedule to Owner's Engineer that, at a minimum, identifies labor, equipment, critical path items, and other important events.

Contractor shall submit list of subcontractors that will be used on this project and, if requested, provide documentation of licenses and insurance.

Contractor shall conduct daily meetings with Owner's Engineer to outline project safety, as well as discuss proposed activity schedule and goals for the day's Work. Standard working hours of 7 AM to 5 PM apply for performance of the Work. Contractor shall obtain approval for working non-standard hours from Owner's Engineer prior to working outside of normal business hours.

Utilities such as electric, water, and sanitary may not be available on site for Contractor's use; therefore, Contractor shall be capable of providing all utilities required to complete the Work.

All public notice notifications shall be coordinated by the Owner but the Contractor shall attend and provide information as needed.

Contractor shall develop a traffic control plan that allows entrance to the refueling station during all phases of the work. This may include routing incoming traffic with cones and barricades, placement of

steel plates, or use of flagman. In the schedule provided by the Contractor, work areas in conflict with traffic flow shall be identified and a plan to maintain access to the refueling facility be identified.

Contractor shall perform remedial system startup and adjustment for a minimum period of three consecutive days provided an operational run time percentage of 85% is achieved. If at the end of the three-day system startup the minimum operational percentage is not achieved, the Contractor shall remain on site until the operational run time percentage criteria is met which shall begin when the system operates correctly. During system startup, Contractor shall perform influent and effluent aqueous and vapor sampling and analysis in accordance with Florida Chapter 62-780.700, FAC, which shall include analytical testing confirming the remedial system is operating as designed. A minimum of three sampling events for influent and effluent air each shall be performed during the startup and adjustment period, and one sampling event for the influent and effluent groundwater. All sampling shall be conducted in accordance with State of Florida Department of Environmental Protection (FDEP) Standard Operating Procedures for the intended methods. Air samples shall be collected and analyzed by EPA Method 18, with 24-hour turn-around time. The first air sample shall be collected on the first day of operation, and the remaining two samples shall be collected with no less than 36 hours between sampling events. Groundwater samples, both influent and effluent, shall be analyzed for EPA Methods 8310 for PAHs and 8260B for BTEX/MTBE. A 24-hour expedited turn-around time is required for water sample analysis. Analysis of all samples shall be completed by a lab with current (at the time of analysis) NELAC certification for the methods being run. If analytical results for the treated media fail to meet the cleanup criteria in Florida Chapters 62-777 and 62-780 FAC, the Contractor shall collect additional samples and retest at their expense until acceptable cleanup standards are met.

In addition to the remedial system monitoring, the contractor is responsible for collecting field data to document recovery rate, pressure, well drawdown and other pertinent data to evaluate the remedial system's operational performance. At a minimum ground water elevation at the recovery wells shall be collected daily during startup, as well as instantaneous and cumulative flow for each recovery well. Contractor shall provide all remedial system startup data, field notes, measurements and be responsive to requests for additional information from Owners Engineer. Contractor shall provide red-line markups of the construction drawings and attest to their accuracy in sufficient detail that Record Drawings may be generated.

Contractor has 120 days after Notice to Proceed to achieve substantial project completion.

Contractor can stage equipment and materials in the vicinity of the Phase I remedial compound as directed by the Owners Engineer.

Contractor shall coordinate with Owners Engineer to shut down the Phase I remedial system.

Contractor shall submit to Owner's Engineer within 15 days of remedial system acceptance all data associated with remedial system startup and adjustment including monitoring parameters, settings, flow, pressure/vacuum, pump placement, detail drawing of pipe alignment, well locations, sampling details in electronic or paper copy for development of the As-Built Drawings and Startup Report for the installed remedial system. Details shall include all construction and equipment design specifications of

the active remediation system and any operational parameters different from those in the approved Remedial Action Plan.

SHOP-BUILT REMEDIAL SYSTEM

Part 1: General

The Contractor shall be responsible for complying with the equipment specifications provided herein in all aspects including but not limited to quality, delivery schedule, operational capabilities, durability, shipping, and placement. Therefore, the terms "Equipment Vender," "Equipment Manufacturer," or "Contractor" used in this specification are synonymous with the Contractor that the bid is awarded. The Owner's Engineer shall provide approval of the Equipment Manufacturer whether Contractor self-performs or subcontracts the equipment manufacture. Contractor shall coordinate site activities with Owner and/or Owner's Engineer. The Contractor shall select an equipment Vendor who can provide the remediation package as a complete system.

1.1 General Information

This specification package details the fully assembled, shop-built, new remedial system as depicted on the Phase II Remedial System Construction for Lake County Astatula Refueling Facility drawings. Note, all equipment specified herein is to be purchased except for the thermal oxidizer which shall be a rental unit. Equipment Manufacturers' shall have a minimum of 10 years of documented, verifiable experience in the manufacture of remediation systems. The equipment vendor shall furnish a system enclosure containing described equipment that has been fabricated by a nationally recognized testing laboratory (NRTL) certified fabrication facility. The system shall be shipped fully certified as a whole including a control panel that has been built in a UL 508A and 698A compliant facility and shall display a certification decal inside the panel enclosure. The certification for the system must be specific to groundwater remediation systems. At a minimum, the system shall be UL73 and NFPA 70 certified prior to shipment to the site, as field certification evaluations are not acceptable. The Contractor shall provide a copy of their certification letter/report with their quotation.

The Contractor is responsible for equipment shipping, applicable taxes, security, storage, ground preparation, and slab construction where the equipment is placed. The Contractor shall be responsible for unloading and installing the prefabricated system on the concrete slab. The Owner will assist with coordinating electrical and cellular telemetry service to the remedial equipment. Contractor shall be responsible for locating utilities in the area of work and shall be responsible for repair of utilities if damaged by the work.

1.2 Submittals

Contractor shall submit sales drawings and/or catalog cut sheet required for the installation and operation of the equipment. Contractor shall provide a full engineering submittal package from the equipment vendor that details the vendors General Arrangement drawings and P&IDs. The package shall include all drawings and all major components in the system, as well as a **Sequence of Operations** for the entire system. Contractor shall provide interlock logic schematic as part of bid submittal. Once the bid is awarded to the Contractor, shop drawings of the remedial system enclosure, component layout, panel layout, piping and wiring routing shall be submitted for approval prior to

commencement of fabrication. These drawings shall be accurate in detail and shall contain all information necessary to relate the equipment to the specifications. Any deviations from the specifications must be approved by the Owner's Engineer prior to shipment to the site. Bid submittals that contain insufficient product information to evaluate the equipment's compliance to this specification shall be rejected as nonresponsive to the request for bid and re-submittal denied.

The Vendor shall supply three bound hard copies of the system O&M manual. It is expected that the system manual shall be grammatically correct and that the manual shall thoroughly explain the system operation in detail with troubleshooting guidelines. The manual shall include tables that document all major system, instrumentation, and control components in detail. Model numbers, serial numbers, quantities, and spare part model numbers shall be provided. All manufactured component sub manuals shall be included with the manual. The expectation of a concise and accurate manual will be reviewed and funds shall be withheld until the supplied manual is accurate and of high quality.

1.3 Warranty

All products shall be covered by a one-year warranty from manufacturers' defects. All services rendered shall be warranted for one year to be free of defects in craftsmanship. The Contractor shall be responsible for all warranties of craftsmanship, both for work that the Contractor performs and work performed by any subcontractors hired by the Contractor.

Part 2: Products

The product shall be a pre-fabricated and fully operational multi-phase extraction (MPE) remedial system enclosed in a conex box. The remedial system shall be delivered to the site. Following installation, proper operation shall be ensured. The system shall include the proper enclosure, equipment, piping, instrumentation and electrical, controls as specified in the construction drawings and outlined in this document.

2.1 System Enclosure

2.1.1 Enclosure Type

The system enclosure shall consist of a single use or new standard size sea box (conex). The outside of the conex shall be free from rust, dents and have a like new coat of paint on the exterior. The conex shall be a hi-cube conex with dimensions 8 ft W x 40 ft L x 9 ft H. The floor and walls of the conex shall provide adequate insulation for operation of the equipment during winter months and for suppression of the equipment operating noise. The exterior of the conex shall be fully painted with a uniform neutral gray or beige color as designated by the Owners Engineer. All modifications shall be epoxy primed and finished with a durable semi-gloss finish of uniform consistency. The conex shall be studded with metal studs and shall have a ½-inch sheetrock finish throughout. The interior stud spaces shall be fully insulated throughout. The Equipment Manufacturer shall provide a minimum of 20 digital images depicting the installation of the studs, insulation, and sheetrock. The sheetrock shall be finished, sanded smooth, and painted with two coats of a high quality latex paint. The interior walls shall be fully insulated and covered with a white water-resistant hardboard and there shall be a fully gastight seal

between the process and the control room. The interior of the process room shall have an acoustical insulation and performance level for noise of 70 dB at 10 ft from the conex while all equipment is operating. Documentation of the testing must be provided in writing at the time of system delivery. Finished wood products are not allowed nor are walls allowed to be fabricated from wood studs. Vendor shall provide high definition images of the enclosure and system assembly. This shall include all interior wall assembly, insulation, and equipment installation into the system. Any concealed components or devices shall be documented to exact locations. All images shall be provided on portable data storage device.

2.1.2 Enclosure Separate Room Requirements

The conex shall be separated into two compartments: the first compartment shall be the process room where all equipment and apparatuses will conform to the national electric code (NEC) Class 1 Division 2 requirements for hazardous locations; the second room will be the control room and shall contain the system control panel. The control room shall be unclassified. The equipment vendor shall install electrical conduits in accordance with applicable codes. All controls shall be accessible from the access locations.

2.1.3 Enclosure Accessibility and Climate Control

The conex shall include double rear doors and at least one 3-ft wide side door. A partition wall shall separate the process room and the control room. The control room shall be located, at a minimum, within the forward 5 ft of the conex and will contain the electric control panels and the equipment that does not process potentially explosive vapors. Penetrations between the control room and the process room shall be sealed to prevent potentially hazardous vapors from entering the control room.

The control room of the conex shall be a conditioned space and shall be heated and cooled with an energy efficient 18,000-BTU mini-split system. The mini-split shall be designed to operate for dehumidification purposes as well as temperature control. Wall-mounted AC units are not acceptable. The cooling/heating fan shall be installed in the control room and the compressor shall be mounted outdoors. The mini-split shall be charged and made operable by the Vendor.

The control room shall have interior lighting using strip LED lighting to provide sufficient light for a conventional working environment. The light shall be installed on a light switch. The process room shall have a minimum of four Hazardous Location lighting fixtures, each at least 48-inch fluorescent bulb style.

The conex process room shall be vented with an explosion-proof forced air system sufficient to keep equipment cooled to within manufacturer recommendations. A minimum 24-inch fan is recommended with proper OSHA safety guards. The fan shall be thermostatically controlled and the temperature monitoring shall be linked into the PLC for remote monitoring.

2.1.4 Enclosure Secondary Containment Requirements

The floor of the conex shall serve as secondary containment for the remediation system. A leak-proof epoxy liner shall be applied to the floor and walls of the conex to create a minimum of 2 inches of

containment. A floor sump shall be installed to house a conductivity sensor which will alarm and will cause the system to shut down when a leak is detected.

2.1.5 Enclosure Electrical Requirements

The conex shall be wired to equal or exceed requirements set by the current edition of the national electric code (NEC). All copper conductors for motor feeds shall be oversized by one wire gauge. Conduit within the process room shall be rigid with explosion proof junction boxes and seal offs. Low voltage instrumentation wiring shall be contained inside of conduit where it can be re-installed back to the control panel if required. Low voltage instrumentation wiring shall not share conduit space with high voltage power supply wire unless approved by the Owners Engineer.

Since this site has historically experienced lightning-related problems, extra measures shall be employed to mitigate lightning-related damage. The equipment vendor shall provide supplemental grounding for the conex which will include, but is not limited to, 3/0 THHN copper conductors that encompass the perimeter and both sides of the conex. The conductor length shall be 100 linear ft at a minimum. The conductor shall be bonded to the conex at a minimum of 5-ft intervals. The conex doors shall also be bonded.

The equipment vendor shall supply four ¾-inch x 10-ft copper ground rods that will be installed by the onsite Contractors. The equipment vendor shall provide a 10-ft piece of 1/0 copper conductor that is attached with a CADWELD to the 3/0 copper conductors at each exterior corner of the conex. The ground cable shall be field welded by the site Contractor to the ground rods that are supplied loose.

All motors installed in the hazardous location shall be provided with a factory nameplate of Class 1, Division 2 Hazardous Location. Motors shall be UL listed.

2.2 Remedial System Equipment

2.2.1 Vacuum Pumps (2)

Two Sutorbilt® Legend® DSL, model 6V series or approved equal, rotary lobe vacuum pumps shall be supplied by the equipment vendor. Each vacuum pump shall be capable of producing 225 standard cubic feet per minute (scfm) of air at approximately 15 inches of mercury vacuum. Each blower will be equipped with an outlet discharge silencer properly sized for the blower's performance. Each vacuum pump is to be supplied with an auto-oiler system that will inject up to 2 ounces of Fluid Film protectant into each blower once per week. Each auto oiler system shall be provided with needle valves and solenoid valves for automatic operation. Additional minimum specifications are as follows:

1. PD blowers shall be direct drive as these systems are more energy efficient; hence, belt driven systems are not acceptable. Each blower shall be supplied full with synthetic oil. The blower frame shall be a heavy duty carbon steel design painted or other type of protective coating and warranted for stresses generated during operation.
2. All blower discharge process piping shall be carbon or stainless steel (ss). Aluminum piping shall not be used.

3. Thermoplastic OSHA approved coupling guards shall be fitted to each machine as applicable to prevent finger access to the couplings and/or any other moving pinch parts.
4. PD blowers shall each be operated by variable frequency drives (VFD). The VFDs shall be controlled by the system control panel and shall operate the PD blowers individually or combined. VFDs are required to be installed inside a control panel within a climate controlled environment. Air conditioning shall be sized to remove 150% of the BTU loading of the VFDs or have a minimum temperature rating of 50 degree C and fan ventilated.
5. An automatic vacuum relief (VRL) valve shall be installed on the influent side of the system which shall open at 17 inches mercury (in. Hg) vacuum. The VRL shall be designed to prevent the blowers from experiencing deadheading conditions. The VRL shall include a suction side filter/silencer.
6. A 4-inch diameter temperature gauge shall be installed on the discharge of each vacuum blower.
7. Each blower shall have 4-inch isolation valves on the inlet and discharge of each blower for complete isolation as required.
8. Two flowmeters shall be installed on the suction side of each SVE blower. The flowmeters shall be scaled for an individual range of approximately 60-600 scfm and shall be provided with the appropriate conversion charts for flow based on correction factors of vacuum. Differential gauges with orifice plates are not allowed. The flowmeters shall be Mercoid 3100 series Explosion-proof differential transmitters with Dwyer DS-300 pitot tubes. The units shall provide a scaled 4-20mA output to the PLC system for monitoring and data logging. All instrumentation tubing shall be SS tubing. **Flexible thermoplastic tubing shall not be allowed.**
9. The inlet header feeding into the remediation system shall be a 6-inch HDPE or stainless steel inlet header and shall include individually controlled/modulated legs that are designed to control vacuum to each leg. By design, the system will have the need to control vacuum levels at each point to create the desired effect in that individual recovery well. The header shall be a fabricated assembly designed to operate at full vacuum. The header shall be fabricated from round piping.
    - Each leg of the header shall be 2-inch piping and each pipe shall extend neatly through the side wall of the container.
    - Each leg shall be terminated with a standard 150# rated flange.
    - Penetrations through the container shall be neatly caulked with a UV rated elastomer. No silicon or latex caulk.
    - Each leg shall include a 2-inch modulating ball valve that is controlled by a pneumatic ball valve. The valve assemblies shall be stainless steel body with SS ball and PTFE seals. The pneumatic valve shall be controlled by a 24VDC solenoid valve wired to the PLC system. The PLC system shall allow the user to not only control vacuum set points

but shall also allow for zone control by having a 24-hour repeatable timer for each leg. Timer shall allow for up to four intervals of on/off per day.

- A vacuum transmitter shall be installed on the downstream side of the leg prior to leaving the enclosure. The transmitter shall be intrinsically safe and shall provide a 4-20mA signal to the PLC that will allow the user to select an applied operating vacuum set point, which in turn will modulate the valve to control the desired applied vacuum.
- Each leg shall have a 12-inch long clear Schedule 80 PVC pipe stub that is mounted with Proflex connectors for ease of cleaning.
- Each leg shall have a 0-30 in. Hg back mount liquid filled stainless steel vacuum gauge.
- Each leg shall have a labcock sample valve with viton seals and hose barb connection.
- A single vacuum gauge shall be installed on the header.
- A 5-HP reciprocating air compressor shall be installed in the control room whose sole purpose is to supply compressed air for modulation to each of the individual actuated valves. 300 psig instrumentation tubing shall be supplied to the actuators. A single inline ½-inch general purpose solenoid valve shall be installed to isolate the entire air supply to the valves. The compressor shall be outfitted with regulator and two-stage filtration. The compressor tank shall be outfitted with a timer based auto drain valve assembly as well as the filter modules.

2.2.2 Particulate Air Filter

A particulate air filter shall be installed on the intake line of the vacuum blowers prior to the inlet of the moisture separator. The filter housing shall be 304SS and shall include a differential magnehelic gauge installed across the inlet and outlet of the housing to identify filter pressure drop. The magnehelic gauge shall be connected with SS tubing using Swagelok style fittings. No plastic tubing allowed.

2.2.3 Dilution Valve

A dilution valve assembly utilizing a gate valve with a filter/silencer shall be included as part of the system. This valve assembly shall include an inline air flow meter to monitor dilution air flow into the moisture separator. The flowmeter shall be a 2-inch Rotameter scaled to 100 scfm at atmospheric conditions.

2.2.4 Moisture Separator

A moisture separator (MS) with a minimum capacity of approximately 300 gallons shall be installed to remove moisture and free liquids from the air stream prior to entering the vacuum pumps. The MS shall be capable of withstanding a pressure of 28 inches of mercury vacuum and shall be ASME style design with domed lid. The MS shall be constructed of 304 or better stainless steel. **Aluminum or Carbon Steel MS tanks are not allowed**. The MS shall contain one tangential inlet opening, one demister element, one air discharge opening, a 1-inch diameter bottom drain with ball valve, one 6-inch manway port located at the bottom of the tank for cleanout and one liquid discharge opening. The moisture separator shall also be constructed with a demister element that must be easily accessible. The

moisture separator shall be equipped with a sight glass and electronic float stem assembly for level control. Level controls shall include low level (pump off), high level (pump on) and a high-high level (system shutdown) using 316 SS floats and shaft. The high-high level shall be connected to the Phase II control panel interlock circuit to shut down the recovery operation. The level switch shall be mounted on an easy to remove camlock assembly for ease of cleaning. The maximum groundwater influent rate is anticipated not to exceed thirty gallons per minute (gpm). A 4-inch-diameter SS Temperature Gauge shall be installed in the sidewall of the MS tank to identify incoming vapor temperatures

2.2.5 Progressive Cavity Pump

A progressive cavity pump shall be installed to transfer recovered fluids from the MS to the oil/water (O/W) separator. The progressive cavity pump shall be capable of pumping 0 - 30 gallons per minute (gpm) and withdrawing fluids from the moisture separator under of 28 inches of mercury vacuum. A Moyno 500 series pump, model 36701 with a Viton stator or approved equal is recommended. Contractor shall provide documentation the stator is Viton. The pump shall include a bypass discharge line that returns to the Moisture separator tank. An isolation valve shall be installed on both the inlet and outlet side of the pump. A 100 psig stainless steel, liquid filled pressure gauge and sample port shall be installed on the discharge of the pump.

2.2.6 Equalization Tank and Oil/Water Separator

A 500-gallon single wall, steel equalization storage tank 4-ft diameter by 5 ft 5 inches high shall be installed inside the conex to maximize pre-separation. All connection points below the water level shall be factory installed spin weld fittings to prevent potential for leaks. The tank shall have an overflow pipe that forces all liquids to flow on top of the water level in the tank into the O/W Separator. The tank shall be fabricated from mild carbon steel with a flat bottom head and top. Bottom head, shell and top steel gauge thicknesses per UL-142. All items included in tank unit shall be coated with red primer. The tank unit shall be manufactured in conformance with Underwriters Laboratories' UL-142 specifications and so labeled. The tank will have an integral high level interlock float. Vendor shall provide all hose and wiring from the system to the tank. Site contractor shall perform the installation.

An O/W separator shall be installed to remove light non-aqueous phase liquid hydrocarbons (LNAPL) from the groundwater prior to further treatment. The O/W unit shall be rectangular in shape and constructed of either fiberglass or stainless steel or other suitable corrosion resistant material. O/W unit shall be configured of three or more sections that include; an initial settling chamber suitably sized, coalescing media and LNAPL recovery section, and post treatment chamber. The height of the O/W unit shall not be over 5 ft from the floor unless a built-in scaffold is included. Scaffold shall be of sufficient height, length and width to allow operation & maintenance (O&M) to be performed on the unit. The O/W shall have a vapor tight lid that easily locks in place and allows cover to be lifted/removed for interior access. The O/W separator shall be sized for a flow of at least 40 gpm and shall utilize a matrix of vertically positioned oleophilic polypropylene coalescing media to aid in separation of LNAPL. The O/W separator shall be equipped with an electronic level controls including low level (pump off), high level (pump on) and a high limit (system shutdown). An adjustable skimming tube shall collect the

separated LNAPL and gravity drain the liquid flow to a vented 200 gallon product storage container that has a high limit switch connected to the control panel interlock (system shutdown).

2.2.7 Product Storage Tank

Skimmed product shall be containerized in a double wall product storage tank rated as UL 142 approved. The product storage tank and shall include two 48-inch vent pipes that are turned downward using tee fittings. The product tank shall have a high level alarm that is connected into the PLC logic controls so that the remedial system components providing LNAPL shall be switched off.

2.2.8 Particulate Bag Filter Housing

The Equipment Manufacturer shall supply two particulate bag filter housings to remove suspended solid particles from the incoming groundwater. Bag filter housings must be a minimum or 304SS. The first bag filter housings shall be installed at the discharge of the oil/water separator transfer pump prior to discharge to the existing air stripper. Filter Specialists Inc. Model BFN 12, or equivalent, is required. Additional minimum specifications are as follows:

1. Each filter housing shall have its own air vent.
2. Drain valves shall be plumbed to the exterior of the conex system and terminated with a 1" camlock cap.
3. Inlet and outlet connections shall include 2 inch diameter schedule 80 PVC true union ball valves with Viton seals.
4. Bag Filters shall be plumbed in parallel so filter can be replaced while the system is in operation.

2.2.9 Centrifugal Transfer Pump

A centrifugal transfer pump shall be provided to remove liquid from the oil/water separator transfer sump. The transfer pump shall be a Myers CT20 2HP pump or approved equal that is capable of providing the same operating characteristics. The pump shall have a mechanical shaft seal made of Viton and the impeller shall be brass. Contractor shall provide two spare Viton Shaft seals with the system.

2.2.10 Totalizing Flow Meter

An electronic totalizing flow meter shall be installed inline after the O/W separator transfer pump. The flow meter shall be a Signet inline Mag meter, or approved equal, stainless steel internal parts and an electronic transmitter. The flow transmitter shall be intrinsically safe. A remote display for the totalizer shall be included in the control panel.

2.2.11 Vapor Phase Catalytic Oxidizer

It is anticipated that vapor treatment will not be required beyond six months of startup of the Phase II remedial system; therefore, the Equipment Vendor shall provide a skid mounted thermal/catalytic oxidizer rental unit capable of removing volatile organic compounds (VOCs) from the effluent air stream. The oxidizer shall use propane gas to supplement the thermal process stream. The oxidizer will include a vapor control valve (VCV) for controlling the concentration of VOCs within the influent

stream in order to control the temperature of oxidizer. The oxidizer shall have a maximum design vapor flow rate of 1,000 scfm with a destruction efficiency of 99.9%. The oxidizer shall be integrally controlled by the system control panel. The Equipment Vendor is to provide pricing for a minimum 6-month lease in their bid

Additional minimum specifications:

1. The oxidizer shall have UL listed NEMA 4 control panel with Hi Visibility Temperature controllers.
2. The oxidizer shall operate using gas.
3. Equipment vendor must have a minimum of 10 years' experience in the manufacture of thermal oxidizers.
4. The oxidizer gas train must be national fire protection association (NFPA) compliant with double blocking gas valves.
5. The oxidizer shall include an inline process blower capable of providing -10 inches water column (in. W.C.) draft induction and +10 in. W.C. positive pressure.
6. The oxidizer shall have two control valves. One control valve shall be a minimum of 4 inches diameter gas blocking valve and one control valve shall be a minimum of 4-inch diameter modulating valve. The modulating valve shall actuate for bleed air.
7. Onsite Contractor shall be responsible for all piping from the exterior of the Phase II system to the oxidizer including electrical and vapor piping. The Vendor shall specify the required wiring and communications cabling and shall terminate the communications cabling.
8. The Vendor shall provide a branch circuit for the oxidizer.

2.2.12 System Spare/Accessory Parts

Vendor shall include the following items with the remedial system, in the quantities indicated.

1. Two gallons of full synthetic rotary lobe blower oil
2. Two tubes of high temperature synthetic bearing grease for the blowers with grease gun.
3. One 5-gallon container of Fluid Film protectant
4. Two spare Solberg filter elements for the filter between the MS tank and the vacuum blowers
5. Two spare Solberg filter elements for the dilution air valve on the MS tank.
6. One spare Float Stem for the Moisture Separator Float Level switch
7. One spare Float Stem for the OWS Transfer Sump Float Level switch
8. Two spare Intrinsically Safe Barrier Relay modules
9. Five complete replacement fuses for all single trip fuses in the system

11. Five spare 0-30"HG SS liquid Filled gauges
12. One spare CU300 recovery pump controller/programmer with a single IR programmer module

2.3 Remedial System Piping

The remedial system piping shall be supplied and installed as shown on the process and instrumentation diagram (P&ID) provided in these specifications. All piping will be labeled with directional arrows. All water carrying and vacuum side process piping shall be schedule 80 PVC and all piping seals shall be Viton or PTFE. All liquids carrying pipe up to the Oil Water Separator shall be HDPE or SS. All vapor handling equipment on the discharge of the vacuum system shall be schedule 40 galvanized steel piping.

1. The influent piping connections from the extraction wells, for influent vapor and groundwater, shall be made through the sidewall of the conex.
2. The remediation system shall have two influent manifolds to collect influent from up to nine DPE recovery wells and up to six groundwater recovery depending on the operational configuration at that time. The DPE manifold shall be constructed from 4-inch diameter HDPE, SDR 11, PE 4710 or SS pipe or other approval equal as depicted on the project construction drawings. The groundwater recovery manifold shall be constructed from 6-inch diameter HDPE, SDR 11, PE 4710 or SS pipe or other approval equal as depicted on the project construction drawings. Contractor shall provide a sketch describing the manifold design, material and operating pressure for approval.
3. The inlet pipe from each extraction well shall include a back-mounted vacuum gauge manufactured of stainless steel and brass with a scale from 0 to 30 inches mercury and a gate valve.
4. The remediation system shall have one liquid drain valve for the moisture separator and shall be plumbed to the exterior of the conex.
5. The remediation system shall have one process pipe from the moisture separator to the vacuum extraction blowers.
6. The remediation system shall have one dilution air valve to reduce the vacuum on the extraction wells, air flow meter, and filter.
7. The remediation system shall have one air discharge line with a sample port from the vacuum extraction blower. The air discharge from the extraction blowers shall exit through the sidewall of the conex and have a discharge flange and support system such that a ten-foot high discharge stack and silencer can be added. The discharge stack shall contain a "T" fitting and a gate valve for proper connection to the oxidizer for air treatment, as required. The extraction blowers shall have suitable excess static pressure to allow for operation with the additional stack length or air treatment via catalytic oxidizer.
8. The remediation system shall have one process pipe from the moisture separator to the first transfer pump.

9. The remediation system shall have one process pipe with a ball valve, sample port, and check valve from the first transfer pump to the equalization tank.
10. The remediation system shall have a process pipe from the equalization tank to the oil/water separator that will gravity drain.
11. The remediation system shall have one flexible recirculation line with a gate valve from the first transfer pump to the moisture separator.
12. The remediation system shall have one process pipe from the oil/water separator sump to the second transfer pump to deliver water through the particulate filter and to an existing air stripper. A check valve, gate valve and sample port shall be installed following the pump.
13. The remediation system shall have one process pipe from the oil/water separator to the LNAPL storage tank.

2.4 Remedial System Instrumentation

The remediation system measurement instrumentation shall include the following equipment and be based on the P&ID provided in these specifications:

1. Vacuum gauges: there shall be a total of nine liquid filled vacuum gauges located at the extraction well manifold, one at the moisture separator, one prior to the inline air filter, and one after the inline air filter. Vacuum gauges shall be liquid-filled and rated for 0 to 30 inches of mercury vacuum. Each gauge shall be permanently mounted to display the gauge face from the typical vantage point.
2. Six liquid-filled pressure gauges: one located after each of the two transfer pumps and two for each of the particulate filters. Each gauge shall be permanently mounted to display the gauge face from the typical vantage point.
3. One vacuum transducer (Rosemount 3051C or equal) for the vacuum pumps.
4. Four electronic pressure transducers - one located after each of the two transfer pumps.
5. One temperature gauge for the vacuum pump air discharge.
6. Differential pressure gauges or air flow meters: one for the vacuum pump discharge and one for the dilution valve airflow.
7. Two electronic flow rate meters (Intrinsically safe Signett Mag meters with local display at PLC and 4-20mA output to PLC for totalization in PLC) with local display after transfer pump #1 and transfer pump #2.
8. Hour meters for the vacuum pump, stripper blower and three transfer pumps.
9. A SS float switch assembly for the moisture separator that includes low level (pump off), high level (pump on), high-high level (system shutdown) controls.
10. A float switch assembly for the oil/water separator sump that includes low level (pump off), high level (pump on) and a high limit (system shutdown) controls.

11. A SS float switch assembly for the LPH storage tank that includes one high limit switch.
12. A SS float switch assembly for the equalization tank that includes one high limit switch.
13. A SS float switch assembly or conductivity switches for the floor.
14. A differential pressure transmitter to cease system operation due to excessive bag filter pressure. (10psig)
15. A lower explosive limit (LEL) switch within the process room to cease the operation of the system due to the presence of explosive vapors. The unit shall be locally programmed with an alarm output only. The LEL meter shall be provided with a field calibration kit including gases.
16. A solenoid vacuum relief valve (interlocked with the moisture separator high-high level and low level switches) to be mounted on the moisture separator or in line prior to the vacuum pump.
17. Each influent recovery well leg shall include and ISTEC flow totalizer with Intrinsically Safe pulse output to the PLC for counting total flow from each recovery well. The ISTEC shall have Viton Seals. A 20gpm Rotameter shall be installed inline for visual indication to the operator of instantaneous flow from the recovery well.

The vacuum pump(s), moisture separator, equalization tank, transfer pumps, and the oil/water separator shall be interlocked for optimal performance. The system shall be controlled by using a programmable logic controller (PLC) with software to view and access the remediation system equipment operation remotely. A Siemens PLC unit is recommended. The telemetry unit shall provide data including water flow rate and totalizer data as well as vacuum and pressure data and oxidizer operational status.

All transmitters shall transmit a 4-20mA signal to the PLC for monitoring and control purposes

2.5 Remedial System Electrical

The electrical control panel controlling the remedial system shall be UL approved. The electrical distribution, instrumentation, and control components shall be mounted in a NEMA 4 enclosure inside the front control room. This enclosure shall be both weather and tamper proof but not explosion proof. The remedial system electrical requirements are as follows:

1. A Single Electrical load center shall be required which provides all branch circuit protection to the system. The load center shall be a 200 amp main breaker 480V 4 wire NEMA 1 load center installed in the electrical control room. The load center shall house all additional circuit breakers for all other devices. All motors must have their own distinct circuit breaker with lock/out tag out provisions for each motor, no exceptions allowed to this requirement. Motor protector switches shall not be allowed in lieu of a circuit breaker. The load center shall include a minimum of 25% spare spaces. Load center shall be labeled properly. If a panel board is not available with the adequate positions, then the vendor shall provide and prewire a subpanel for the additional spaces.
2. All equipment inside the process room will conform to National Electric Code Class 1, Division 2 requirements for use in Group D atmospheres and the control panel will conform to UL 698A,

industrial control panels relating to hazardous (Classified) locations. The equipment vendor shall install electrical conduits in accordance with applicable codes.

3. A fused main disconnect shall be provided outside the conex along the 8-ft wall against the control room. The disconnect shall be a Heavy Duty ABB brand disconnect and rated for 200Amp, 600VAC, 3 phase and shall include a neutral-bar whether it is required for use or not. The power disconnect shall include 200-Amp 3-phase time delay fuses and wiring from the disconnect load side shall be installed to the main breaker panel inside the control room. An oversized (#1 gauge copper minimum) and isolated grounding conductor shall be installed from the power disconnect to the main system control panel. The vendor shall ensure that a #1 copper grounding conductor enters the disconnect switch and is bonded to the system grounding ring which is integral to the system.
4. The control panel shall contain all necessary fuses, starters, contactors, normally open and normally closed auxiliary contacts for each motor, and wiring locations (terminal strip). All motor starters, liquid level controls and alarms shall be interconnected into a Siemens PLC unit with battery backup and wireless terminal install.
5. The control panel shall include a locally mounted remote display for the flow totalizer. The instrument shall transmit instantaneous and total flow to the system PLC.
6. The equipment vendor shall provide explosion proof lighting inside the process room to allow for adequate visibility while servicing the system. A minimum of 5 explosion-proof light fixtures shall be installed. No incandescent bulbs allowed.
7. The equipment vendor shall provide two standard lighting fixtures inside the system control room to provide proper lighting. No incandescent bulbs allowed.
8. Four GFCI protected convenience receptacles shall be installed in the control room.
9. The load center, control center and all devices shall be dielectric tested once fabrication is completed. A testing report must be provided.

2.5 Remedial System Controls

1. System vendor shall have a minimum of 10 years' experience in designing control panels for remediation systems and shall have integrated systems with a minimum of 50 Siemens PLC/SCADA based systems.
2. Control panel shall be a UL listed Control panel. Listing shall be for UL508A and UL698A.
3. The panel shall have a minimum rating of NEMA 4/12 and shall have the HMI mounted on the front door panel.
4. The control panel shall be controlled by a Siemens Programmable PLC which is programmed in the latest version of Portal TIA (v13). Step 7 not allowed. PLC shall be a Simens PLC such as 200 or 300 series up to 1200. A Color 10" HMI Comfort series touchscreen shall be supplied with the system and shall include all local operator interfaces.

5. The PLC system shall be supplied with **redundant** 24VDC power supply that is designed to have a minimum of 4 times safety factor for amp capacity (i.e., if the maximum load on the 24VDC system is 5amps, then the system shall provide up to 20 Amps of capacity minimum).
6. Vendor must provide three 16 GB memory storage USB cards with the system.
7. System must include a 3-phase power protection monitor that is adjustable. The control system must be interlocked with the alarm.
8. System shall have an integrated 3-phase surge suppression system that is interfaced into the main distribution system. The package must be a factory assembly housed in a separate NEMA 4 enclosure. The system must actively monitor and display the protection of all 3 phases and indicate if an MOV is defective or blown out. The system shall have replaceable MOVs, and shall have a minimum surge rating 185,000 Kaic.
9. All wiring inside the control panel for loads shall be oversized by one gauge size.
10. The Equipment Manufacturer shall supply a supplemental remote IO module or modules as required that shall allow the vendor to incorporate all control of the existing system into the current control panel in the groundwater treatment building. The vendor shall supply a remote slave HMI that mimics the HMI in the DPE system. The Equipment Manufacturer shall be responsible for providing certified technicians onsite to provide the up-fit and interfacing of the existing panel. The vendor shall provide 250 ft of Profibus or ethernet cable to interconnect the two systems. The interconnect shall be installed by the site Contractor but terminated by the Vendor. The Vendor shall terminate the two ends prior to startup. The Contractor is responsible for full integration of these two panels. Interlocks shall be designed to provide safeguards against impact to the environment and personnel safety; however, one detected fault does not require complete system shutdown.
11. The Equipment Manufacturer shall provide a wireless communication package for the control panels. The package shall include a business class network router, a 4G High speed compatible modem, an outdoor High Gain mast mounted Antenna package (with mast) and 25 ft of cabling. The Vendor shall be responsible for all fittings to install the system. The Vendor shall handle all networking and service requirements for the telemetry and shall provide the system with an initial 2 years of service where the end user is not responsible for any invoicing in the first 2 years of use. The Vendor shall provide an estimate for continued service after year two.
12. The Redi-Flo 3 Groundwater pump controls shall all be incorporated into the Phase II main control panel.
    - Each groundwater pump shall have the ability to be controlled through the HMI
    - Each pump shall have its own branch circuit from the load center
    - Each pump shall have its own contactor for control. The coil voltage shall be 24VDC

- The integrator shall provide a CU300 and a "programming" contactor for each pump that is fed through the CU300. The HMI shall be programmed to allow the user to select a programming mode for each pump. This will engage the programming contactor to the CU300. Only 1 pump shall be able to be programmed at a time
- Each groundwater pump shall be interlocked to electrically disconnect when a fault is registered in the airstripper
- A spare CU300 controller shall be provided with the system in the factory new box.

Part 3: Execution

Remedial System Startup and Delivery

1. The conex system will be operated and tested in the equipment vendors shop for a minimum of six hours before delivery to the site. Each interlock condition shall be tested for proper operation.
2. The equipment vendor shall deliver the remediation system to the project site after coordination with the Owners Engineer.
3. Contractor shall place conex centered on concrete pad and shall secure the unit to ground in accordance with the Florida Building Code for wind loading
4. The remediation system shall be readily operable upon delivery after site connections for electrical power, inlets, and discharges are connected.
5. Three copies of an operation and maintenance manual shall accompany the equipment and include "as built" construction drawings, bill of materials and replacement parts information, color photographs of system components, specification sheets for all parts, manufacturer maintenance instructions, identification of all input and alarm set points, PLC site file documentation and detailed electrical schematics for the system.
6. The equipment vendor shall provide three days of on-site service for system startup to ensure all components operate properly and are properly calibrated. During system startup each interlock shall be tested for proper operation and communication to the respective component. Pricing for these services shall be included in the bid.

SUBMERSIBLE PUMPS AND CONTROL MODULES

Part 1: General

1.1 General Information

This specification details the type, model, configuration and installation of submersible pumps, their control modules, other appurtenances. Contractor shall field adjust conveyance discharge hose, securing wire and electrical leads to permit pump operation and maintenance. Contractor is responsible for proper setup of pump and appurtenances.

The Contractor shall supply all six submersible pumps including electrical leads, pump centralizers, conveyance hose, and any other appurtenances required for safe operation. The complete pump assemblies shall be installed inside all six recovery wells as shown in the project construction drawings. Recovery wells RW-6S and RW-7S will operate at the pump rate as designed, while the remaining four submersible pump packages specified for installation at recovery wells RW-9S, RW-10S, RW-11S, and RW-12S will operate at a recovery rate of only 2 gpm. The pump electrical/control leads and safety/hanging cables and clamps shall be supplied by the Contractor and installed as shown in the project construction drawings and approved by the Owner's Engineer. The specified pumps require a control module for programming; however, continuous inline communication to the submersible pumps is not required for proper operation. Since these units have historically been susceptible to electrical surges, the control module will be included in the control panel, which is outlined in a separate control panel specification.

In addition, Contractor shall supply three replacement pumps for existing groundwater recovery system. Contractor is not responsible for installation of these three submersible pumps.

1.2 Submittals

The Contractor shall submit such drawings and/or catalog cut sheet required for the installation and operation of the equipment. These drawings shall be accurate in every detail and shall contain all information necessary to relate the equipment to the specifications.

1.3 Warranty

All products shall be covered by a one-year warranty from manufacturers' defects. All services rendered shall be warranted for one year to be free of defects in craftsmanship. The Contractor shall be responsible for all warranties of craftsmanship, both for work that the Contractor performs and work performed by any subcontractors hired by the Contractor.

Part 2: Products

2.1 Shallow Aquifer Pumps Groundwater Pumps

Contractor shall provide six (6) Grundfos submersible pumps, model RediFlow3 model 22RF3-140, coupled to a ¾-HP, 230V, single-phase motor. The three replacement submersible pumps shall be REDI-FLO 3 model 22SQE-210NE equipped with a 1 ½ horsepower motor and provided with 100 feet

Tefzel lead wire assembly. The securing wire and conveyance hose for these three pumps are already at each respective recovery well. No additional equipment or appurtenances associated with these three submersible pumps is required in this bid.

Information specific to the shallow aquifer submersible pumps is as follows:

- A single Grundfos controller, Model CU300 shall be included in the control panel which will provide programming to the submersible pumps. Additional guidance for this unit is provided in the specifications for the remedial system control panel.
- Six 5-ft sections of Kflex electrical conduit with two 90-degree connectors
- 316 grade stainless steel 1/8-inch-diameter support cable with all accessories. The contractor shall check to make sure the weight of the pump is on the securing cable and not the discharge hose. All supporting connectors such as thimbles and wire rope clamps shall be corrosion resistant stainless steel.
- 30 ft of Tefzel cable to the surface. Site contractor will terminate the recovery pump's electrical feed in an explosion-proof junction box.
- Contractor shall provide 1½-inch-diameter petroleum resistant Goodyear Horizon hose or approved equal that shall thread directly into the submersible pump outlet and into the pitless adapter. Submersible pump conveyance hose installed in recovery wells RW-6S and RW-7S may require a hose length of approximately 40 ft since the hose exits out of the top of the well for connection. The hose for these two wells shall use a noncorrosive/nonabrasive guide to route the hose out of the well. Hose length for RW-9S through RW-12S should be approximately 36 ft based on the 35 ft below grade pump placement. However, the contractor shall determine the proper hose length that will place the submersible pump at 35 ft bg, allow pump weight to be held by securing cable, and not have hose kinking or pinching or hinder connection if length is too short.

Part 3: Execution

3.1 Submersible Pump Installation

Submersible pumps shall be installed by the Contractor into the recovery wells as shown in the project construction drawings. Flexible hosing of the same size as the pump discharge shall be used exclusively inside the recovery wells themselves, to transition to rigid piping no sooner than indicated on the construction drawings. All metal parts in the well or vault shall be stainless steel or other approved corrosion resistance metal. The Contractor shall supply and use only shielded cables for the motor leads; at no junction and for no length shall the motor leads be without shielding.

Contractor is not responsible for installation of the three replacement submersible pumps.

WELL INSTALLATION

Part 1: General

1.1 General Information

This specification details the materials and installation of eleven recovery wells. The Contractor or their subcontractor shall be knowledgeable in environmental well drilling and be a licensed well driller capable of obtaining well installation permits. Contractor shall supply all materials and labor for the installation of the eleven recovery wells, vault boxes, and associated equipment, and shall construct them in accordance with the project construction drawings and as directed by the Owner's Engineer. Six recovery wells perform groundwater extraction using submersible pumps (RW-6S, RW-7S, RW-9S, RW-10S, RW-11S, and RW-12S), while five wells are dual phase extraction (DPE) only. The wells using submersible pumps are 5-inch diameter, while the DPE wells are 4-inch diameter wells.

1.2 Submittals

Prior to commencement of drilling, the Contractor shall submit drawings and/or catalog cut sheet depicting the materials and proposed installation method for approval. These drawings shall be accurate in every detail and shall contain all information necessary to relate the equipment to the specifications. Submittal of any and all permits required for this scope shall be the Contractor's responsibility, and shall be obtained prior to commencing work. The Contractor shall submit proof of permit approval as applicable to the work described herein.

Well completion logs and well drilling permits are required along with field notes describing the activities, quantities, materials, and time schedule.

Any substitutions to the materials and or methods shall be submitted in triplicate to the Owner's Engineer for approval. The Owner's Engineer will review the alternative and render a decision to accept as approved equal or reject the submittal.

1.3 Warranty

All products shall be covered by a one year warranty from manufacturers' defects. All services rendered shall be warranted for one year to be free of defects in craftsmanship. The Contractor shall be responsible for all warranties of craftsmanship, both for work that the Contractor performs and work performed by any subcontractors hired by the Contractor.

Part 2: Products

2.1 Recovery Well

Well casings shall be of Schedule 40 PVC construction, and all well screens shall be factory machine slotted to 0.01-inch slot size. Recovery wells shall be constructed with a 20/30 sand filter pack and use a 30/65 fine sand seal that is topped with Type-I Portland Neat Cement that extends to the bottom of the well vault.

2.2 Recovery Well Vault

Each recovery well shall be finished by the Contractor with a vault box and concrete pad that the Contractor shall supply. The vault boxes shall be H-20 traffic-rated, measure 2 ft by 2 ft, and measure 2 ft to the bottom of the side walls. Steel shall be coated with a black epoxy paint to prevent rust and corrosion. All incoming piping shall be installed beneath the walls of the vault box, so that no holes are created in the walls of the vault boxes. The vault box pads shall be finished with concrete with a standard rating of a minimum of 4 ksi, and shall extend laterally approximately 6 inches beyond the edge of the vault box and downward to the depth of the skirt. The Contractor shall supply the hoses, fittings, gauges, and other appurtenances shown in the well vaults in the attached construction drawings or as directed by the Owner's Engineer.

Part 3: Execution

3.1 Well Installation

The Contractor shall install eleven (11) total recovery wells in individual vaults as depicted in the project construction drawings. The Contractor shall be responsible for obtaining any and all permits required to perform this work and obtaining utility clearance for below grade utilities. Any costs associated with performing the work, such as permitting fees, utility locate costs, and traffic maintenance, shall be paid by the Contractor. All wells shall be cleared to at least 6 ft below land surface (BLS) using a hand auger, to clear for underground utilities and other hazards.

Previous site assessment activities identified the site lithology as fine to medium sands with varying percentages of silt. No confining unit is expected to be encountered during well installation. No further assessment is required in this area, so soil sample collection for OVA testing or laboratory analysis will not be conducted. However, the driller shall log the lithology as close as possible from the cuttings and note any anomalies encountered during well installation.

Soil cuttings generated during hand-clearing shall be drummed, and either disposed of by the County or spread on site, at the direction of the Owner's Engineer. All recovery wells shall be installed using the rotary sonic drilling method or hollow stem auger.

Each recovery well shall be developed by purging, surging, or other acceptable method until the recovered water is relatively clear and free of turbidity. Well development water shall be containerized and pumped into the existing treatment system as directed by the Owner's Engineer. If necessary, and as directed by the Owner's Engineer, Contractor shall perform additional development activities such as swabbing or surging wells in order to fully develop well.

After well installation is completed, the Contractor shall excavate around the well to construct the well vault. Contractor shall ensure no deleterious material is at base of vault footprint and shall over-excavate and backfill with clean soil as necessary. Vault base soil shall be compacted to 98 percent Proctor; however, density testing for this area is at the discretion of the Owner's Engineer.

WELL INSTALLATION

Part 1: General

1.1 General Information

This specification details the materials and installation of eleven recovery wells. The Contractor or their subcontractor shall be knowledgeable in environmental well drilling and be a licensed well driller capable of obtaining well installation permits. Contractor shall supply all materials and labor for the installation of the eleven recovery wells, vault boxes, and associated equipment, and shall construct them in accordance with the project construction drawings and as directed by the Owner's Engineer. Six recovery wells perform groundwater extraction using submersible pumps (RW-6S, RW-7S, RW-9S, RW-10S, RW-11S, and RW-12S), while five wells are dual phase extraction (DPE) only. The wells using submersible pumps are 5-inch diameter, while the DPE wells are 4-inch diameter wells.

1.2 Submittals

Prior to commencement of drilling, the Contractor shall submit drawings and/or catalog cut sheet depicting the materials and proposed installation method for approval. These drawings shall be accurate in every detail and shall contain all information necessary to relate the equipment to the specifications. Submittal of any and all permits required for this scope shall be the Contractor's responsibility, and shall be obtained prior to commencing work. The Contractor shall submit proof of permit approval as applicable to the work described herein.

Well completion logs and well drilling permits are required along with field notes describing the activities, quantities, materials, and time schedule.

Any substitutions to the materials and or methods shall be submitted in triplicate to the Owner's Engineer for approval. The Owner's Engineer will review the alternative and render a decision to accept as approved equal or reject the submittal.

1.3 Warranty

All products shall be covered by a one year warranty from manufacturers' defects. All services rendered shall be warranted for one year to be free of defects in craftsmanship. The Contractor shall be responsible for all warranties of craftsmanship, both for work that the Contractor performs and work performed by any subcontractors hired by the Contractor.

Part 2: Products

2.1 Recovery Well

Well casings shall be of Schedule 40 PVC construction, and all well screens shall be factory machine slotted to 0.01-inch slot size. Recovery wells shall be constructed with a 20/30 sand filter pack and use a 30/65 fine sand seal that is topped with Type-I Portland Neat Cement that extends to the bottom of the well vault.

2.2 Recovery Well Vault

Each recovery well shall be finished by the Contractor with a vault box and concrete pad that the Contractor shall supply. The vault boxes shall be H-20 traffic-rated, measure 2 ft by 2 ft, and measure 2 ft to the bottom of the side walls. Steel shall be coated with a black epoxy paint to prevent rust and corrosion. All incoming piping shall be installed beneath the walls of the vault box, so that no holes are created in the walls of the vault boxes. The vault box pads shall be finished with concrete with a standard rating of a minimum of 4 ksi, and shall extend laterally approximately 6 inches beyond the edge of the vault box and downward to the depth of the skirt. The Contractor shall supply the hoses, fittings, gauges, and other appurtenances shown in the well vaults in the attached construction drawings or as directed by the Owner's Engineer.

Part 3: Execution

3.1 Well Installation

The Contractor shall install eleven (11) total recovery wells in individual vaults as depicted in the project construction drawings. The Contractor shall be responsible for obtaining any and all permits required to perform this work and obtaining utility clearance for below grade utilities. Any costs associated with performing the work, such as permitting fees, utility locate costs, and traffic maintenance, shall be paid by the Contractor. All wells shall be cleared to at least 6 ft below land surface (BLS) using a hand auger, to clear for underground utilities and other hazards.

Previous site assessment activities identified the site lithology as fine to medium sands with varying percentages of silt. No confining unit is expected to be encountered during well installation. No further assessment is required in this area, so soil sample collection for OVA testing or laboratory analysis will not be conducted. However, the driller shall log the lithology as close as possible from the cuttings and note any anomalies encountered during well installation.

Soil cuttings generated during hand-clearing shall be drummed, and either disposed of by the County or spread on site, at the direction of the Owner's Engineer. All recovery wells shall be installed using the rotary sonic drilling method or hollow stem auger.

Each recovery well shall be developed by purging, surging, or other acceptable method until the recovered water is relatively clear and free of turbidity. Well development water shall be containerized and pumped into the existing treatment system as directed by the Owner's Engineer. If necessary, and as directed by the Owner's Engineer, Contractor shall perform additional development activities such as swabbing or surging wells in order to fully develop well.

After well installation is completed, the Contractor shall excavate around the well to construct the well vault. Contractor shall ensure no deleterious material is at base of vault footprint and shall over-excavate and backfill with clean soil as necessary. Vault base soil shall be compacted to 98 percent Proctor; however, density testing for this area is at the discretion of the Owner's Engineer.

SC-310 / SC-740 / DC-78

StormTech®

Detention • Retention • Water Quality

Design Manual

StormTech® Chamber Systems
for Stormwater Management

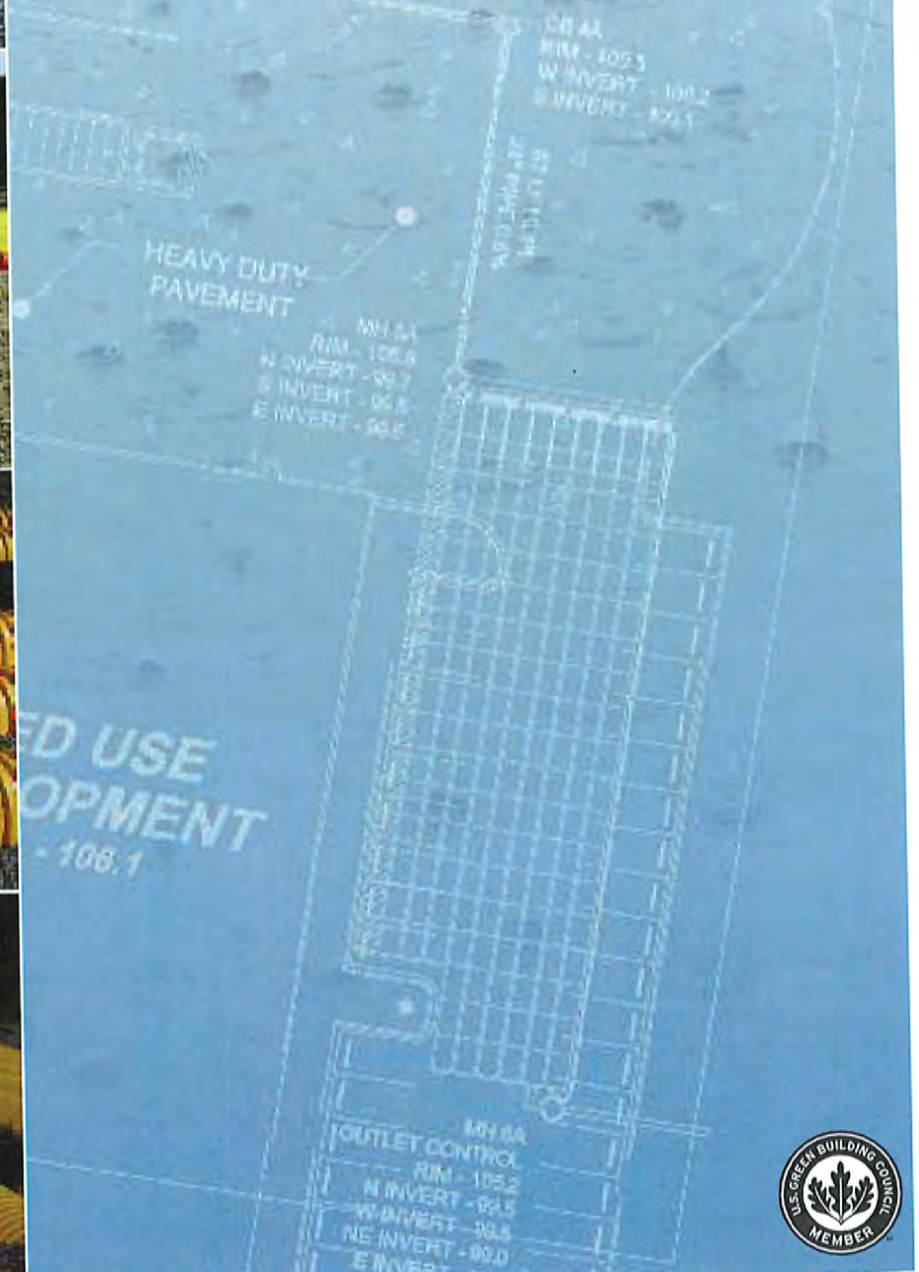

U.S. GREEN BUILDING COUNCIL MEMBER

Table of Contents

StormTech

1.0 Introduction 2
2.0 Product Information 3
3.0 Structural Capabilities 7
4.0 Foundation for Chambers 9
5.0 Cumulative Storage Volumes 10
6.0 Required Materials and Row Separation 12
7.0 Inletting the Chambers 13
8.0 Outlets for Chambers 16
9.0 Other Considerations 17
10.0 System Sizing 18
11.0 Detail Drawings 19
12.0 Inspection and Maintenance 22
13.0 General Notes 24
14.0 StormTech Product Specifications 25
15.0 Chamber Specifications for Contract Documents 26

* For MC-3500 and MC-4500 designs, please refer to the MC-3500/MC-4500 Design Manual

The StormTech Technical Services Department assists design professionals in specifying StormTech stormwater systems. This assistance includes the layout of chambers to meet the engineer's volume requirements and the connections to and from the chambers. The Technical Department can also assist converting and cost engineering projects currently specified with ponds, pipe, concrete and other manufactured stormwater detention/retention products. Please note that it is the responsibility of the design engineer to ensure that the chamber bed layout meets all design requirements and is in compliance with applicable laws and regulations governing this project.

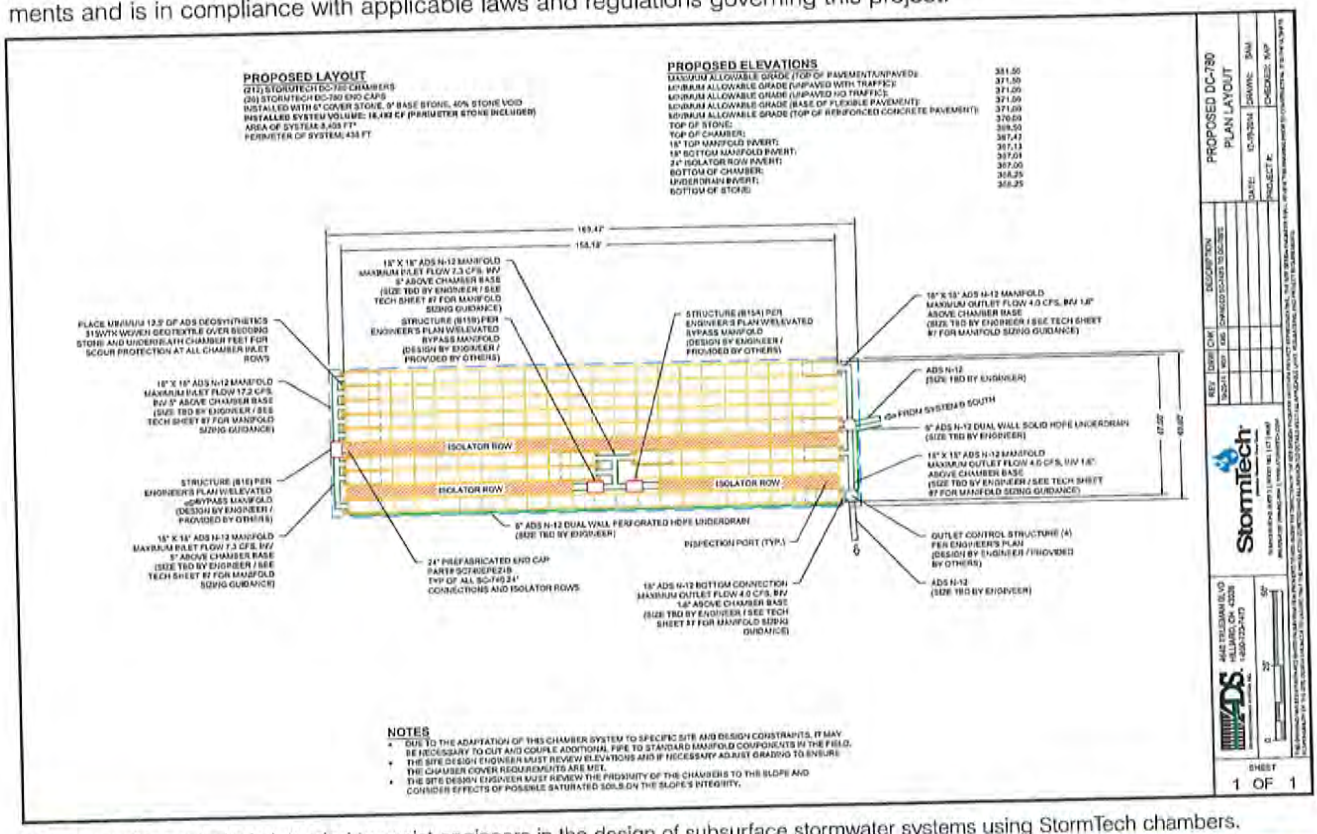

This manual is exclusively intended to assist engineers in the design of subsurface stormwater systems using StormTech chambers.

1.0 Introduction

StormTech

1.1 INTRODUCTION

StormTech stormwater management systems allow stormwater professionals to create more profitable, environmentally sound developments. Compared with other subsurface systems, StormTech systems offer lower overall installed cost, superior design flexibility and enhanced performance. Applications include commercial, residential, agricultural and highway drainage.

StormTech has invested over $10 million and many years in the development of StormTech chambers. These innovative products exceed the rigorous requirements of the standards governing the design of thermoplastic structures.

1.2 THE GOLD STANDARD IN STORMWATER MANAGEMENT

The advanced designs of StormTech chambers were created by implementing an aggressive research, development, design and manufacturing protocol. StormTech chamber products establish the new gold standard in stormwater management through:

- Collaborations with experts in the field of buried plastic structures and polyolefin materials
- The development and utilization of new testing methods and proprietary test methods
- The use of thermoformed prototypes to verify engineering models, perform in-ground testing and install observation sites
- The investment in custom-designed, injection molding equipment
- The utilization of polypropylene and polyethylene as manufacturing materials
- The design of molded-in features not possible with traditional thermoformed chambers

Section 3.0 of this design manual, *Structural Capabilities*, provides a detailed description of the research, development and design process.

Many of StormTech's unique chamber features can benefit a site developer, stormwater system designer, and installer. Where applicable, StormTech Product Specifications are referenced throughout this design manual. If StormTech's unique product benefits are important to a stormwater system design, consider including the applicable StormTech Product Specifications on the site plans. This can prevent substitutions with inferior products. Refer to Section 14.0, *StormTech Product Specifications*.

1.3 PRODUCT QUALITY AND DESIGN TO INTERNATIONAL STANDARDS

StormTech chambers are designed to meet the full scope of design requirements of Section 12.12 of the AASHTO LRFD Bridge Design Specifications and produced to the requirements of the American Society of Testing Materials (ASTM) International specifications F2418 (polypropylene chambers) and F2922 (polyethylene chambers).

StormTech chambers provide the full AASHTO safety factors for live loads and permanent earth loads. The two ASTM standards mentioned previously are linked to the AASHTO LRFD Bridge Design Specifications Section 12.12 design standard. Both ASTM standards require that the safety factors included in the AASHTO guidance are achieved as a prerequisite to meeting either ASTM F2418 or ASTM F2922. StormTech chambers are also designed in accordance with ASTM F2787, "Standard Practice for Structural Design of Thermoplastic Corrugated Wall Stormwater Collection Chambers" which provides specific guidance on how to design thermoplastic chambers in accordance with AASHTO Section 12.12. These standards provide both the assurance of product quality and safe structural design.

For non-proprietary specifications for public bids that ensure high product quality and safe design, consider including the specification in Section 15.0 Chamber Specifications for Contract Documents.

1.4 TECHNICAL SUPPORT FOR PLAN REVIEWS

StormTech's in-house technical support staff is available to review proposed plans that incorporate StormTech chamber systems. They are also available to assist with plan conversions from existing products to StormTech. Not all plan sheets are necessary for StormTech's review. Required sheets include plan view sheet(s) with design contours, cross sections of the stormwater system including catch basins and drainage details.

When specifying StormTech chambers it is recommended that the following items are included in project plans: StormTech chamber system General Notes, applicable StormTech chamber illustrations and StormTech chamber system Product Specifications. These items are available in various formats and can be obtained by contacting StormTech at **1-860-529-8188** or may be downloaded at **www.stormtech.com.**

StormTech's plan review is limited to the sole purpose of determining whether plans meet StormTech chamber systems' minimum requirements. **It is the ultimate responsibility of the design engineer to assure that the stormwater system's design is in full compliance with all applicable laws and regulations.** StormTech products must be designed and installed in accordance with StormTech's minimum requirements.

SEND PLANS TO:

StormTech, Plan Review, 70 Inwood Road, Suite 3, Rocky Hill, CT 06067 E-mail: info@stormtech.com. File size should not exceed 10 MB.

2.0 Product Information

StormTech

2.1 PRODUCT APPLICATIONS

StormTech chamber systems may function as stormwater detention, retention, first-flush storage, or some combination of these. The StormTech chambers can be used for commercial, municipal, industrial, recreational, and residential applications especially for installations under parking lots and commercial roadways.

One of the key advantages of the StormTech chamber system is its design flexibility. Chambers may be configured into beds or trenches of various sizes or shapes. They can be centralized or decentralized, and fit on nearly all sites. Chamber lengths enhance the ability to develop on both existing and pre-developed projects. The systems can be designed easily and efficiently around utilities, natural or man-made structures and any other limiting boundaries.

2.2 CHAMBERS FOR STORMWATER DETENTION

Chamber systems have been used effectively for stormwater detention for over 15 years. A detention system temporarily holds water while it is released at a defined rate through an outlet. While some infiltration may occur in a detention system, it is often considered an environmental benefit and a storage safety factor. Over 70% of StormTech's installations are non-watertight detention systems. There are only a few uncommon situations where a detention system might need to limit infiltration: the subgrade soil's bearing capacity is significantly affected by saturation such as with expansive clays or karst soils, and; in sensitive aquifer areas where the depth to groundwater does not meet local guidelines. Adequate pretreatment could eliminate concerns for the latter case. A thermoplastic liner may be considered for both situations to limit infiltration.

2.3 STONE POROSITY ASSUMPTION

A StormTech chamber system requires the application of clean, crushed, angular stone below, between and above the chambers. This stone serves as a structural component while allowing conveyance and storage of stormwater. Storage volume examples throughout this Design Manual are calculated with an assumption that the stone has an industry standard porosity of 40%. Actual stone porosity may vary. Contact StormTech for information on calculating stormwater volumes with varying stone porosity assumptions.

2.4 CHAMBER SELECTION

Primary considerations when selecting between the SC-310™, SC-740™ and DC-780™ chambers are the depth to restrictive layer, available area for subsurface storage, cover height and outfall restrictions.

The StormTech SC-310 chamber shown on page 4 is ideal for systems requiring low-rise and wide-span solutions. This low profile chamber allows the storage of large volumes, 1.3 ft^3/ft^2 (0.40 m^3/m^2) [minimum], at minimum depths.

The SC-310 and SC-740 chambers and end plates.

StormTech systems can be integrated into retrofit and new construction projects.

Like the Stormtech SC-310, the StormTech SC-310-3 found on page 6 allows for a design option for sites with both limited cover and limited space. With only 3" of spacing between the chambers, the SC-310-3 still provides 1.3 ft^3/ft^2 (0.40 m^3/m^2) [minimum] of storage.

The StormTech SC-740 chamber shown on page 8 optimizes storage volumes in relatively small footprints. By providing 2.2 ft^3/ft^2 (0.67 m^3/m^2) [minimum] of storage, the SC-740 chambers can minimize excavation, backfill and associated costs.

The DC-780 chamber shown on page 10 has been developed for those applications which exceed the maximum 8 ft (2.44 m) burial depth of the SC-740 and SC-310 chambers. The DC-780 is a modified version of the SC-740 allowing it to reach a maximum burial depth of 12 ft (3.66 m). The design of the DC-780 chamber, like other StormTech chambers, is designed and manufactured in accordance with the AASHTO LRFD Bridge Design Specifications as well as ASTM F 2418 and ASTM F 2787 ensuring structural adequacy for deeper systems.

The end corrugations of the DC-780 chamber have not been modified in order to allow connections to the SC-740 chamber. This will allow hybrid systems utilizing both chambers in one system design.

StormTech SC-310 Chamber

SC-310 Chamber

Designed to meet the most stringent industry performance standards for superior structural integrity while providing designers with a cost-effective method to save valuable land and protect water resources. The StormTech system is designed primarily to be used under parking lots thus maximizing land usage for commercial and municipal applications.

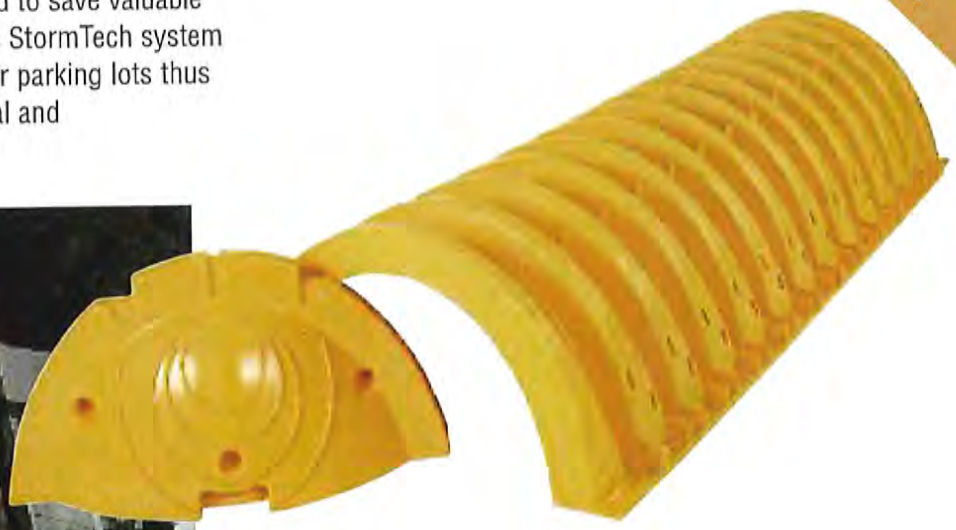

StormTech SC-310 Chamber (not to scale)

Nominal Chamber Specifications

Size (L x W x H)	85.4" x 34.0" x 16.0" (2170 x 864 x 406 mm)
Chamber Storage	14.7 ft³ (0.42 m³)
Min. Installed Storage*	31.0 ft³ (0.88 m³)
Weight	37.0 lbs (16.8 kg)

*Assumes 6" (150 mm) stone above, below and between chambers and 40% stone porosity.

Shipping

41 chambers/pallet

108 end caps/pallet

18 pallets/truck

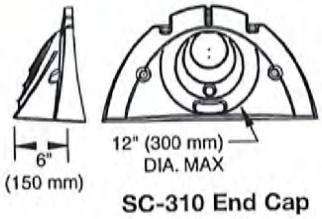

SC-310 End Cap

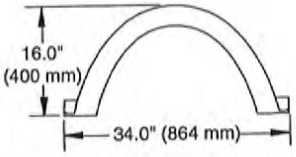

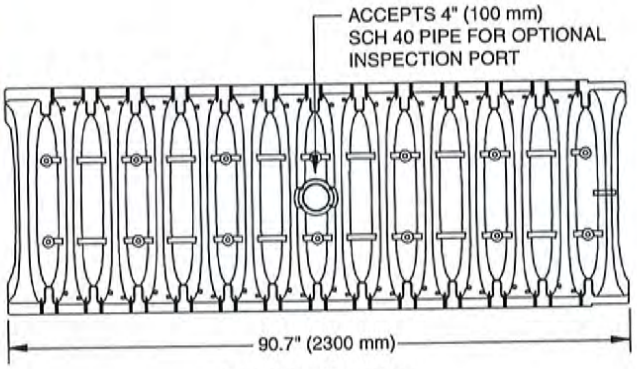

SC-310 Chamber

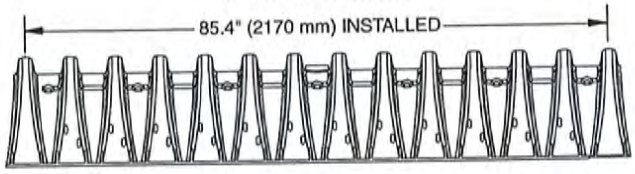

StormTech SC-310 Chamber

SC-310 Cumulative Storage Volumes Per Chamber

Assumes 40% Stone Porosity. Calculations are Based Upon a 6" (150 mm) Stone Base Under the Chambers.

Depth of Water in System Inches (mm)	Cumulative Chamber Storage ft³ (m³)	Total System Cumulative Storage ft³ (m³)
28 (711)	14.70 (0.416)	31.00 (0.878)
27 (686)	14.70 (0.416)	30.21 (0.855)
26 (680)	Stone 14.70 (0.416)	29.42 (0.833)
25 (610)	Cover 14.70 (0.416)	28.63 (0.811)
24 (609)	14.70 (0.416)	27.84 (0.788)
23 (584)	14.70 (0.416)	27.05 (0.766)
22 (559)	14.70 (0.416)	26.26 (0.748)
21 (533)	14.64 (0.415)	25.43 (0.720)
20 (508)	14.49 (0.410)	24.54 (0.695)
19 (483)	14.22 (0.403)	23.58 (0.668)
18 (457)	13.68 (0.387)	22.47 (0.636)
17 (432)	12.99 (0.368)	21.25 (0.602)
16 (406)	12.17 (0.345)	19.97 (0.566)
15 (381)	11.25 (0.319)	18.62 (0.528)
14 (356)	10.23 (0.290)	17.22 (0.488)
13 (330)	9.15 (0.260)	15.78 (0.447)
12 (305)	7.99 (0.227)	14.29 (0.425)
11 (279)	6.78 (0.192)	12.77 (0.362)
10 (254)	5.51 (0.156)	11.22 (0.318)
9 (229)	4.19 (0.119)	9.64 (0.278)
8 (203)	2.83 (0.081)	8.03 (0.227)
7 (178)	1.43 (0.041)	6.40 (0.181)
6 (152)	0	4.74 (0.134)
5 (127)	0	3.95 (0.112)
4 (102)	0	3.16 (0.090)
3 (76)	Stone Foundation 0	2.37 (0.067)
2 (51)	0	1.58 (0.046)
1 (25)	0	0.79 (0.022)

Note: Add 0.79 cu. ft. (0.022 m³) of storage for each additional inch (25 mm) of stone foundation.

Storage Volume Per Chamber ft³ (m³)

	Bare Chamber Storage	Chamber and Stone Stone Foundation Depth in. (mm)		
	ft³ (m³)	6 (150)	12 (300)	18 (450)
StormTech SC-310	14.7 (0.4)	31.0 (0.9)	35.7 (1.0)	40.4 (1.1)

Note: Assumes 6" (150 mm) of stone above chambers, 6" (150 mm) row spacing and 40% stone porosity.

Amount of Stone Per Chamber

	Stone Foundation Depth		
ENGLISH TONS (yds³)	6"	12"	18"
StormTech SC-310	2.1 (1.5 yd³)	2.7 (1.9 yd³)	3.4 (2.4 yd³)
METRIC KILOGRAMS (m³)	**150 mm**	**300 mm**	**450 mm**
StormTech SC-310	1830 (1.1 m³)	2490 (1.5 m³)	2990 (1.8 m³)

Note: Assumes 6" (150 mm) of stone above, and between chambers.

Volume of Excavation Per Chamber yd³ (m³)

	Stone Foundation Depth		
	6" (150 mm)	12" (300 mm)	18" (450 mm)
StormTech SC-310	2.9 (2.2)	3.4 (2.6)	3.8 (2.9)

Note: Assumes 6" (150 mm) of row separation and 18" (450 mm) of cover. The volume of excavation will vary as the depth of the cover increases.

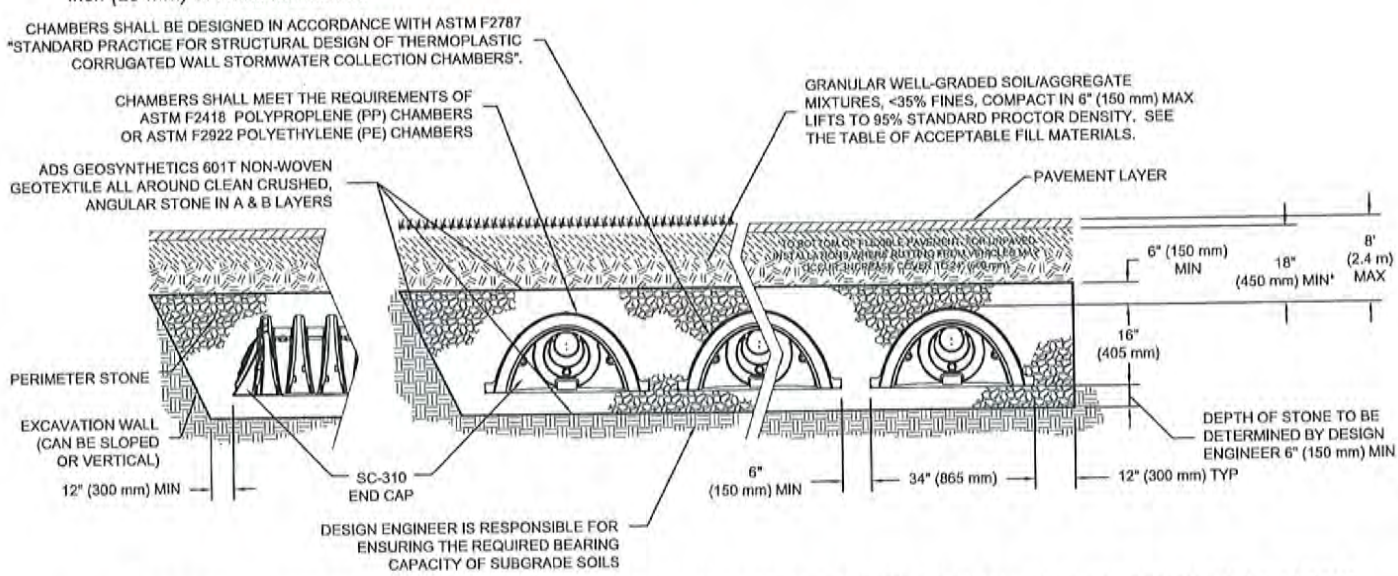

THE INSTALLED CHAMBER SYSTEM SHALL PROVIDE THE LOAD FACTORS SPECIFIED IN THE AASHTO LRFD BRIDGE DESIGN SPECIFICATIONS SECTION 12.12 FOR EARTH AND LIVE LOADS, WITH CONSIDERATION FOR IMPACT AND MULTIPLE VEHICLE PRESENCES.

StormTech SC-310-3 Chamber

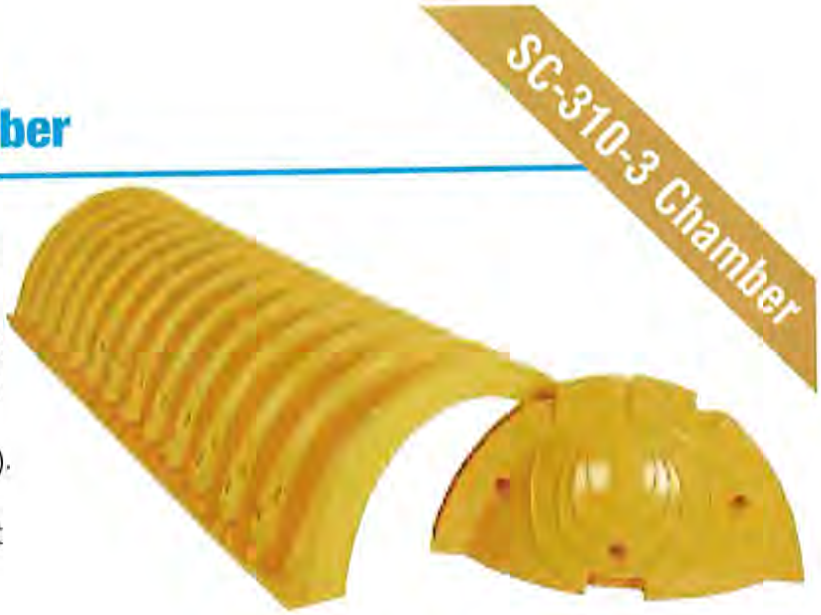

The proven strength and durability of the SC-310-3 Chamber allows for a design option for sites where limited cover, limited space, high water table and escalated aggregate cost are a factor. The SC-310-3 has a minimum cover requirement of 16" (400 mm) to bottom of pavement and reduces the spacing requirement between chambers by 50% to 3" (76 mm). This provides a reduced footprint overall and allows the designer to offer a traffic bearing application yet comply with water table separation regulations.

StormTech SC-310-3 Chamber (not to scale)

Nominal Chamber Specifications

Size (L x W x H)	85.4" x 34.0" x 16.0" (2170 x 864 x 406 mm)
Chamber Storage	14.7 ft³ (0.42 m³)
Min. Installed Storage*	29.3 ft³ (0.83 m³)
Weight	37.0 lbs (16.8 kg)

*Assumes 6" (150 mm) stone above and below chambers, 3" (76 mm) row spacing and 40% stone porosity.

Shipping

41 chambers/pallet

108 end caps/pallet

18 pallets/truck

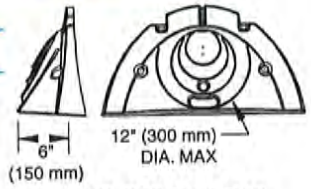

SC-310 End Cap

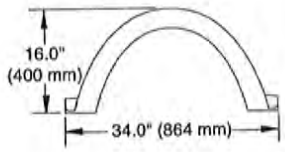

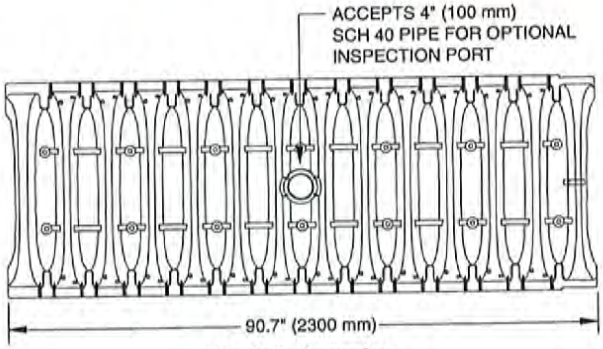

SC-310 Chamber

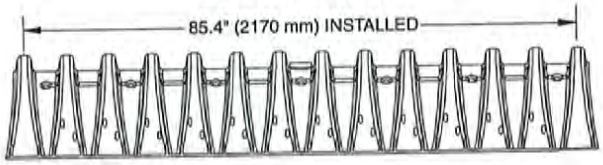

Typical Cross Section Detail

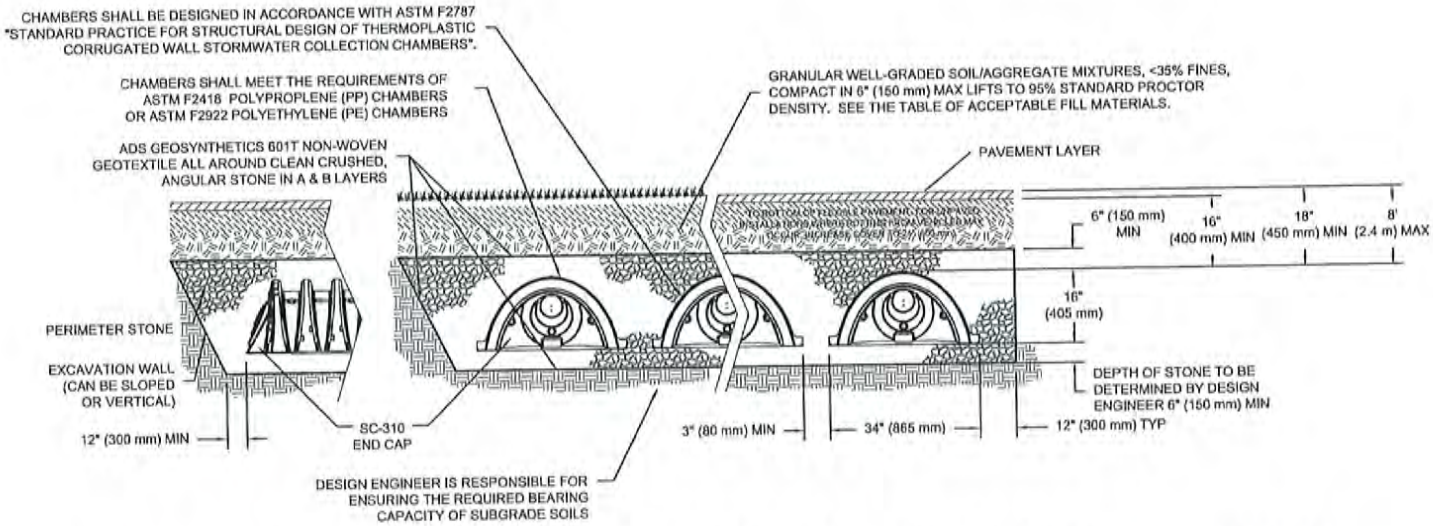

THE INSTALLED CHAMBER SYSTEM SHALL PROVIDE THE LOAD FACTORS SPECIFIED IN THE AASHTO LRFD BRIDGE DESIGN SPECIFICATIONS SECTION 12.12 FOR EARTH AND LIVE LOADS, WITH CONSIDERATION FOR IMPACT AND MULTIPLE VEHICLE PRESENCES.

StormTech SC-310-3 Chamber

SC-310-3 Cumulative Storage Volume Per Chamber

Assumes 40% Stone Porosity. Calculations are Based Upon a 6" (150 mm) Stone Base Under the Chambers.

Depth of Water in System Inches (mm)	Cumulative Chamber Storage ft³ (m³)	Total System Cumulative Storage ft³ (m³)
28 (711)	14.7 (0.416)	29.34 (0.831)
27 (686)	14.7 (0.416)	28.60 (0.810)
26 (660)	Stone 14.7 (0.416)	27.87 (0.789)
25 (635)	Cover 14.7 (0.416)	27.14 (0.769)
24 (610)	14.7 (0.416)	26.41 (0.748)
23 (584)	14.7 (0.416)	25.68 (0.727)
22 (559)	14.7 (0.416)	24.95 (0.707)
21 (533)	14.64 (0.415)	24.18 (0.685)
20 (508)	14.49 (0.410)	23.36 (0.661)
19 (483)	14.22 (0.403)	22.47 (0.636)
18 (457)	13.68 (0.387)	21.41 (0.606)
17 (432)	12.99 (0.368)	20.25 (0.573)
16 (406)	12.17 (0.345)	19.03 (0.539)
15 (381)	11.25 (0.319)	17.74 (0.502)
14 (356)	10.23 (0.290)	16.40 (0.464)
13 (330)	9.15 (0.260)	15.01 (0.425)
12 (305)	7.99 (0.226)	13.59 (0.385)
11 (279)	6.78 (0.192)	12.13 (0.343)
10 (254)	5.51 (0.156)	10.63 (0.301)
9 (229)	4.19 (0.119)	9.11 (0.258)
8 (203)	2.83 (0.080)	7.56 (0.214)
7 (178)	1.43 (0.040)	5.98 (0.169)
6 (152)	0	4.39 (0.124)
5 (127)	0	3.66 (0.104)
4 (102)	Stone Foundation 0	2.93 (0.083)
3 (76)	0	2.19 (0.062)
2 (51)	0	1.46 (0.041)
1 (25)	0	0.73 (0.021)

Note: Add 0.73 ft³ (0.021 m³) of storage for each additional inch (25 mm) of stone foundation.

Storage Volume per Chamber ft³ (m³)

	Bare Chamber Storage ft³ (m³)	Chamber and Stone Volume Stone Foundation Depth in. (mm)		
		6 (150)	12 (300)	18 (450)
SC-310-3	14.7 (0.42)	29.3 (0.83)	33.7 (0.95)	38.1 (1.08)

Note: Assumes 6" (150 mm) of stone above chambers, 3" (76 mm) row spacing and 40% stone porosity.

Volume of Excavation Per Chamber yd³ (m³)

	Stone Foundation Depth		
	6" (150)	12" (300)	18" (450)
SC-310-3	2.6 (2.0)	3.0 (2.3)	3.4 (2.6)

Note: Assumes 3" (76 mm) of row separation, 6" (150 mm) of stone above the chambers and 16" (400 mm) of cover. The volume of excavation will vary as depth of cover increases.

Amount of Stone Per Chamber

	Stone Foundation Depth		
ENGLISH TONS (yd³)	6"	12"	18"
SC-310-3	1.9 (1.4)	2.5 (1.8)	3.1 (2.2)
METRIC KILOGRAMS (m³)	150 mm	300 mm	450 mm
SC-310-3	1724 (1.0)	2268 (1.3)	2812 (1.7)

Note: Assumes 6" (150 mm) of stone above chambers and 3" (76 mm) row spacing.

Cover ft (m)	Minimum Required Bearing Resistance for Service Loads ksf (kPa)										
	3.0 (144)	2.9 (139)	2.8 (134)	2.7 (129)	2.6 (124)	2.5 (120)	2.4 (115)	2.3 (110)	2.2 (105)	2.1 (101)	2.0 (96)
1.5 (0.46)	6 (152)	9 (229)	9 (229)	9 (229)	9 (229)	9 (229)	12 (305)	12 (305)	12 (305)	15 (381)	15 (381)
2 (0.61)	6 (152)	6 (152)	9 (229)	9 (229)	9 (229)	9 (229)	12 (305)	12 (305)	12 (305)	15 (381)	15 (381)
2.5 (0.76)	6 (152)	6 (152)	6 (152)	6 (152)	6 (152)	9 (229)	9 (229)	9 (229)	12 (305)	12 (305)	12 (305)
3 (0.91)	6 (152)	6 (152)	6 (152)	6 (152)	6 (152)	6 (152)	9 (229)	9 (229)	9 (229)	9 (229)	12 (305)
3.5 (1.07)	6 (152)	6 (152)	6 (152)	6 (152)	6 (152)	6 (152)	6 (152)	9 (229)	9 (229)	9 (229)	12 (305)
4 (1.22)	6 (152)	6 (152)	6 (152)	6 (152)	6 (152)	6 (152)	6 (152)	9 (229)	9 (229)	9 (229)	9 (229)
4.5 (1.37)	6 (152)	6 (152)	6 (152)	6 (152)	6 (152)	6 (152)	6 (152)	6 (152)	9 (229)	9 (229)	9 (229)
5 (1.52)	6 (152)	6 (152)	6 (152)	6 (152)	6 (152)	6 (152)	6 (152)	9 (229)	9 (229)	9 (229)	9 (229)
5.5 (1.68)	6 (152)	6 (152)	6 (152)	6 (152)	6 (152)	6 (152)	6 (152)	9 (229)	9 (229)	9 (229)	12 (305)
6 (1.83)	6 (152)	6 (152)	6 (152)	6 (152)	6 (152)	6 (152)	9 (229)	9 (229)	9 (229)	9 (229)	12 (305)
6.5 (1.98)	6 (152)	6 (152)	6 (152)	6 (152)	6 (152)	6 (152)	9 (229)	9 (229)	9 (229)	12 (305)	12 (305)
7 (2.13)	6 (152)	6 (152)	6 (152)	6 (152)	6 (152)	9 (229)	9 (229)	9 (229)	9 (229)	12 (305)	12 (305)
7.5 (2.29)	6 (152)	6 (152)	6 (152)	6 (152)	9 (229)	9 (229)	9 (229)	9 (229)	12 (305)	12 (305)	12 (305)
8 (2.44)	6 (152)	6 (152)	6 (152)	9 (229)	9 (229)	9 (229)	9 (229)	12 (305)	12 (305)	12 (305)	15 (381)

NOTE: The design engineer is solely responsible for assessing the bearing resistance (allowable bearing capacity) of the subgrade soils and determining the depth of foundation stone. Subgrade bearing resistance should be assessed with consideration for the range of soil moisture conditions expected under a stormwater system.

StormTech SC-740 Chamber

SC-740 Chamber

Designed to meet the most stringent industry performance standards for superior structural integrity while providing designers with a cost-effective method to save valuable land and protect water resources. The StormTech system is designed primarily to be used under parking lots thus maximizing land usage for commercial and municipal applications.

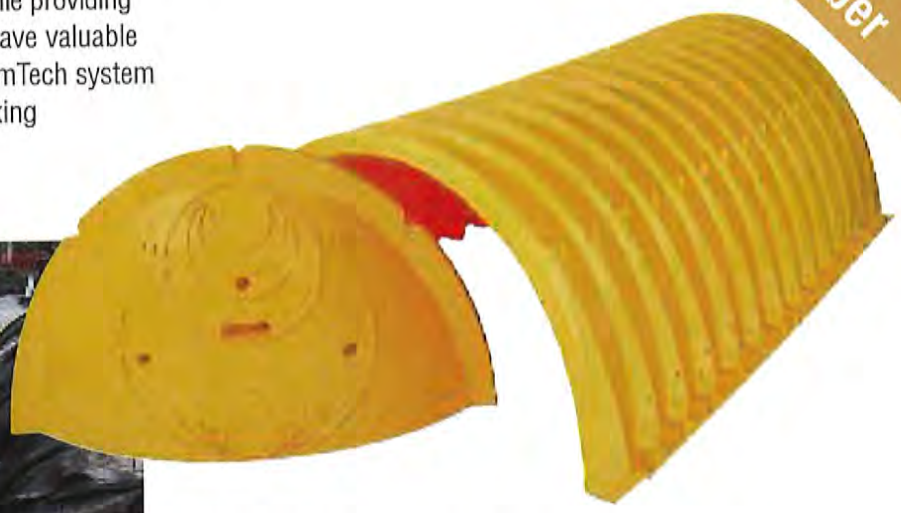

StormTech SC-740 Chamber (not to scale)

Nominal Chamber Specifications

Size (L x W x H)	85.4" x 51.0" x 30.0" (2170 x 1295 x 762 mm)
Chamber Storage	45.9 ft³ (1.30 m³)
Min. Installed Storage*	74.9 ft³ (2.12 m³)
Weight	74.0 lbs (33.6 kg)

*Assumes 6" (150 mm) stone above, below and between chambers and 40% stone porosity.

Shipping

30 chambers/pallet

60 end caps/pallet

12 pallets/truck

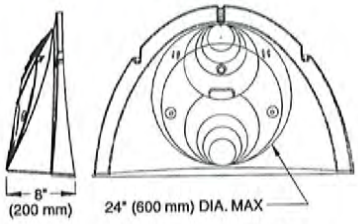

SC-740 End Cap

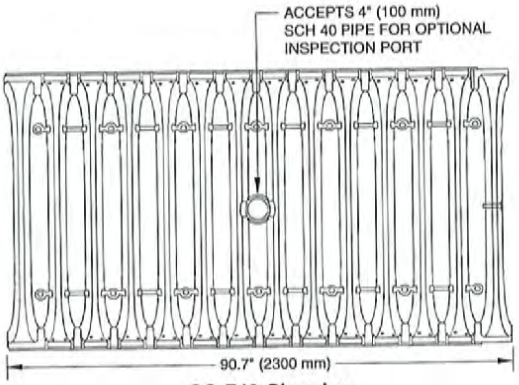

SC-740 Chamber

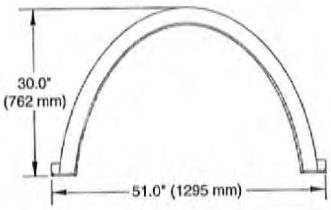

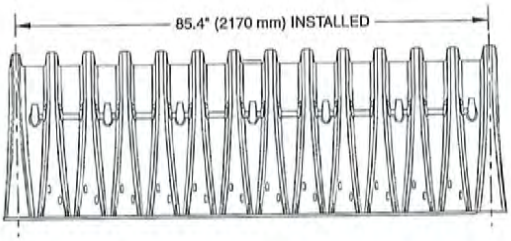

StormTech SC-740 Chamber

SC-740 Cumulative Storage Volumes Per Chamber

Assumes 40% Stone Porosity. Calculations are Based Upon a 6" (150 mm) Stone Base Under the Chambers.

Depth of Water in System Inches (mm)	Cumulative Chamber Storage Ft³ (m³)	Total System Cumulative Storage Ft³ (m³)
42 (1067)	45.90 (1.300)	74.90 (2.121)
41 (1041)	45.90 (1.300)	73.77 (2.089)
40 (1016)	Stone 45.90 (1.300)	72.64 (2.057)
39 (991)	Cover 45.90 (1.300)	71.52 (2.025)
38 (965)	45.90 (1.300)	70.39 (1.993)
37 (948)	45.90 (1.300)	69.26 (1.961)
36 (914)	45.90 (1.300)	68.14 (1.929)
35 (889)	45.85 (1.298)	66.98 (1.897)
34 (864)	45.69 (1.294)	65.75 (1.862)
33 (838)	45.41 (1.286)	64.46 (1.825)
32 (813)	44.81 (1.269)	62.97 (1.783)
31 (787)	44.01 (1.246)	61.36 (1.737)
30 (762)	43.06 (1.219)	59.66 (1.689)
29 (737)	41.98 (1.189)	57.89 (1.639)
28 (711)	40.80 (1.155)	56.05 (1.587)
27 (686)	39.54 (1.120)	54.17 (1.534)
26 (660)	38.18 (1.081)	52.23 (1.479)
25 (635)	36.74 (1.040)	50.23 (1.422)
24 (610)	35.22 (0.977)	48.19 (1.365)
23 (584)	33.64 (0.953)	46.11 (1.306)
22 (559)	31.99 (0.906)	44.00 (1.246)
21 (533)	30.29 (0.858)	41.85 (1.185)
20 (508)	28.54 (0.808)	39.67 (1.123)
19 (483)	26.74 (0.757)	37.47 (1.061)
18 (457)	24.89 (0.705)	35.23 (0.997)
17 (432)	23.00 (0.651)	32.96 (0.939)
16 (406)	21.06 (0.596)	30.68 (0.869)
15 (381)	19.09 (0.541)	28.36 (0.803)
14 (356)	17.08 (0.484)	26.03 (0.737)
13 (330)	15.04 (0.426)	23.68 (0.670)
12 (305)	12.97 (0.367)	21.31 (0.608)
11 (279)	10.87 (0.309)	18.92 (0.535)
10 (254)	8.74 (0.247)	16.51 (0.468)
9 (229)	6.58 (0.186)	14.09 (0.399)

SC-740 Cumulative Storage Volumes Per Chamber (cont.)

Depth of Water in System Inches (mm)	Cumulative Chamber Storage Ft³ (m³)	Total System Cumulative Storage Ft³ (m³)
8 (203)	4.41 (0.125)	11.66 (0.330)
7 (178)	2.21 (0.063)	9.21 (0.264)
6 (152)	0	6.76 (0.191)
5 (127)	0	5.63 (0.160)
4 (102)	Stone Foundation 0	4.51 (0.125)
3 (76)	0	3.38 (0.095)
2 (51)	0	2.25 (0.064)
1 (25)	0	1.13 (0.032)

Note: Add 1.13 cu. ft. (0.032 m³) of storage for each additional inch (25 mm) of stone foundation.

Storage Volume Per Chamber ft³ (m³)

	Bare Chamber Storage ft³ (m³)	Chamber and Stone Stone Foundation Depth in. (mm)		
		6 (150)	12 (300)	18 (450)
StormTech SC-740	45.9 (1.3)	74.9 (2.1)	81.7 (2.3)	88.4 (2.5)

Note: Assumes 6" (150 mm) of stone above chambers, 6" (150 mm) row spacing and 40% porosity.

Amount of Stone Per Chamber

	Stone Foundation Depth		
ENGLISH TONS (yd³)	6"	12"	18"
StormTech SC-740	3.8 (2.8 yd³)	4.6 (3.3 yd³)	5.5 (3.9 yd³)
METRIC KILOGRAMS (m³)	**150 mm**	**300 mm**	**450 mm**
StormTech SC-740	3450 (2.1 m³)	4170 (2.5 m³)	4490 (3.0 m³)

Note: Assumes 6" (150 mm) of stone above, and between chambers.

Volume of Excavation Per Chamber yd³ (m³)

	Stone Foundation Depth		
	6" (150 mm)	12" (300 mm)	18" (450 mm)
StormTech SC-740	5.5 (4.2)	6.2 (4.7)	6.8 (5.2)

Note: Assumes 6" (150 mm) of row separation and 18" (450 mm) of cover. Volume of excavation will vary as depth of cover increases.

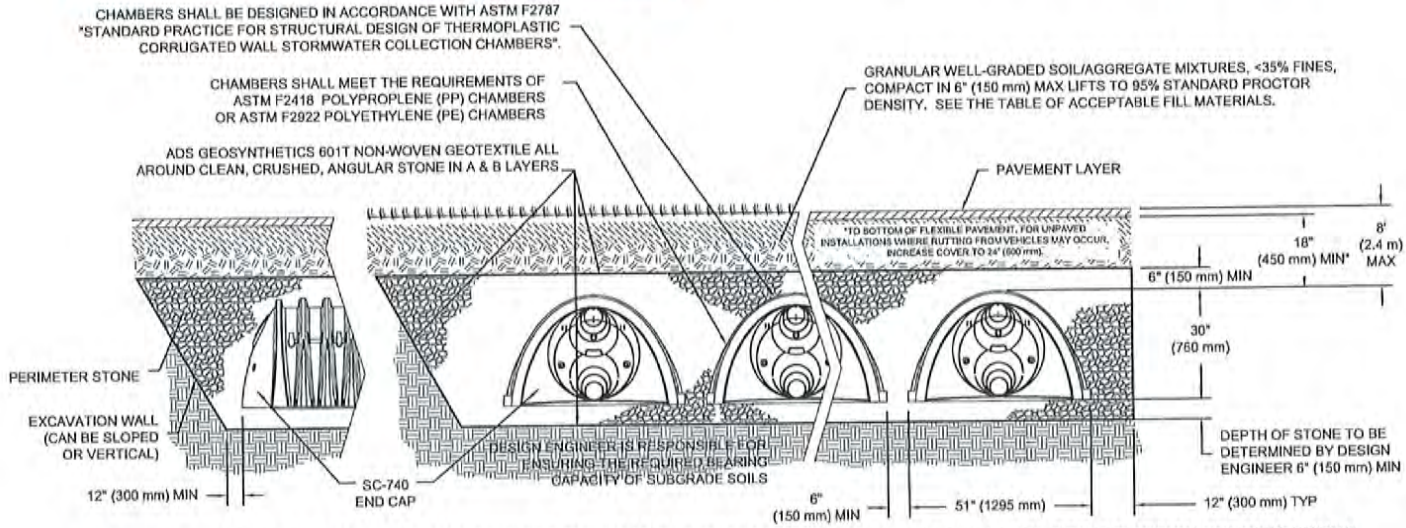

THE INSTALLED CHAMBER SYSTEM SHALL PROVIDE THE LOAD FACTORS SPECIFIED IN THE AASHTO LRFD BRIDGE DESIGN SPECIFICATIONS SECTION 12.12 FOR EARTH AND LIVE LOADS, WITH CONSIDERATION FOR IMPACT AND MULTIPLE VEHICLE PRESENCES.

StormTech DC-780 Chamber

DC-780 Chamber

Designed to meet the most stringent industry performance standards for superior structural integrity while providing designers with a cost-effective method to save valuable land and protect water resources. The StormTech system is designed primarily to be used under parking lots thus maximizing land usage for commercial and municipal applications.

- 12' Deep Cover applications.
- Designed in accordance with ASTM F 2787 and produced to meet the ASTM F 2418 product standard.
- AASHTO safety factors provided for AASHTO Design Truck (H20) and deep cover conditions

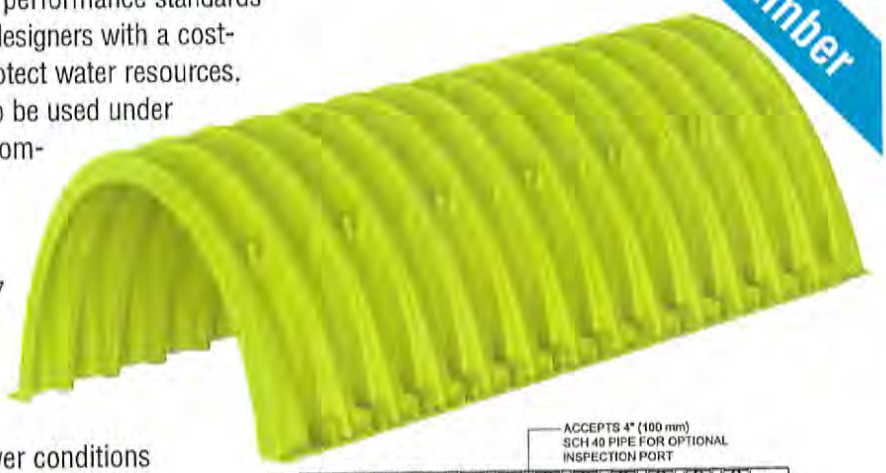

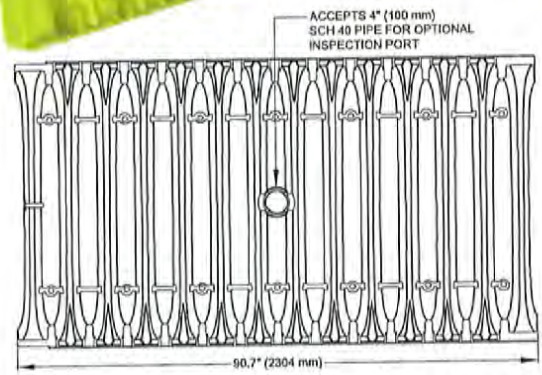

StormTech DC-780 Chamber (not to scale)

Nominal Chamber Specifications

Size (L x W x H)	85.4" x 51.0" x 30.0" (2169 x 1295 x 762 mm)
Chamber Storage	46.2 ft³ (1.3 m³)
Min. Installed Storage*	78.4 ft³ (2.2 m³)

* Assumes 9" (230 mm) stone below, 6" (150 mm) stone above, 6" (150 mm) row spacing and 40% stone porosity.

Shipping

24 chambers/pallet

60 end caps/pallet

12 pallets/truck

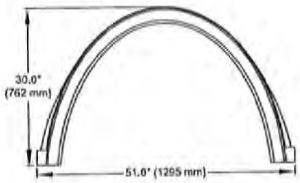

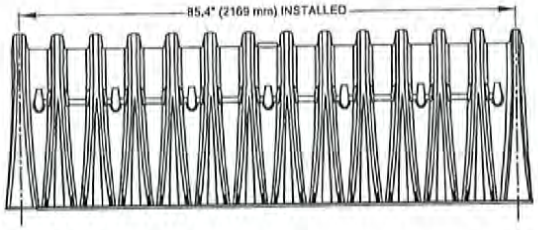

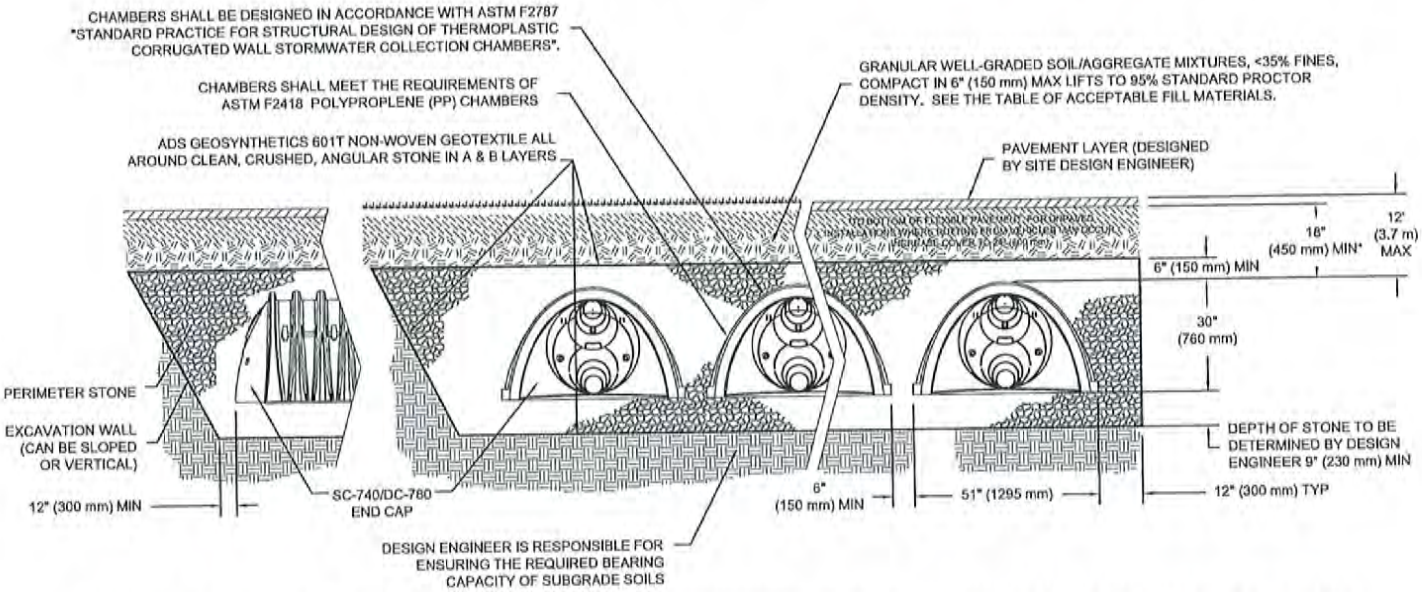

THE INSTALLED CHAMBER SYSTEM SHALL PROVIDE THE LOAD FACTORS SPECIFIED IN THE AASHTO LRFD BRIDGE DESIGN SPECIFICATIONS SECTION 12.12 FOR EARTH AND LIVE LOADS, WITH CONSIDERATION FOR IMPACT AND MULTIPLE VEHICLE PRESENCES.

StormTech DC-780 Chamber

DC-780 Cumulative Storage Volumes Per Chamber

Assumes 40% Stone Porosity. Calculations are Based Upon a 9" (230 mm) Stone Base Under the Chambers.

Depth of Water in System Inches (mm)	Cumulative Chamber Storage ft³ (m³)	Total System Cumulative Storage ft³ (m³)
45 (1143)	46.27 (1.310)	78.47 (2.222)
44 (1118)	46.27 (1.310)	77.34 (2.190)
43 (1092)	Stone 46.27 (1.310)	76.21 (2.158)
42 (1067)	Cover 46.27 (1.310)	75.09 (2.126)
41 (1041)	46.27 (1.310)	73.96 (2.094)
40 (1016)	46.27 (1.310)	72.83 (2.062)
39 (991)	46.27 (1.310)	71.71 (2.030)
38 (965)	46.21 (1.309)	70.54 (1.998)
37 (940)	46.04 (1.304)	69.32 (1.963)
36 (914)	45.76 (1.296)	68.02 (1.926)
35 (889)	45.15 (1.278)	66.53 (1.884)
34 (864)	44.34 (1.255)	64.91 (1.838)
33 (838)	43.38 (1.228)	63.21 (1.790)
32 (813)	42.29 (1.198)	61.43 (1.740)
31 (787)	41.11 (1.164)	59.59 (1.688)
30 (762)	39.83 (1.128)	57.70 (1.634)
29 (737)	38.47 (1.089)	55.76 (1.579)
28 (711)	37.01 (1.048)	53.76 (1.522)
27 (686)	35.49 (1.005)	51.72 (1.464)
26 (660)	33.90 (0.960)	49.63 (1.405)
25 (635)	32.24 (0.913)	47.52 (1.346)
24 (610)	30.54 (0.865)	45.36 (1.285)
23 (584)	28.77 (0.815)	43.18 (1.223)
22 (559)	26.96 (0.763)	40.97 (1.160)
21 (533)	25.10 (0.711)	38.72 (1.096)
20 (508)	23.19 (0.657)	36.45 (1.032)
19 (483)	21.25 (0.602)	34.16 (0.967)
18 (457)	19.26 (0.545)	31.84 (0.902)
17 (432)	17.24 (0.488)	29.50 (0.835)
16 (406)	15.19 (0.430)	27.14 (0.769)
15 (381)	13.10 (0.371)	24.76 (0.701)
14 (356)	10.98 (0.311)	22.36 (0.633)
13 (330)	8.83 (0.250)	19.95 (0.565)
12 (305)	6.66 (0.189)	17.52 (0.496)
11 (279)	4.46 (0.126)	15.07 (0.427)

DC-780 Cumulative Storage Volumes Per Chamber (cont.)

Depth of Water in System Inches (mm)	Cumulative Chamber Storage ft³ (m³)	Total System Cumulative Storage ft³ (m³)
10 (254)	2.24 (0.064)	12.61 (0.357)
9 (229)	0	10.14 (0.287)
8 (203)	0	9.01 (0.255)
7 (178)	0	7.89 (0.223)
6 (152)	Stone 0	6.76 (0.191)
5 (127)	Foundation 0	5.63 (0.160)
4 (102)	0	4.51 (0.128)
3 (76)	0	3.38 (0.096)
2 (51)	0	2.25 (0.064)
1 (25)	0	1.13 (0.032)

Note: Add 1.13 cu. ft. (0.032 m³) of storage for each additional inch (25 mm) of stone foundation.

Storage Volume Per Chamber ft³ (m³)

	Bare Chamber Storage ft³ (m³)	Chamber and Stone Volume- Stone Foundation Depth inches (millimeters)		
		9 (230)	12 (300)	18 (450)
StormTech DC-780	46.2 (1.3)	78.4 (2.2)	81.8 (2.3)	88.6 (2.5)

Note: Assumes 40% porosity for the stone, the bare chamber volume, 6" (150 mm) stone above, and 6" (150 mm) row spacing.

Amount of Stone Per Chamber

	Stone Foundation Depth		
ENGLISH TONS (YD³)	9"	12"	18"
StormTech DC-780	4.2 (3.0 yd³)	4.7 (3.3 yd³)	5.6 (3.9 yd³)
METRIC KILOGRAMS (M³)	230 mm	300 mm	450 mm
StormTech DC-780	3810 (2.3 m³)	4264 (2.5 m³)	5080 (3.0 m³)

Note: Assumes 6" (150 mm) of stone above, and between chambers.

Volume of Excavation Per Chamber yd³ (m³)

	Stone Foundation Depth		
	9" (230 mm)	12" (300 mm)	18" (450 mm)
StormTech DC-780	5.9 (4.5)	6.3 (4.8)	6.9 (5.3)

Note: Assumes 6" (150 mm) of separation between chamber rows and 18" (450 mm) of cover. The volume of excavation will vary as the depth of the cover increases.

mm)

StormTech

2.5 STORMTECH CHAMBERS

StormTech chamber systems have unique features to improve site optimization and reduce product waste. The SC-740, SC-310 and DC-780 chambers can be cut at the job site in approximately 6.5" (165 mm) increments to shorten a chamber's length. Designing and constructing chamber rows around site obstacles is easily accomplished by including specific cutting instructions or a well placed "cut to fit" note on the design plans. The last chamber of a row can be cut in any of its corrugation's valleys. An end cap placed into the trimmed corrugation's crest completes the row. The trimmed-off piece of a StormTech chamber may then be used to start the next row. See **Figure 4**.

To assist the contractor, StormTech chambers are molded with simple assembly instructions and arrows that indicate the direction in which to build rows. Rows are formed by overlapping the next chamber's "Start End" corrugation with the previously laid chamber's end corrugation. Two people can safely and efficiently form rows of chambers without complicated connectors, special tools or heavy equipment.
Product Specifications: 2.2, 2.4, 2.5, 2.9 and 3.2

2.6 STORMTECH END CAPS

The StormTech end cap has features which make the chamber system simple to design, easy to build and more versatile than other products. StormTech end caps can be easily secured within any corrugation's crest. A molded-in handle makes attaching the end cap a one-person operation. Tools or fasteners are not required.

StormTech end caps are required at each end of a chamber row to prevent stone intrusion (two per row). The SC-740 and DC-780 end caps will accept up to a 24" (600 mm) HDPE inlet pipe. The SC-310 end cap will accept up to a 12" (300 mm) HDPE inlet pipe. See **Figure 5**.
Product Specifications: 3.1, 3.2, 3.3 and 3.4

Figure 4 – Distance Between Corrugations (not to scale)

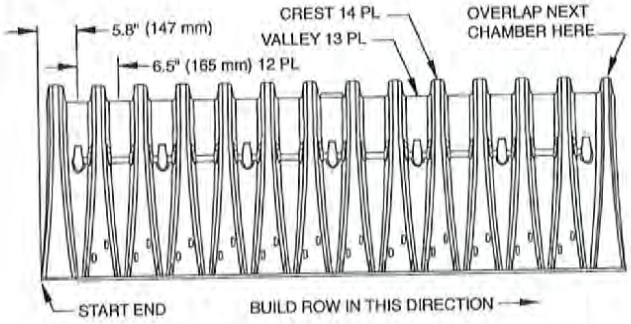

SC-740 chamber

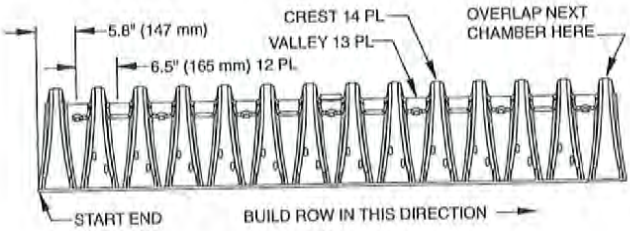

SC-310 chamber

Figure 5 – Chamber End Caps (not to scale)

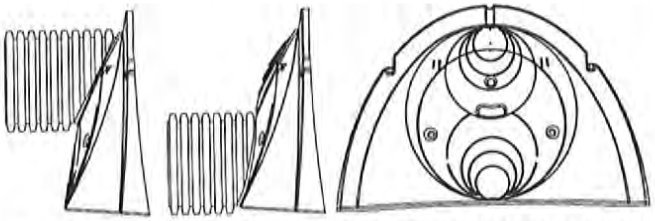

SC-740/DC-780 CHAMBER FABRICATED END CAP (TOP AND BOTTOM FEED)
PIPES SIZES RANGE FROM 6" (150 mm) TO 24" (600 mm)
(INVERTS VARY WITH PIPE SIZE)

SC-740 / DC-780 end cap

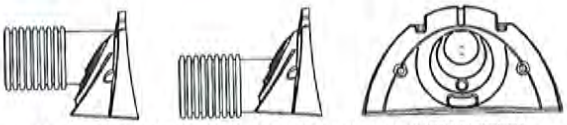

SC-310 CHAMBER FABRICATED END CAP (TOP AND BOTTOM FEED)
PIPES SIZES RANGE FROM 6" (150 mm) TO 12" (300 mm)
(INVERTS VARY WITH PIPE SIZE)

SC-310 end cap

3.0 Structural Capabilities

3.1 STRUCTURAL DESIGN APPROACH

When installed per StormTech's minimum requirements, StormTech products are designed to exceed American Association of State Highway and Transportation Officials (AASHTO) LRFD recommended design factors for Earth loads and Vehicular live loads. AASHTO Vehicular live loads (previously HS-20) consist of two heavy axle configurations, that of a single 32 (142 kN) kip axle and that of tandem 25 (111 kN) kip axles. Factors for impact and multiple presences of vehicles ensure a conservative design where structural adequacy is assumed for a wide range of street legal vehicle weights and axle configurations.

Computer models of the chambers under shallow and deep conditions were developed. Utilizing design forces from computer models, chamber sections were evaluated using AASHTO procedures that consider thrust and moment, and check for local buckling capacity. The procedures also considered the time-dependent strength and stiffness properties of polypropylene and polyethylene. These procedures were developed in a research study conducted by the National Cooperative Highway Research Program (NCHRP) for AASHTO, and published as NCHRP Report 438 Recommended LRFD Specifications for Plastic Pipe and Culverts. *Product Specifications: 2.12.*

StormTech does not recommend installing StormTech products underneath buildings or parking garages. When specifying the StormTech products in close proximity to buildings, it is important to ensure that the StormTech products are not receiving any loads from these structures that may jeopardize the long term performance of the chambers.

3.2 FULL SCALE TESTING

After developing the StormTech chamber designs, the chambers were subjected to rigorous full-scale testing. The test programs verified the predicted safety factors of the designs by subjecting the chambers to more severe load conditions than anticipated during service life. Capacity under live loads and deep fill was investigated by conducting tests with a range of cover depths. Monitoring of long term deep fill installations has been done to validate the long term performance of the StormTech products.

3.3 INDEPENDENT EXPERT ANALYSIS

StormTech worked closely with the consulting firm Simpson Gumpertz & Heger Inc. (SGH) to develop and evaluate the SC-740, SC-310 and DC-780 chamber designs. SGH has world-renowned expertise in the design of buried drainage structures. The firm was the principal investigator for the NCHRP research program that developed the structural analysis and design methods adopted by AASHTO for thermoplastic culverts. SGH conducted design calculations and computer simulations of chamber performance under various installation and live load conditions. They worked with StormTech to design the full-scale test programs to verify the structural capacity of the chambers. SGH also observed all full-scale tests and inspected the chambers after completion of the tests. SGH continues to be StormTech's structural consultant.

3.4 INJECTION MOLDING

To comply with both the structural and design requirements of AASHTO's LRFD specifications and ASTM F 2787 as well as the product requirements of ASTM F 2418 or ASTM F2922, StormTech uses proprietary injection molding equipment to manufacture the chambers and end caps.

In addition to meeting structural goals, injection molding allows StormTech to design added features and advantages into StormTech's parts including:

- Precise control of wall thickness throughout parts
- Precise fit of joints and end caps
- Molded-in inspection port fitting
- Molded-in handles on end caps
- Molded-in pipe guides with blade starter slots
- Repeatability for Quality Control (See Section 3.6)

Product Specifications: 2.1, 3.1 and 3.3

3.5 POLYPROPYLENE AND POLYETHYLENE RESIN

StormTech chambers are injection molded from polypropylene and polyethylene. Polypropylene and polyethylene chambers are inherently resistant to chemicals typically found in stormwater run-off. StormTech chambers maintain a greater portion of their structural stiffness through higher installation and service temperatures.

StormTech polypropylene and polyethylene are virgin materials specially designed to achieve a high 75-year creep modulus that is necessary to provide a sound long-term structural design. Since the modulus remains high well beyond the 75-year value, StormTech chambers can exhibit a service life in excess of 75 years.

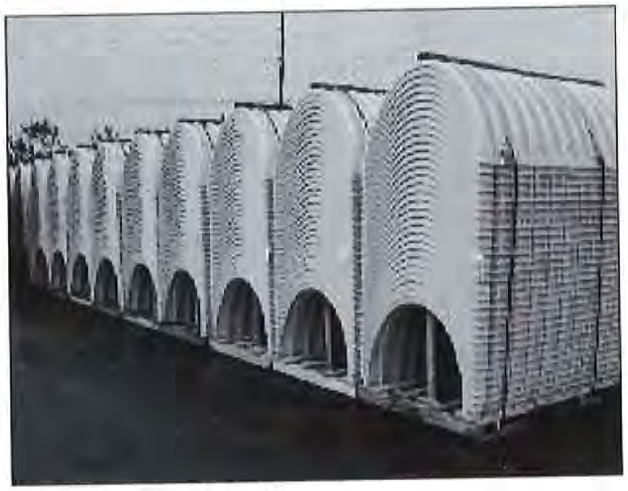

3.6 QUALITY CONTROL

StormTech chambers are manufactured under tight quality control programs. Materials are routinely tested in an environmentally controlled lab that is verified every six months via the external ASTM Proficiency Testing Program. The chamber material properties are measured and controlled with procedures following ISO 9001:2000 requirements.

Statistical Process Control (SPC) techniques are applied during manufacturing. Established upper and lower control limits are maintained on key manufacturing parameters to maintain consistent product.
Product Specifications: 2.13 and 3.6

4.0 Foundation for Chambers

4.1 FOUNDATION REQUIREMENTS

StormTech chamber systems and embedment stone may be installed in various native soil types. The sub-grade bearing capacity and chamber cover height determine the required depth of clean, crushed, angular stone for the chamber foundation. The chamber foundation is the clean, crushed, angular stone placed between the subgrade soils and the feet of the chamber.

As cover height increases (top of chamber to top of finished grade) the chambers foundation requirements increase. Foundation strength is the product of the sub-grade soils bearing capacity and the depth of clean, crushed, angular stone below the chamber foot. **Table 1** for the SC-740 and SC-310 and **Table 2** for the DC-780 specify the required minimum foundation depth for varying cover heights and subgrade bearing capacities.

4.2 WEAKER SOILS

For sub-grade soils with allowable bearing capacity less than 2000 pounds per square foot [(2.0 ksf) (96 kPa)], a geotechnical engineer should evaluate the specific conditions. These soils are often highly variable, may contain organic materials and could be more sensitive to moisture. A geotechnical engineer's recommendations may include increasing the stone foundation, improving the bearing capacity of the sub-grade soils through compaction, replacement, or other remedial measures including the use of geogrids. The use of a thermoplastic liner may also be considered for systems installed in subgrade soils that are highly affected by moisture. The project engineer is responsible for ensuring overall site settlement is within acceptable limits. A geotechnical engineer should always review installation of StormTech chambers on organic soils.

4.3 CHAMBER SPACING OPTION

StormTech always requires a minimum of 6" (150 mm) clear spacing between the feet of chambers rows for the SC-310, SC-740 and DC-780 chambers. However, increasing the spacing between chamber rows may allow the application of StormTech chambers with either less foundation stone or with weaker subgrade soils. This may be a good option where a vertical restriction on site prevents the use of a deeper foundation. Contact StormTech's Technical Service Department for more information on this option. In all cases, StormTech recommends consulting a geotechnical engineer for subgrade soils with a bearing capacity less than 2.0 ksf (96 kPa).

Table 1 – SC-310 and SC-740 Minimum Required Foundation Depth in inches (millimeters)

Cover Ht. ft. (m)	Minimum Required Bearing Resistance for Service Loads ksf (kPa)																					
	4.1 (196)	4.0 (192)	3.9 (187)	3.8 (182)	3.7 (177)	3.6 (172)	3.5 (168)	3.4 (163)	3.3 (158)	3.2 (153)	3.1 (148)	3.0 (144)	2.9 (139)	2.8 (134)	2.7 (129)	2.6 (124)	2.5 (120)	2.4 (115)	2.3 (110)	2.2 (105)	2.1 (101)	2.0 (96)
1.5 (0.46)	6 (152)	6 (152)	6 (152)	6 (152)	6 (152)	6 (152)	6 (152)	6 (152)	6 (152)	6 (152)	6 (152)	6 (152)	9 (229)	9 (229)	9 (229)	9 (229)	9 (229)	12 (305)	12 (305)	12 (305)	15 (381)	15 (381)
2 (0.61)	6 (152)	6 (152)	6 (152)	6 (152)	6 (152)	6 (152)	6 (152)	6 (152)	6 (152)	6 (152)	6 (152)	9 (229)	9 (229)	9 (229)	9 (229)	9 (229)	12 (305)	12 (305)	12 (305)	15 (381)	15 (381)	15 (381)
2.5 (0.76)	6 (152)	6 (152)	6 (152)	6 (152)	6 (152)	6 (152)	6 (152)	6 (152)	6 (152)	6 (152)	9 (229)	9 (229)	9 (229)	9 (229)	9 (229)	12 (305)	12 (305)	12 (305)	15 (381)	15 (381)	15 (381)	18 (457)
3 (0.91)	6 (152)	6 (152)	6 (152)	6 (152)	6 (152)	6 (152)	6 (152)	6 (152)	6 (152)	9 (229)	9 (229)	9 (229)	9 (229)	9 (229)	12 (305)	12 (305)	12 (305)	15 (381)	15 (381)	15 (381)	18 (457)	18 (457)
3.5 (1.07)	6 (152)	6 (152)	6 (152)	6 (152)	6 (152)	6 (152)	6 (152)	6 (152)	9 (229)	9 (229)	9 (229)	9 (229)	9 (229)	12 (305)	12 (305)	12 (305)	12 (305)	15 (381)	15 (381)	18 (457)	18 (457)	21 (533)
4 (1.22)	6 (152)	6 (152)	6 (152)	6 (152)	6 (152)	6 (152)	6 (152)	6 (152)	9 (229)	9 (229)	9 (229)	9 (229)	9 (229)	12 (305)	12 (305)	12 (305)	12 (305)	15 (381)	15 (381)	18 (457)	18 (457)	21 (533)
4.5 (1.37)	6 (152)	6 (152)	6 (152)	6 (152)	6 (152)	6 (152)	6 (152)	6 (152)	9 (229)	9 (229)	9 (229)	9 (229)	9 (229)	12 (305)	12 (305)	12 (305)	12 (305)	15 (381)	15 (381)	18 (457)	18 (457)	21 (533)
5 (1.52)	6 (152)	6 (152)	6 (152)	6 (152)	6 (152)	6 (152)	6 (152)	6 (152)	9 (229)	9 (229)	9 (229)	9 (229)	9 (229)	12 (305)	12 (305)	12 (305)	15 (381)	15 (381)	15 (381)	18 (457)	18 (457)	21 (533)
5.5 (1.68)	6 (152)	6 (152)	6 (152)	6 (152)	6 (152)	6 (152)	6 (152)	9 (229)	9 (229)	9 (229)	9 (229)	9 (229)	12 (305)	12 (305)	12 (305)	12 (305)	15 (381)	15 (381)	15 (381)	18 (457)	18 (457)	21 (533)
6 (1.83)	6 (152)	6 (152)	6 (152)	6 (152)	6 (152)	6 (152)	9 (229)	9 (229)	9 (229)	9 (229)	9 (229)	12 (305)	12 (305)	12 (305)	12 (305)	15 (381)	15 (381)	15 (381)	18 (457)	18 (457)	21 (533)	21 (533)
6.5 (1.98)	6 (152)	6 (152)	6 (152)	6 (152)	6 (152)	9 (229)	9 (229)	9 (229)	9 (229)	9 (229)	9 (229)	12 (305)	12 (305)	12 (305)	15 (381)	15 (381)	15 (381)	18 (457)	18 (457)	18 (457)	21 (533)	24 (610)
7 (2.13)	6 (152)	6 (152)	6 (152)	6 (152)	9 (229)	9 (229)	9 (229)	9 (229)	9 (229)	9 (229)	12 (305)	12 (305)	12 (305)	12 (305)	15 (381)	15 (381)	15 (381)	18 (457)	18 (457)	21 (533)	21 (533)	24 (610)
7.5 (2.29)	6 (152)	6 (152)	6 (152)	9 (229)	9 (229)	9 (229)	9 (229)	9 (229)	12 (305)	12 (305)	12 (305)	12 (305)	12 (305)	15 (381)	15 (381)	15 (381)	18 (457)	18 (457)	21 (533)	21 (533)	24 (610)	27 (686)
8 (2.44)	6 (152)	9 (229)	9 (229)	9 (229)	9 (229)	9 (229)	9 (229)	12 (305)	12 (305)	12 (305)	12 (305)	12 (305)	15 (381)	15 (381)	15 (381)	18 (457)	18 (457)	21 (533)	21 (533)	24 (610)	24 (610)	27 (686)

NOTE: The design engineer is solely responsible for assessing the bearing resistance (allowable bearing capacity) of the subgrade soils and determining the depth of foundation stone. Subgrade bearing resistance should be assessed with consideration for the range of soil moisture conditions expected under a stormwater system.

4.0 Foundation for Chambers/5.0 Cumulative Storage Volumes

Table 2 – DC-780 Minimum Required Foundation Depth in inches (millimeters)

Cover Ht. ft. (m)	Minimum Required Bearing Resistance for Service Loads ksf (kPa)																						
	4.1 (196)	4.0 (192)	3.9 (187)	3.8 (182)	3.7 (177)	3.6 (172)	3.5 (168)	3.4 (163)	3.3 (158)	3.2 (153)	3.1 (148)	3.0 (144)	2.9 (139)	2.8 (134)	2.7 (129)	2.6 (124)	2.5 (120)	2.4 (115)	2.3 (110)	2.2 (105)	2.1 (101)	2.0 (96)
8.5 (2.59)	9 (229)	9 (229)	9 (229)	9 (229)	9 (229)	9 (229)	12 (305)	12 (305)	12 (305)	12 (305)	12 (305)	15 (381)	15 (381)	15 (381)	18 (457)	18 (457)	18 (457)	21 (533)	24 (610)	24 (610)	27 (686)	30 (762)
9.0 (2.74)	9 (229)	9 (229)	9 (229)	9 (229)	9 (229)	12 (305)	12 (305)	12 (305)	12 (305)	12 (305)	15 (381)	15 (381)	15 (381)	18 (457)	18 (457)	18 (457)	21 (533)	21 (533)	24 (610)	24 (610)	27 (686)	30 (762)
9.5 (2.90)	9 (229)	9 (229)	9 (229)	9 (229)	12 (305)	12 (305)	12 (305)	12 (305)	12 (305)	15 (381)	15 (381)	15 (381)	18 (457)	18 (457)	18 (457)	21 (533)	21 (533)	24 (610)	24 (610)	27 (686)	30 (762)	33 (838)
10.0 (3.05)	9 (229)	9 (229)	12 (305)	12 (305)	12 (305)	12 (305)	12 (305)	15 (381)	15 (381)	15 (381)	15 (381)	18 (457)	18 (457)	18 (457)	21 (533)	21 (533)	24 (610)	24 (610)	27 (686)	30 (762)	33 (838)	36 (915)
10.5 (3.20)	9 (229)	12 (305)	12 (305)	12 (305)	12 (305)	12 (305)	15 (381)	15 (381)	15 (381)	15 (381)	18 (457)	18 (457)	18 (457)	21 (533)	21 (533)	24 (610)	24 (610)	27 (686)	30 (762)	30 (762)	33 (838)	36 (915)
11.0 (3.35)	12 (305)	12 (305)	12 (305)	12 (305)	12 (305)	15 (381)	15 (381)	15 (381)	15 (381)	18 (457)	18 (457)	18 (457)	21 (533)	21 (533)	24 (610)	24 (610)	27 (686)	27 (686)	30 (762)	33 (838)	36 (915)	39 (991)
11.5 (3.50)	12 (305)	12 (305)	12 (305)	12 (305)	15 (381)	15 (381)	15 (381)	15 (381)	18 (457)	18 (457)	18 (457)	21 (533)	21 (533)	24 (610)	24 (610)	27 (686)	27 (686)	30 (762)	33 (838)	36 (915)	39 (991)	42 (1067)
12.0 (3.66)	12 (305)	12 (305)	12 (305)	15 (381)	15 (381)	15 (381)	15 (381)	18 (457)	18 (457)	18 (457)	21 (533)	21 (533)	21 (533)	24 (610)	24 (610)	27 (686)	30 (762)	30 (762)	33 (838)	36 (915)	39 (991)	42 (1067)

NOTE: The design engineer is solely responsible for assessing the bearing resistance (allowable bearing capacity) of the subgrade soils and determining the depth of foundation stone. Subgrade bearing resistance should be assessed with consideration for the range of soil moisture conditions expected under a stormwater system.

Tables 3, 4 and **5** provide cumulative storage volumes for the SC-310, SC-740 and DC-780 chamber systems. This information may be used to calculate a detention/retention system's stage storage volume. A spreadsheet is available at www.stormtech.com in which the number of chambers can be input for quick cumulative storage calculations. *Product Specifications: 1.1, 2.2, 2.3, 2.4, and 2.6*

Table 3 - SC-310 Cumulative Storage Volumes Per Chamber
Assumes 40% Stone Porosity. Calculations are Based Upon a 6" (150 mm) Stone Base Under the Chambers.

Depth of Water in System Inches (mm)	Cumulative Chamber Storage ft³ (m³)	Total System Cumulative Storage ft³ (m³)
28 (711)	14.70 (0.416)	31.00 (0.878)
27 (686)	14.70 (0.416)	30.21 (0.855)
26 (680)	Stone 14.70 (0.416)	29.42 (0.833)
25 (610)	Cover 14.70 (0.416)	28.63 (0.811)
24 (609)	14.70 (0.416)	27.84 (0.788)
23 (584)	14.70 (0.416)	27.05 (0.766)
22 (559)	14.70 (0.416)	26.26 (0.748)
21 (533)	14.64 (0.415)	25.43 (0.720)
20 (508)	14.49 (0.410)	24.54 (0.695)
19 (483)	14.22 (0.403)	23.58 (0.668)
18 (457)	13.68 (0.387)	22.47 (0.636)
17 (432)	12.99 (0.368)	21.25 (0.602)

Table 3 - SC-310 Cumulative Storage Volumes (cont.)

Depth of Water in System Inches (mm)	Cumulative Chamber Storage ft³ (m³)	Total System Cumulative Storage ft³ (m³)
16 (406)	12.17 (0.345)	19.97 (0.566)
15 (381)	11.25 (0.319)	18.62 (0.528)
14 (356)	10.23 (0.290)	17.22 (0.488)
13 (330)	9.15 (0.260)	15.78 (0.447)
12 (305)	7.99 (0.227)	14.29 (0.425)
11 (279)	6.78 (0.192)	12.77 (0.362)
10 (254)	5.51 (0.156)	11.22 (0.318)
9 (229)	4.19 (0.119)	9.64 (0.278)
8 (203)	2.83 (0.081)	8.03 (0.227)
7 (178)	1.43 (0.041)	6.40 (0.181)
6 (152)	0	4.74 (0.134)
5 (127)	0	3.95 (0.112)
4 (102)	Stone 0	3.16 (0.090)
3 (76)	Foundation 0	2.37 (0.067)
2 (51)	0	1.58 (0.046)
1 (25)	0	0.79 (0.022)

Note: Add 0.79 ft³ (0.022 m³) of storage for each additional inch (25 mm) of stone foundation.

5.0 Cumulative Storage Volumes

TABLE 4 – SC-740 Cumulative Storage Volumes Per Chamber
Assumes 40% Stone Porosity. Calculations are Based Upon a 6" (150 mm) Stone Base Under the Chambers.

Depth of Water in System Inches (mm)	Cumulative Chamber Storage Ft³ (m³)	Total System Cumulative Storage Ft³ (m³)
42 (1067)	45.90 (1.300)	74.90 (2.121)
41 (1041)	45.90 (1.300)	73.77 (2.089)
40 (1016)	Stone 45.90 (1.300)	72.64 (2.057)
39 (991)	Cover 45.90 (1.300)	71.52 (2.025)
38 (965)	45.90 (1.300)	70.39 (1.993)
37 (948)	45.90 (1.300)	69.26 (1.961)
36 (914)	45.90 (1.300)	68.14 (1.929)
35 (889)	45.85 (1.298)	66.98 (1.897)
34 (864)	45.69 (1.294)	65.75 (1.862)
33 (838)	45.41 (1.286)	64.46 (1.825)
32 (813)	44.81 (1.269)	62.97 (1.783)
31 (787)	44.01 (1.246)	61.36 (1.737)
30 (762)	43.06 (1.219)	59.66 (1.689)
29 (737)	41.98 (1.189)	57.89 (1.639)
28 (711)	40.80 (1.155)	56.05 (1.587)
27 (686)	39.54 (1.120)	54.17 (1.534)
26 (660)	38.18 (1.081)	52.23 (1.479)
25 (635)	36.74 (1.040)	50.23 (1.422)
24 (610)	35.22 (0.977)	48.19 (1.365)
23 (584)	33.64 (0.953)	46.11 (1.306)
22 (559)	31.99 (0.906)	44.00 (1.246)
21 (533)	30.29 (0.858)	41.85 (1.185)
20 (508)	28.54 (0.808)	39.67 (1.123)
19 (483)	26.74 (0.757)	37.47 (1.061)
18 (457)	24.89 (0.705)	35.23 (0.997)
17 (432)	23.00 (0.651)	32.96 (0.939)
16 (406)	21.06 (0.596)	30.68 (0.869)
15 (381)	19.09 (0.541)	28.36 (0.803)
14 (356)	17.08 (0.484)	26.03 (0.737)
13 (330)	15.04 (0.426)	23.68 (0.670)
12 (305)	12.97 (0.367)	21.31 (0.608)
11 (279)	10.87 (0.309)	18.92 (0.535)
10 (254)	8.74 (0.247)	16.51 (0.468)
9 (229)	6.58 (0.186)	14.09 (0.399)
8 (203)	4.41 (0.125)	11.66 (0.330)
7 (178)	2.21 (0.063)	9.21 (0.264)
6 (152)	0	6.76 (0.191)
5 (127)	0	5.63 (0.160)
4 (102)	Stone 0	4.51 (0.125)
3 (76)	Foundation 0	3.38 (0.095)
2 (51)	0	2.25 (0.064)
1 (25)	0	1.13 (0.032)

Note: Add 1.13 ft³ (0.032 m³) of storage for each additional inch (25 mm) of stone foundation.

Table 5 - DC-780 Cumulative Storage Volumes Per Chamber
Assumes 40% Stone Porosity. Calculations are Based Upon a 9" (230 mm) Stone Base Under the Chambers.

Depth of Water in System Inches (mm)	Cumulative Chamber Storage Ft³ (m³)	Total System Cumulative Storage Ft³ (m³)
45 (1143)	46.27 (1.310)	78.47 (2.222)
44 (1118)	46.27 (1.310)	77.34 (2.190)
43 (1092)	Stone 46.27 (1.310)	76.21 (2.158)
42 (1067)	Cover 46.27 (1.310)	75.09 (2.126)
41 (1041)	46.27 (1.310)	73.96 (2.094)
40 (1016)	46.27 (1.310)	72.83 (2.062)
39 (991)	46.27 (1.310)	71.71 (2.030)
38 (965)	46.21 (1.309)	70.54 (1.998)
37 (940)	46.04 (1.304)	69.32 (1.963)
36 (914)	45.76 (1.296)	68.02 (1.926)
35 (889)	45.15 (1.278)	66.53 (1.884)
34 (864)	44.34 (1.255)	64.91 (1.838)
33 (838)	43.38 (1.228)	63.21 (1.790)
32 (813)	42.29 (1.198)	61.43 (1.740)
31 (787)	41.11 (1.164)	59.59 (1.688)
30 (762)	39.83 (1.128)	57.70 (1.634)
29 (737)	38.47 (1.089)	55.76 (1.579)
28 (711)	37.01 (1.048)	53.76 (1.522)
27 (686)	35.49 (1.005)	51.72 (1.464)
26 (660)	33.90 (0.960)	49.63 (1.405)
25 (635)	32.24 (0.913)	47.52 (1.346)
24 (610)	30.54 (0.865)	45.36 (1.285)
23 (584)	28.77 (0.815)	43.18 (1.223)
22 (559)	26.96 (0.763)	40.97 (1.160)
21 (533)	25.10 (0.711)	38.72 (1.096)
20 (508)	23.19 (0.657)	36.45 (1.032)
19 (483)	21.25 (0.602)	34.16 (0.967)
18 (457)	19.26 (0.545)	31.84 (0.902)
17 (432)	17.24 (0.488)	29.50 (0.835)
16 (406)	15.19 (0.430)	27.14 (0.769)
15 (381)	13.10 (0.371)	24.76 (0.701)
14 (356)	10.98 (0.311)	22.36 (0.633)
13 (330)	8.83 (0.250)	19.95 (0.565)
12 (305)	6.66 (0.189)	17.52 (0.496)
11 (279)	4.46 (0.126)	15.07 (0.427)
10 (254)	2.24 (0.064)	12.61 (0.357)
9 (229)	0	10.14 (0.287)
8 (203)	0	9.01 (0.255)
7 (178)	Stone 0	7.89 (0.223)
6 (152)	Foundation 0	6.76 (0.191)
5 (127)	0	5.63 (0.160)
4 (102)	0	4.51 (0.128)
3 (76)	0	3.38 (0.096)
2 (51)	0	2.25 (0.064)
1 (25)	0	1.13 (0.032)

Note: Add 1.13 cu. ft. (0.032 m³) of storage for each additional inch (25 mm) of stone foundation.

StormTech

6.1 CHAMBER ROW SEPARATION

StormTech SC-740, SC-310 and DC-780 chambers must be specified with a minimum 6" (150 mm) space between the feet of adjacent parallel chamber rows. Increasing the space between rows is acceptable. This will increase the storage volume due to additional stone voids.

6.2 STONE SURROUNDING CHAMBERS

Refer to **Table 6** for acceptable stone materials. StormTech requires clean, crushed, angular stone below, between and above chambers as shown in **Figure 6**. Acceptable gradations are listed in **Table 6.** Subrounded and rounded stone are not acceptable.

6.3 GEOTEXTILE SEPARATION REQUIREMENT

A non-woven geotextile that meets AASHTO M288 Class 2 Separation requirements must be applied as a separation layer to prevent soil intrusion into the clean, crushed, angular stone as shown in **Figure 6**. The geotextile is required between the clean, crushed, angular stone and the subgrade soils, the excavation's sidewalls and the fill materials. The geotextile should completely envelope the clean, crushed, angular stone. Overlap adjacent geotextile rolls per AASHTO M288 separation guidelines. Contact StormTech for a list of acceptable geotextiles.

6.4 FILL ABOVE CHAMBERS

Refer to **Table 6** and **Figure 6** for acceptable fill material above the 6" (150 mm) of clean, crushed, angular stone. Minimum and maximum fill requirements for the SC-740, SC-310 and DC-780 chambers are shown in **Figure 6** below. StormTech requires a minimum of 24" (600 mm) of fill in non-paved installations where rutting from vehicles may occur. **Table 6** provides details on soil class and compaction requirements for suitable fill materials.

Table 6 – Acceptable Fill Materials

	MATERIAL LOCATION	DESCRIPTION	AASHTO MATERIAL CLASSIFICATIONS	COMPACTION / DENSITY REQUIREMENT
D	**FINAL FILL:** FILL MATERIAL FOR LAYER 'D' STARTS FROM THE TOP OF THE 'C' LAYER TO THE BOTTOM OF FLEXIBLE PAVEMENT OR UNPAVED FINISHED GRADE ABOVE. NOTE THAT PAVEMENT SUBBASE MAY BE PART OF THE 'D' LAYER	ANY SOIL/ROCK MATERIALS, NATIVE SOILS, OR PER ENGINEER'S PLANS. CHECK PLANS FOR PAVEMENT SUBGRADE REQUIREMENTS.	N/A	PREPARE PER SITE DESIGN ENGINEER'S PLANS. PAVED INSTALLATIONS MAY HAVE STRINGENT MATERIAL AND PREPARATION REQUIREMENTS.
C	**INITIAL FILL:** FILL MATERIAL FOR LAYER 'C' STARTS FROM THE TOP OF THE EMBEDMENT STONE ('B' LAYER) TO 18" (450 mm) ABOVE THE TOP OF THE CHAMBER. NOTE THAT PAVEMENT SUBBASE MAY BE A PART OF THE 'C' LAYER.	GRANULAR WELL-GRADED SOIL/AGGREGATE MIXTURES, <35% FINES OR PROCESSED AGGREGATE. MOST PAVEMENT SUBBASE MATERIALS CAN BE USED IN LIEU OF THIS LAYER.	AASHTO M145[1] A-1, A-2-4, A-3 OR AASHTO M43[1] 3, 357, 4, 467, 5, 56, 57, 6, 67, 68, 7, 78, 8, 89, 9, 10	BEGIN COMPACTIONS AFTER 12" (300 mm) OF MATERIAL OVER THE CHAMBERS IS REACHED. COMPACT ADDITIONAL LAYERS IN 6" (150 mm) MAX LIFTS TO A MIN. 95% PROCTOR DENSITY FOR WELL GRADED MATERIAL AND 95% RELATIVE DENSITY FOR PROCESSED AGGREGATE MATERIALS. ROLLER GROSS VEHICLE WEIGHT NOT TO EXCEED 12,000 lbs (53 kN). DYNAMIC FORCE NOT TO EXCEED 20,000 lbs (89 kN).
B	**EMBEDMENT STONE:** FILL SURROUNDING THE CHAMBERS FROM THE FOUNDATION STONE ('A' LAYER) TO THE 'C' LAYER ABOVE.	CLEAN, CRUSHED, ANGULAR STONE, NOMINAL SIZE DISTRIBUTION BETWEEN 3/4-2 INCH (20-50 mm)	AASHTO M43[1] 3, 357, 4, 467, 5, 56, 57	NO COMPACTION REQUIRED.
A	**FOUNDATION STONE:** FILL BELOW CHAMBERS FROM THE SUBGRADE UP TO THE FOOT (BOTTOM) OF THE CHAMBER.	CLEAN, CRUSHED, ANGULAR STONE, NOMINAL SIZE DISTRIBUTION BETWEEN 3/4-2 INCH (20-50 mm)	AASHTO M43[1] 3, 357, 4, 467, 5, 56, 57	PLATE COMPACT OR ROLL TO ACHIEVE A FLAT SURFACE. [2,3]

PLEASE NOTE:

1. THE LISTED AASHTO DESIGNATIONS ARE FOR GRADATIONS ONLY. THE STONE MUST ALSO BE CLEAN, CRUSHED, ANGULAR. FOR EXAMPLE, A SPECIFICATION FOR #4 STONE WOULD STATE: "CLEAN, CRUSHED, ANGULAR NO. 4 (AASHTO M43) STONE".
2. STORMTECH COMPACTION REQUIREMENTS ARE MET FOR 'A' LOCATION MATERIALS WHEN PLACED AND COMPACTED IN 6" (150 mm) (MAX) LIFTS USING TWO FULL COVERAGES WITH A VIBRATORY COMPACTOR.
3. WHERE INFILTRATION SURFACES MAY BE COMPROMISED BY COMPACTION, FOR STANDARD DESIGN LOAD CONDITIONS, A FLAT SURFACE MAY BE ACHIEVED BY RAKING OR DRAGGING WITHOUT COMPACTION EQUIPMENT. FOR SPECIAL LOAD DESIGNS, CONTACT STORMTECH FOR COMPACTION REQUIREMENTS.

Figure 6 – Fill Material Locations

Once layer 'C' is placed any soil/material can be placed in layer 'D' up to the finished grade. Most pavement subbase soils can be used to replace the materials requirements of layer 'C' or 'D' at the design engineer's discretion.

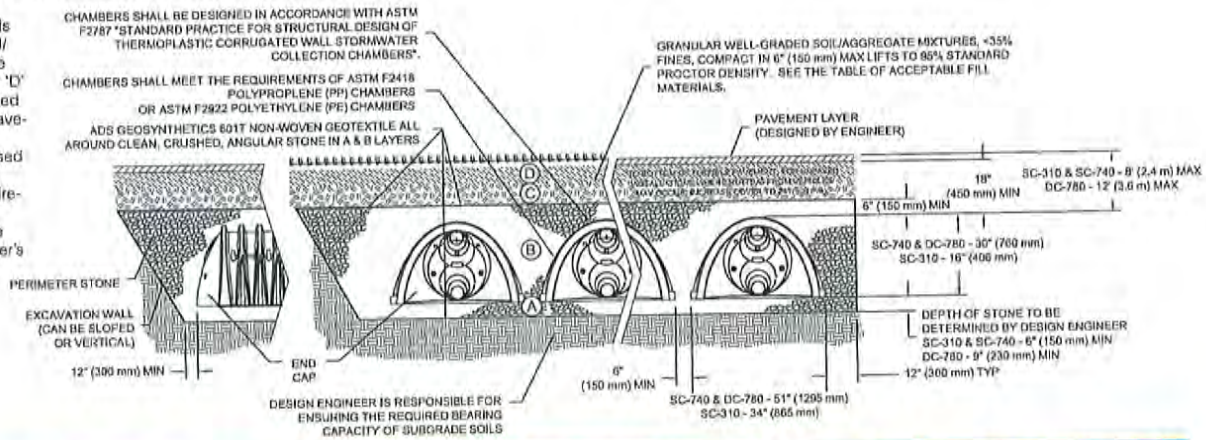

7.0 Inletting the Chambers

The design flexibility of a StormTech chamber system includes many inletting possibilities. Contact StormTech's Technical Service Department for guidance on designing an inlet system to meet specific site goals.

7.1 TREATMENT TRAIN

A properly designed inlet system can ensure good water quality, easy inspection and maintenance, and a long system service life. StormTech recommends a treatment train approach for inletting an underground stormwater management system under a typical commercial parking area. *Treatment train* is an industry term for a multi-tiered water quality network. As shown in **Figure 7**, a StormTech recommended inlet system can inexpensively have tiers of treatment upstream of the StormTech chambers:

Tier 1 – Pre-treatment (BMP)
Tier 2 - StormTech Isolator® Row
Tier 3 - Enhanced Treatment (BMP)

Figure 7 – Typical StormTech Treatment Train Inlet System

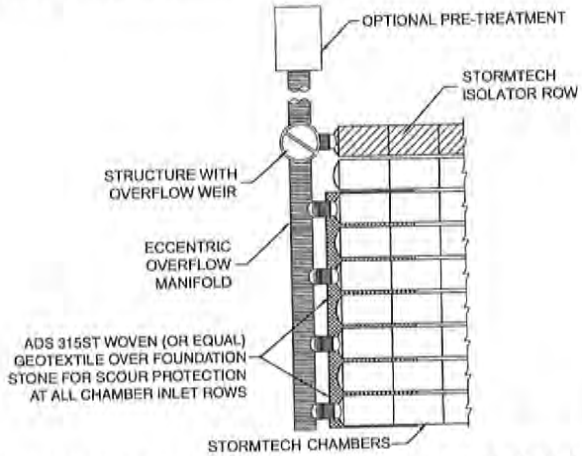

7.2 PRE-TREATMENT (BMP) – TREATMENT TIER 1

In some areas pre-treatment of the stormwater is required prior to entry into a stormwater system. By treating the stormwater prior to entry into the system, the service life of the system can be extended, pollutants such as hydrocarbons may be captured, and local regulations met. Pre-treatment options are often described as a Best Management Practice or simply a BMP.

Pre-treatment devices differ greatly in complexity, design and effectiveness. Depending on a site's characteristics and treatment goals, the simple, least expensive pre-treatment solutions can sometimes be just as effective as the complex systems. Options include a simple deep sumped manhole with a 90° bend on its outlet, baffle boxes, swirl concentrators, and devices that combine these processes. Some of the most effective pre-treatment options combine engineered site grading with vegetation such as bio-swales or grassy strips.

The type of pretreatment device specified as the first level of treatment up-stream of a StormTech chamber system can vary greatly throughout the country and from site-to-site. It is the responsibility of the design engineer to understand the water quality requirements and design a stormwater treatment system that will satisfy local regulators and follow applicable laws. A design engineer should apply their understanding of local weather conditions, site topography, local maintenance requirements, expected service life, etc...to select an appropriate stormwater pre-treatment system.

7.3 STORMTECH ISOLATOR ROW – TREATMENT TIER 2

StormTech has a patented technique to inexpensively enhance Total Suspended Solids (TSS) removal and provide easy access for inspection and maintenance. The StormTech Isolator Row is a row of standard StormTech chambers surrounded with appropriate filter fabrics and connected to a manhole for easy access. This application basically creates a filter/detention basin that allows water to egress through the surrounding filter fabric while sediment is trapped within. It may be best to think of the Isolator Row as a first-flush treatment device. *First-Flush* is a term typically used to describe the first ½" to 1" (13-25 mm) of rainfall or runoff on a site. The majority of stormwater pollutants are carried in the sediments of the first-flush, therefore the Isolator Row is an effective component of a treatment train.

The StormTech Isolator Row should be designed with a manhole with an overflow weir at its upstream end. The diversion manhole is multi-purposed. It can provide access to the Isolator Row for both inspection and maintenance and acts as a diversion structure. The manhole is connected to the Isolator Row with a short length of 12" (300 mm) pipe for the SC-310 chamber and 24" (600 mm) pipe for the SC-740 and DC-780 chambers. These pipes are connected to the Isolator Row with a 12" (300 mm) fabricated end cap for the SC-310 chamber and a 24" (600 mm) fabricated end cap for the SC-740 and DC-780 chambers. The overflow weir typically has its crest set between the top of the chamber and its midpoint. This allows stormwater in excess of the Isolator Row's storage/conveyance capacity to bypass into the chamber system through the downstream manifold system.

Specifying and installing proper geotextiles is essential for efficient operation and to prevent damage to the system during the JetVac maintenance process. In a typical configuration, two strips of woven geotextile that meet AASHTO M288 Class 1 requirements are required between the chambers and the stone foundation. This strong filter fabric traps sediments and protects the stone base during maintenance. A strip of non-woven

Figure 8 – StormTech Isolator Row Detail

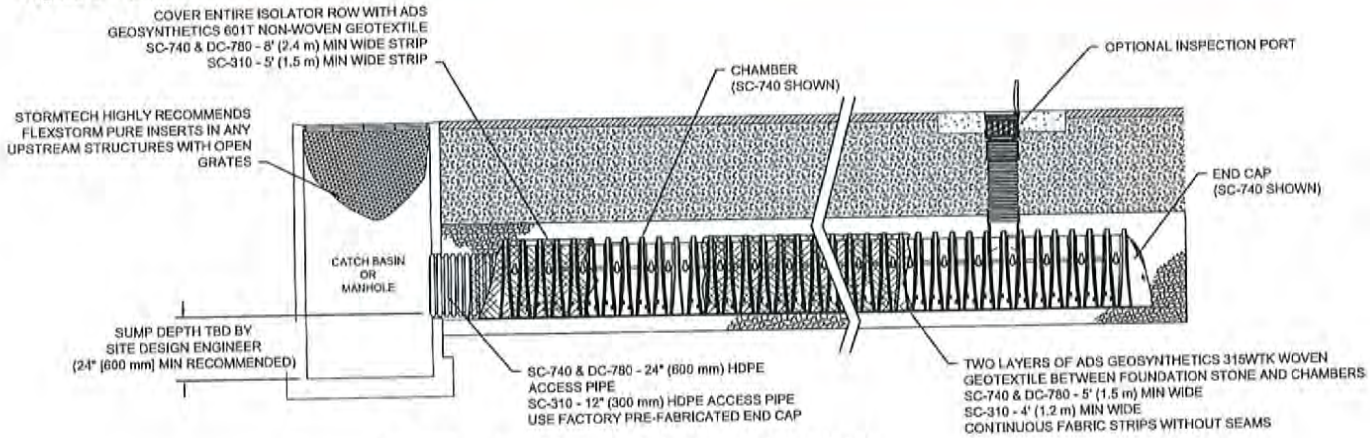

Note: Non-woven geotextile over DC-780 Isolator Row chambers is not required.

AASHTO M288 Class 2 geotextile is draped over the Isolator chamber row. This 6-8 oz. (217-278 g/m²) non-woven filter fabric prevents sediments from migrating out of the chamber perforations while allowing modest amounts of water to flow out of the Isolator Row. **Figure 8** is a detail of the Isolator Row that shows proper application of the geotextiles. Contact StormTech for a table of acceptable geotextiles.

Inspection is easily accomplished through the upstream manhole or optional inspection ports. Maintenance of an Isolator Row is fast and easy using the JetVac process through the upstream manhole. Section 12.0 explains the inspection and maintenance process in more detail.

Isolator Rows can be sized to accommodate either a water quality volume or a water quality flow rate requirement. The use of filter fabric around the Isolator Row chambers allows stormwater to egress out of the row during and between storm events. The rate of egression for design is dependent upon the chamber model and sediment accumulation on the geotextile. Contact StormTech's Technical Services Department for more information on Isolator Row sizing.

7.4 ENHANCED TREATMENT (BMP) – TREATMENT TIER 3

As regulations have become more stringent, requiring higher levels of containment removal, water quality systems may be required to treat higher flow rates, greater volumes or to provide a higher level of filtration or other more sophisticated treatment process. StormTech systems can easily be configured with enhanced treatment techniques located either upstream or down stream of the retention or detention chamber system. Located upstream of an infiltration bed, between the pretreatment device and the Isolator Row, enhanced treatment provides a high level of contaminant removal which protects groundwater or better preserves the infiltration surface. Located downstream of detention, enhanced treatment provides a higher level of contaminant removal prior to discharge to a receiving body.

Enhanced treatment BMPs are normally applied where specific regulations and specific water quality product approvals are in place. StormTech works closely with providers of enhanced treatment technologies to meet local requirements.

7.5 TREATMENT TRAIN CONCLUSION

The treatment train is a highly effective water-quality approach that may not add significant cost to a StormTech system being installed under commercial parking areas. The StormTech Isolator Row adds a significant level of treatment, easy inspection and maintenance, while maintaining storage volume credit for the cost of a modest amount of geotextile. Finally where higher levels of treatment are required, StormTech can integrate other technologies into the treatment train to provide the most cost effective treatment approach. This treatment train concept provides three levels of treatment, inspection and maintenance upstream and downsstream of the StormTech detention/retention bed.

7.0 Inletting the Chambers

7.6 OTHER INLET OPTIONS

While the three-tiered treatment train approach is the recommended method of inletting StormTech chambers for typical under-commercial parking applications, there are other effective inlet methods that may be considered. For instance, Isolator Rows, while adding an inexpensive level of confidence, are not always necessary. A header system with fewer inlets can be designed to further minimize the cost of a StormTech system. There may be applications where stormwater pre-treatment may not be necessary at all and the system can be inlet directly from the source. Contact StormTech's Technical Service Department to discuss inlet options.

7.7 LATERAL FLOW RATES

The embedment stone surrounding the StormTech chambers allows the rapid conveyance of stormwater between chamber rows. Stormwater will rise and fall evenly within a bed of chambers. A single StormTech SC-740 chamber is able to release or accept stormwater at a rate of at least 0.5 cfs (14.2 l/s) through the surrounding stone.

7.8 INLETTING PERPENDICULAR TO A ROW OF CHAMBERS WITH INSERTA TEE

There is an easy, inexpensive method to perpendicularly inlet a row of chambers. Simply connect the inlet directly to the chamber with an Inserta Tee. **Figure 9** shows a typical detail along with the standard sizes offered for each chamber model.

Figure 9 – Inserta Tee Detail

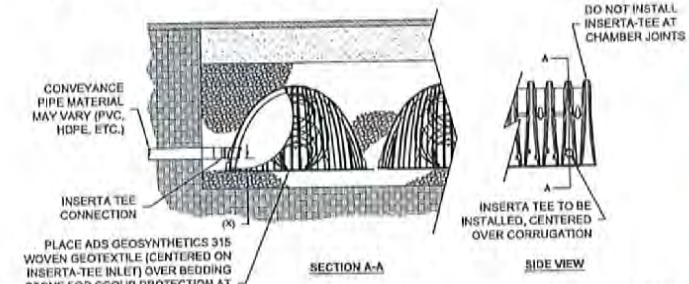

CHAMBER	MAX DIAMETER OF INSERTA TEE	HEIGHT FROM BASE OF CHAMBER (X)
SC-310	6" (150 mm)	4" (100 mm)
SC-740	10" (250 mm)	4" (100 mm)
DC-780	10" (250 mm)	4" (100 mm)
INSERTA TEE FITTINGS AVAILABLE FOR SDR 26, SDR 35, SCH 40 IPS GASKETED & SOLVENT WELD, N-12, HP STORM, C-900 OR DUCTILE IRON		

NOTE:
PART NUMBERS WILL VARY BASED ON INLET PIPE MATERIALS. CONTACT STORMTECH FOR MORE INFORMATION.

7.9 MAXIMUM INLET PIPE VELOCITIES TO PREVENT SCOURING OF THE STONE FOUNDATION

The primary function of the inlet manifold is to convey and distribute flows to a sufficient number of rows in the chamber bed such that there is ample conveyance capacity to pass the peak flows without creating an unacceptable backwater condition in upstream piping or scour the foundation stone under the chambers.

Manifolds are connected to the end caps either at the top or bottom of the end cap. High inlet flow rates from either connection location produce a shear scour potential of the foundation stone. Inlet flows from top inlets also produce impingement scour potential. Scour potential is reduced when standing water is present over the foundation stone. However, for safe design across the wide range of applications, StormTech assumes minimal standing water at the time the design flow occurs.

To minimize scour potential, StormTech recommends the installation of woven scour protection fabric at each inlet row. This enables a protected transition zone from the concentrated flow coming out of the inlet pipe to a uniform flow across the entire width of the chamber for both top and bottom connections. Allowable flow rates for design are dependent upon: the elevation of inlet pipe, foundation stone size and scour protection. An appropriate scour protection geotextile is installed from the end cap to at least 10.5' (3.2 m) for the SC-310, SC-740 and DC 780 chambers for both top and bottom feeding inlet pipes.

See StormTech's Tech Sheet #7 for guidance on manifold sizing. ADS's Technical Services department can also assist with sizing inlet manifolds for the StormTech chamber systems.

Table 7A – Standard distances from base of chamber to invert of inlet and outlet manifolds on StormTech end caps.

SC-310 ENDCAPS				
	PIPE DIA.	INV. (IN)	INV. (FT)	INV. (MM)
TOP	6" (150 mm)	5.8"	0.48	146
TOP	8" (200 mm)	3.5"	0.29	88
TOP	10" (250 mm)	1.4"	0.12	37
BOTTOM	6" (150 mm)	0.5"	0.04	12
BOTTOM	8" (200 mm)	0.6"	0.05	15
BOTTOM	10" (250 mm)	0.7"	0.06	18
BOTTOM	12" (300 mm)	0.9"	0.08	24

SC-740 / DC-780 ENDCAPS				
	PIPE DIA.	INV. (IN)	INV. (FT)	INV. (MM)
TOP	6" (150 mm)	18.5"	1.54	469
TOP	8" (200 mm)	16.5"	1.38	421
TOP	10" (250 mm)	14.5"	1.21	369
TOP	12" (300 mm)	12.5"	1.04	317
TOP	15" (375 mm)	9"	0.75	229
TOP	18" (450 mm)	5"	0.42	128
BOTTOM	6" (150 mm)	0.5"	0.04	12
BOTTOM	8" (200 mm)	0.6"	0.05	15
BOTTOM	10" (250 mm)	0.7"	0.06	18
BOTTOM	12" (300 mm)	1.2"	0.10	30
BOTTOM	15" (375 mm)	1.3"	0.11	34
BOTTOM	18" (450 mm)	1.6"	0.13	40
BOTTOM	24" (600 mm)	0.1"	0.01	3

See StormTech's Tech Sheet #7 for manifold sizing guidance

8.0 OUTLETS FOR STORMTECH CHAMBER SYSTEMS

The majority of StormTech installations are detention systems and have some type of outlet structure. An outlet manifold is generally designed to ensure that peak flows can be conveyed to the outlet structure.

To drain the system completely, an underdrain system is located at or below the bottom of the foundation stone. Some beds may be designed with a pitched base to ensure complete drainage of the system. A grade of ½% is usually satisfactory.

An outlet pipe may be located at a higher invert within a bed. This allows a designed volume of water to infiltrate while excess volumes are outlet as necessary. This is an excellent method of recharging groundwater, replicating a site's pre-construction hydraulics.

Depending on the bed layout and inverts, outlet pipes should be placed in the embedment stone along the bed's perimeter as shown in **Figures 10** and **11**. Solid outlet pipes should also be used to penetrate the StormTech end caps at the designed outlet invert as shown in **Figure 12**. An Isolator Row should not be directly penetrated with an outlet pipe. For systems requiring higher outlet flow rates, a combination of connections may be utilized as shown in **Figure 13**.

In detention and retention applications the discharge of water from the stormwater management system is determined based on the hydrology of the area and the hydraulic design of the system. It is the design engineer's responsibility to design an outlet system that meets their hydraulic objectives while following local laws and regulations.

Table 7B – Maximum outlet flow rate capacities from StormTech manifolds.

OUTLET FLOW		
PIPE DIA.	**FLOW (CFS)**	**FLOW (L/S)**
6" (150 mm)	0.4	11.3
8" (200 mm)	0.7	19.8
10" (250 mm)	1.0	28.3
12" (300 mm)	2.0	56.6
15" (375 mm)	2.7	76.5
18" (450 mm)	4.0	113.3
24" (600 mm)	7.0	198.2
30" (750 mm)	11.0	311.5
36" (900 mm)	16.0	453.1
42" (1050 mm)	22.0	623.0
48" (1200 mm)	28.0	792.9

Figure 10 – Underdrain Parallel

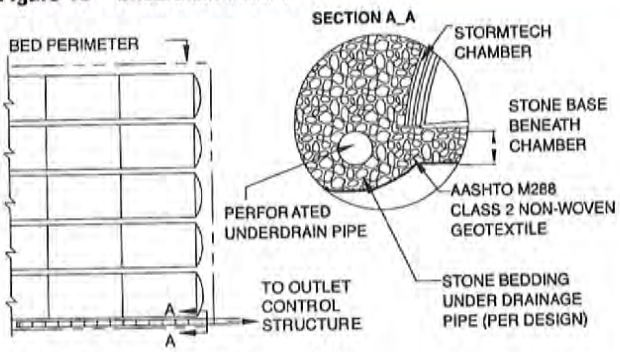

Figure 11 – Underdrain Perpendicular

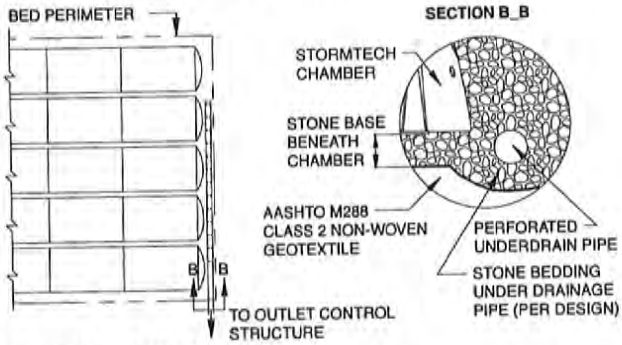

Figure 12 – Outlet Manifold

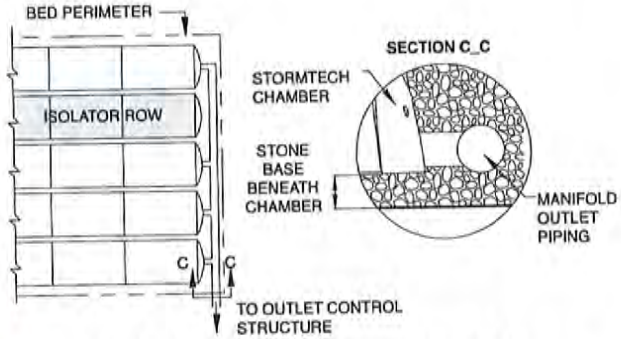

Figure 13 – Combination Outlet

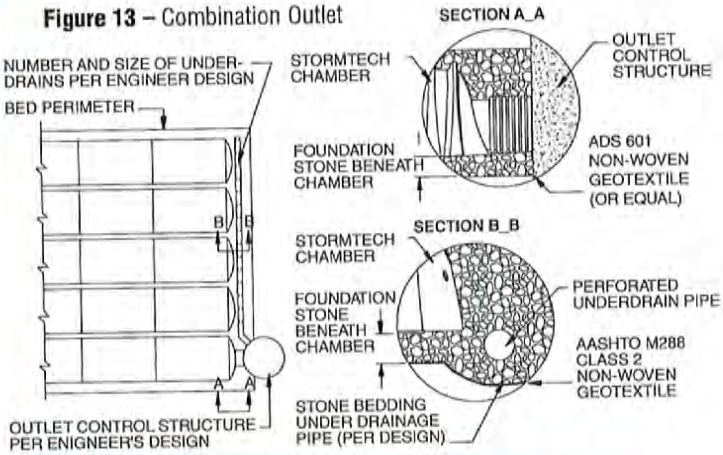

9.0 Other Considerations

StormTech

9.1 EROSION CONTROL

Erosion and sediment control measures must be integrated into the plan to protect the stormwater system both during and after construction. These practices may have a direct impact on the system's infiltration performance and longevity. Vegetation, temporary sediment barriers (silt fences, hay bales, fabric-wrapped catch basin grates), and strategic stormwater runoff management may be used to control erosion and sedimentation. StormTech recommends the use of pipe plugs on the inlet pipe until the system is in service.

9.2 SITE IMPROVEMENT TECHNIQUES

When site conditions are less than optimal, StormTech recognizes many methods for improving a site for construction. Some techniques include the removal and replacement of poor materials, the use of engineered subgrade materials, aggregates, chemical treatment, and mechanical treatments including the use of geosynthetics. StormTech recommends referring to AASHTO M 288 guidelines for the appropriate use of geotextiles.

StormTech also recognizes geogrid as a potential component of an engineered solution to improve site conditions or as a construction tool for the experienced contractor. StormTech chamber systems are compatible with the use of geosynthetics. The use of geosynthetics or any other site improvement method does not eliminate or modify any of StormTech's requirements. **It is the ultimate responsibility of the design engineer to ensure that site conditions are suitable for a StormTech chamber system.**

9.3 CONFORMING TO SITE CONSTRAINTS

StormTech chambers have the unique ability to conform to site constraints such as utility lines, light posts, large trees, etc. Rows of chambers can be ended short or interrupted by placing an end cap at the desired location, leaving the required number of chambers out of the row to get by the obstruction, then starting the row of chambers again with another end cap. See **Figure 14** for an example.

Figure 14 – Ability to Conform to Site Constraints

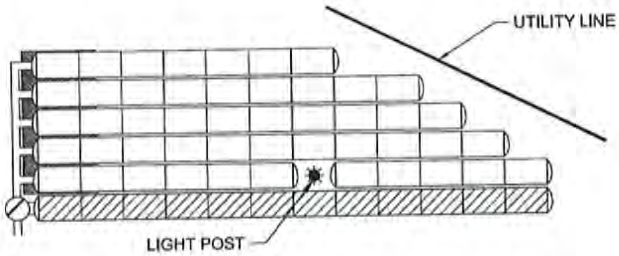

9.4 LINERS

StormTech chambers offer the distinct advantage and versatility that allow them to be designed as an open bottom detention or retention system. In fact, the vast majority of StormTech installations and designs are open bottom detention systems. Using an open bottom system enables treatment of the storm water through the underlying soils and provides a volume safety factor based on the infiltrative capacity of the underlying soils.

In some applications, however, open bottom detention systems may not be allowed. StormTech's Tech Sheet #2 provides guidance for the design and installation of thermoplastic liners for detention systems using StormTech chambers. The major points of the memo are:

- Infiltration of stormwater is generally a desirable stormwater management practice, often required by regulations. Lined systems should only be specified where unique site conditions preclude significant infiltration.
- Thermoplastic liners provide cost effective and viable means to contain stormwater in StormTech subsurface systems where infiltration is undesirable.
- PVC and LLDPE are the most cost effective, installed membrane materials.
- Enhanced puncture resistance from angular aggregate on the water side and from protrusions on the soil side can be achieved by placing a non-woven geotextile reinforcement on each side of the geomembrane. A sand underlayment in lieu of the geotextile reinforcement on the soil side may be considered when cost effective.
- StormTech does not design, fabricate, sell or install thermoplastic liners. StormTech recommends consulting with liner professionals for final design and installation advice.

Figure 15 – Chamber bed placed around light post.

10.0 System Sizing

StormTech

For quick calculations, refer to the Site Calculator on StormTech's website at ***www.stormtech.com***.

10.1 SYSTEM SIZING

The following steps provide the calculations necessary to size a system. If you need assistance determining the number of chambers per row or customizing the bed configuration to fit a specific site, call StormTech's Technical Services Department at **1-888-892-2694.**

1) Determine the amount of storage volume (V_S) required.

It is the design engineer's sole responsibility to determine the storage volume required by local codes.

TABLE 8 – Storage Volume Per Chamber ft³ (m³)

	Bare Chamber Storage	Chamber and Stone Foundation Depth in. (mm)		
	ft³ (m³)	6 (150)	12 (300)	18 (450)
StormTech SC-740	45.9 (1.3)	74.9 (2.1)	81.7 (2.3)	88.4 (2.5)
StormTech SC-310	14.7 (0.4)	31.0 (0.9)	35.7 (1.0)	40.4 (1.1)
	ft³ (m³)	**9 (230)**	**12 (300)**	**18 (450)**
StormTech DC-780	46.2 (1.3)	78.4 (2.2)	81.8 (2.3)	88.6 (2.5)

Note: Assumes 40% porosity for the stone plus the chamber volume.

2) Determine the number of chambers (C) required.

To calculate the number of chambers needed for adequate storage, divide the storage volume (Vs) by the volume of the selected chamber, as follows:
C = Vs / Volume per Chamber

3) Determine the required bed size (S).

To find the size of the bed, multiply the number of chambers needed (C) by either:

StormTech SC-740 / DC-780
bed area per chamber = 33.8 ft² (3.1 m³)

StormTech SC-310
bed area per chamber = 23.7 ft² (2.2 m³)

S = (C x bed area per chamber) +
[1 foot (0.3 m) x bed perimeter in feet (meters)]

NOTE: It is necessary to add one foot (0.3 m) around the perimeter of the bed for end caps and working space.

4) Determine the amount of clean, crushed, angular stone (Vst) required.

TABLE 9 – Amount of Stone Per Chamber

	Stone Foundation Depth		
ENGLISH tons (yd³)	6"	12"	18"
StormTech SC-740	3.8 (2.8)	4.6 (3.3)	5.5 (3.9)
StormTech SC-310	2.1 (1.5)	2.7 (1.9)	3.4 (2.4)
METRIC kg (m³)	**150 mm**	**300 mm**	**450 mm**
StormTech SC-740	3450 (2.1)	4170 (2.5)	4490 (3.0)
StormTech SC-310	1830 (1.1)	2490 (1.5)	2990 (1.8)
ENGLISH tons (yd³)	**9"**	**12"**	**18"**
StormTech DC-780	4.2 (3.0)	4.7 (3.3)	5.6 (3.9)
METRIC kg (m³)	**230 mm**	**300 mm**	**450 mm**
StormTech DC-780	3810 (2.3)	4264 (2.5)	5080 (3.0)

Note: Assumes 6" (150 mm) of stone above, and between chambers.

To calculate the total amount of clean, crushed, angular stone required, multiply the number of chambers (C) by the selected weight of stone from **Table 9.**
NOTE: Clean, crushed, angular stone is also required around the perimeter of the system.

5) Determine the volume of excavation (Ex) required.
6) Determine the area of filter fabric (F) required.

TABLE 10 – Volume of Excavation Per Chamber yd³ (m³)

	Stone Foundation Depth		
	6" (150 mm)	12" (300 mm)	18" (450 mm)
StormTech SC-740	5.5 (4.2)	6.2 (4.7)	6.8 (5.2)
StormTech SC-310	2.9 (2.2)	3.4 (2.6)	3.8 (2.9)
	9" (230 mm)	**12" (300 mm)**	**18" (457 mm)**
StormTech DC-780	5.9 (4.5)	6.3 (4.8)	6.9 (5.3)

Note: Assumes 6" (150 mm) of separation between chamber rows and 18" (450 mm) of cover. The volume of excavation will vary as the depth of the cover increases.

Each additional foot of cover will add a volume of excavation of 1.3 yds³ (1.0 m³) per SC-740 / DC-780 and 0.9 yds³ (0.7 m³) per SC-310 chamber.

The bottom and sides of the bed and the top of the embedment stone must be covered with ADS 601 (or equal) a non-woven geotextile (filter fabric). The area of the sidewalls must be calculated and a 2 foot (0.6 m) overlap must be included where two pieces of filter fabric are placed side-by-side or end-to-end. Geotextiles typically come in 15 foot (4.6 m) wide rolls.

7) Determine the number of end caps (E_C) required.

Each row of chambers requires two end caps.
E_C = number of rows x 2

11.0 Detail Drawings

Figure 16 – Inspection Port Detail

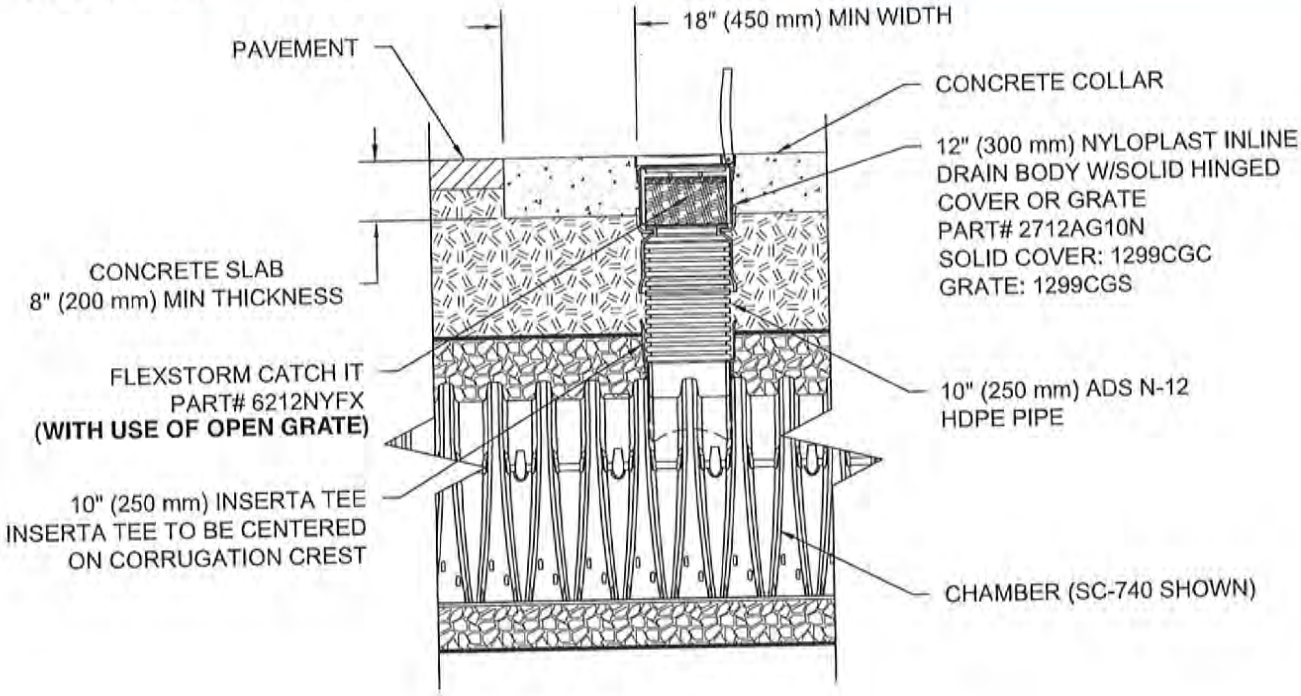

Figure 17 – Under Drain Detail

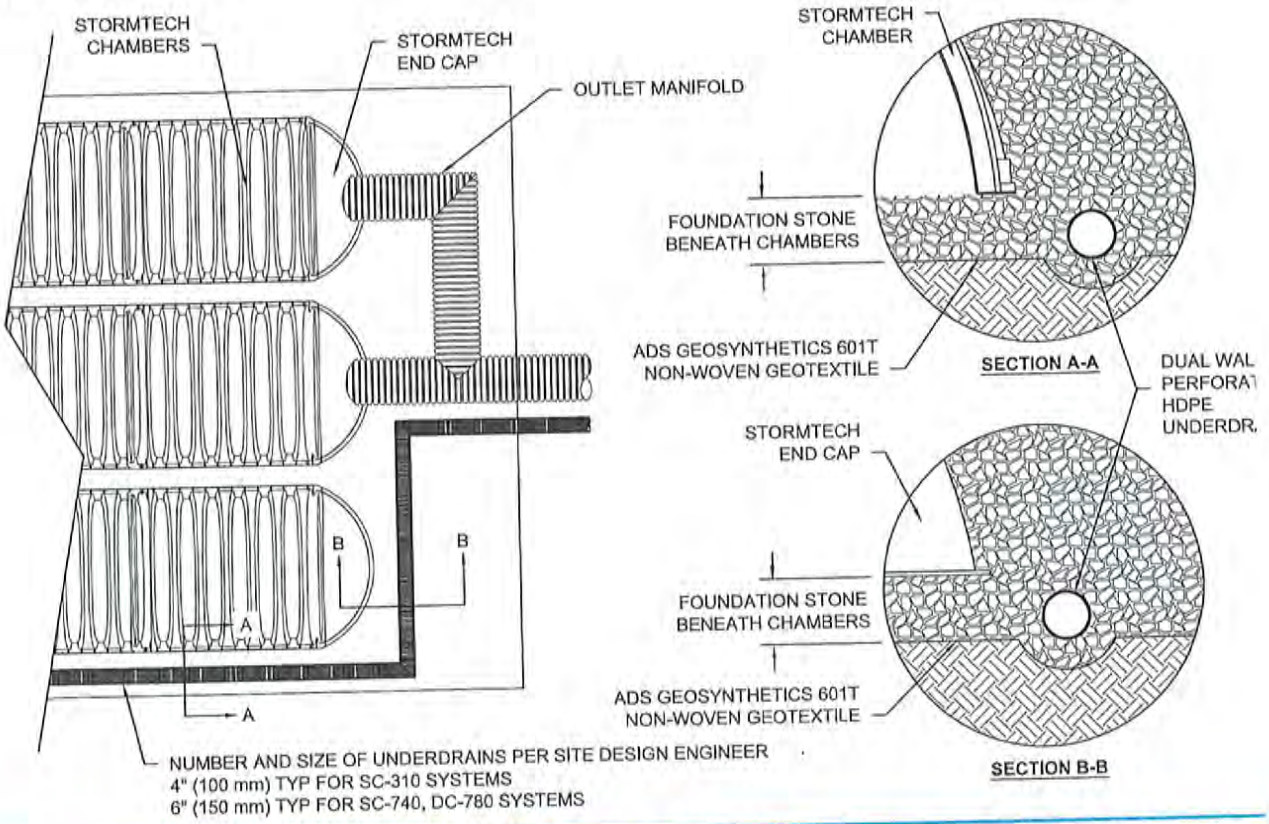

12.0 Inspection and Maintenance

StormTech

12.1 ISOLATOR ROW INSPECTION

Regular inspection and maintenance are essential to assure a properly functioning stormwater system. Inspection is easily accomplished through the manhole or optional inspection ports of an Isolator Row. Please follow local and OSHA rules for a confined space entry.

Inspection ports can allow inspection to be accomplished completely from the surface without the need for a confined space entry. Inspection ports provide visual access to the system with the use of a flashlight. A stadia rod may be inserted to determine the depth of sediment. If upon visual inspection it is found that sediment has accumulated to an average depth exceeding 3" (76 mm), cleanout is required.

A StormTech Isolator Row should initially be inspected immediately after completion of the site's construction. While every effort should be made to prevent sediment from entering the system during construction, it is during this time that excess amounts of sediments are most likely to enter any stormwater system. Inspection and maintenance, if necessary, should be performed prior to passing responsibility over to the site's owner. Once in normal service, a StormTech Isolator Row should be inspected bi-annually until an understanding of the sites characteristics is developed. The site's maintenance manager can then revise the inspection schedule based on experience or local requirements.

12.2 ISOLATOR ROW MAINTENANCE

JetVac maintenance is recommended if sediment has been collected to an average depth of 3" (76 mm) inside the Isolator Row. More frequent maintenance may be required to maintain minimum flow rates through the Isolator Row. The JetVac process utilizes a high pressure water nozzle to propel itself down the Isolator Row while scouring and suspending sediments. As the nozzle is retrieved, a wave of suspended sediments is flushed back into the manhole for vacuuming. Most sewer and pipe maintenance companies have vacuum/ JetVac combination vehicles. Fixed nozzles designed for culverts or large diameter pipe cleaning are preferable. Rear facing jets with an effective spread of at least 45" (1143 mm) are best. The JetVac process shall only be performed on StormTech Rows that have AASHTO class 1 woven geotextile over the foundation stone (ADS 315ST or equal).

Looking down the Isolator Row.

A typical JetVac truck. (This is not a StormTech product.)

Examples of culvert cleaning nozzles appropriate for Isolator Row maintenance. (These are not StormTech products.)

12.0 Inspection & Maintenance

STORMTECH ISOLATOR™ ROW - STEP-BY-STEP MAINTENANCE PROCEDURES

Step 1) Inspect Isolator Row for sediment

A) Inspection ports (if present)

i. Remove lid from floor box frame

ii. Remove cap from inspection riser

iii. Using a flashlight and stadia rod, measure depth of sediment

iv. If sediment is at, or above, 3" (76 mm) depth proceed to Step 2. If not proceed to Step 3.

B) All Isolator Rows

i. Remove cover from manhole at upstream end of Isolator Row

ii. Using a flashlight, inspect down Isolator Row through outlet pipe

1. Follow OSHA regulations for confined space entry if entering manhole

2. Mirrors on poles or cameras may be used to avoid a confined space entry

iii. If sediment is at or above the lower row of sidewall holes [approximately 3" (76 mm)] proceed to Step 2. If not proceed to Step 3.

Step 2) Clean out Isolator Row using the JetVac process

A) A fixed floor cleaning nozzle with rear facing nozzle spread of 45" (1143 mm) or more is preferable

B) Apply multiple passes of JetVac until back-flush water is clean

C) Vacuum manhole sump as required during jetting

Step 3) Replace all caps, lids and covers

Step 4) Inspect and clean catch basins and manholes upstream of the StormTech system following local guidelines.

Figure 20 – StormTech Isolator Row (not to scale)

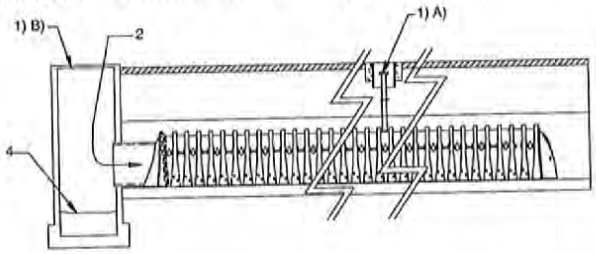

12.3 ECCENTRIC PIPE HEADER INSPECTION

Theses guidelines do not supercede a pipe manufacturer's recommended I&M procedures. Consult with the manufacturer of the pipe header system for specific I&M procedures. Inspection of the header system should be carried out quarterly. On sites which generate higher levels of sediment more frequent inspections may be necessary. Headers may be accessed through risers, access ports or manholes. Measurement of sediment may be taken with a stadia rod or similar device. Clean-out of sediment should occur when the sediment volume has reduced the storage area by 25% or the depth of sediment has reached approximately 25% of the diameter of the structure.

12.4 ECCENTRIC PIPE MANIFOLD MAINTENANCE

Cleanout of accumulated material should be accomplished by vacuum pumping the material from the header. Cleanout should be accomplished during dry weather. Care should be taken to avoid flushing sediments out through the outlet pipes and into the chamber rows.

Eccentric Header Step-by-Step Maintenance Procedures

1. Locate manholes connected to the manifold system
2. Remove grates or covers
3. Using a stadia rod, measure the depth of sediment
4. If sediment is at a depth of about 25% pipe volume or 25% pipe diameter proceed to step 5. If not proceed to step 6.
5. Vacuum pump the sediment. Do not flush sediment out inlet pipes.
6. Replace grates and covers
7. Record depth and date and schedule next inspection

Figure 21 – Eccentric Manifold Maintenance

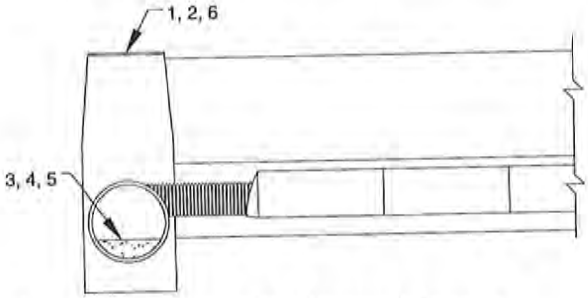

Please contact StormTech's Technical Services Department at 888-892-2894 for a spreadsheet to estimate cleaning intervals.

13.0 General Notes

StormTech

1. StormTech ("StormTech") requires installing contractors to use and understand StormTech's latest Installation Instructions prior to beginning system installation.
2. Our Technical Services Department offers installation consultations to installing contractors. Contact our Technical Service Representatives at least 30 days prior to system installation to arrange a pre-installation consultation. Our representatives can then answer questions or address comments on the StormTech chamber system and inform the Installing contractor of the minimum installation requirements before beginning the system's construction. Call **860-529-8188** to speak to a Technical Service Representative or visit **www.stormtech.com** to receive a copy of our Installation Instructions.
3. StormTech's requirements for systems with pavement design (asphalt, concrete pavers, etc.): Minimum cover for the SC-740, DC-780 and SC-310 chambers is 18" (457 mm) not including pavement; Maximum cover for the SC-740 and SC-310 chambers is 96" (2.4 m) including pavement design; Maximum cover for the DC-780 chamber is 12' (3.6 m) including pavement design. For installations that do not include pavement, where rutting from vehicles may occur, minimum required cover is 24" (610 mm), maximum cover is as stated above.
4. The contractor must report any discrepancies with the bearing capacity of the chamber foundation materials to the design engineer.
5. AASHTO M288 Class 2 non-woven geotextile (filter fabric) must be used as indicated in the project plans.
6. Stone placement between chamber rows and around perimeter must follow instructions as indicated in the most current version of StormTech's Installation Instructions.
7. Backfilling over the chambers must follow requirements as indicated in the most current version of StormTech's Installation Instructions.
8. The contractor must refer to StormTech's Installation Instructions for a Table of Acceptable Vehicle Loads at various depths of cover. This information is also available at StormTech's website: **www.stormtech.com.** The contractor is responsible for preventing vehicles that exceed StormTech's requirements from traveling across or parking over the stormwater system. Temporary fencing, warning tape and appropriately located signs are commonly used to prevent unauthorized vehicles from entering sensitive construction areas.
9. The contractor must apply erosion and sediment control measures to protect the stormwater system during all phases of site construction per local codes and design engineer's specifications.
10. STORMTECH PRODUCT WARRANTY IS LIMITED. Contact StormTech for warranty information.

14.0 StormTech Product Specifications

1.0 GENERAL

1.1 StormTech chambers are designed to control stormwater runoff. As a subsurface retention system, StormTech chambers retain and allow effective infiltration of water into the soil. As a subsurface detention system, StormTech chambers detain and allow for the metered flow of water to an outfall.

2.0 CHAMBER PARAMETERS

2.1 The Chamber shall be injection molded of an impact modified polypropylene or polyethylene copolymer to maintain adequate stiffness through higher temperatures experienced during installation and service.

2.2 The nominal chamber dimensions of the StormTech SC-740 and DC-780 shall be 30.0" (762 mm) tall, 51.0" (1295 mm) wide and 90.7" (2304 mm) long. The nominal chamber dimensions of the StormTech SC-310 shall be 16.0" (406 mm) tall, 34.0" (864 mm) wide and 90.7" (2304 mm) long. The installed length of a joined chamber shall be 85.4" (2169 mm).

2.3 The chamber shall have a continuously curved section profile.

2.4 The chamber shall be open-bottomed.

2.5 The chamber shall incorporate an overlapping corrugation joint system to allow chamber rows of almost any length to be created. The overlapping corrugation joint system shall be effective while allowing a chamber to be trimmed to shorten its overall length.

2.6 The nominal storage volume of all StormTech chambers includes the volume of the clean, crushed, angular stone with an assumed 40% porosity. The nominal storage volume of a joined StormTech SC-740 chamber shall be 74.9 ft^3 (2.1 m^3) per chamber when installed per StormTech's typical details. This equates to a storage volume per unit area of bed of 2.2 ft^3/ft^2 (0.67 m^3/m^2). The nominal storage volume of a joined StormTech DC-780 chamber shall be 78.4 ft^3 (2.2 m^3) per chamber when installed per StormTech's typical details. This equates to a storage volume per unit area of bed of 2.3 ft^3/ft^2 (0.70 m^3/m^2). The nominal storage volume of a joined StormTech SC-310 chamber shall be 31.0 ft^3 (0.88 m^3) per chamber when installed per StormTech's typical details. This equates to a storage volume per unit area of bed of 1.3 ft^3/ft^2 (0.40 m^3/m^2).

2.7 The SC-740 and SC-310 chambers shall have forty-eight orifices penetrating the sidewalls to allow for lateral conveyance of water.

2.8 The chamber shall have two orifices near its top to allow for equalization of air pressure between its interior and exterior.

2.9 The chamber shall have both of its ends open to allow for unimpeded hydraulic flows and visual inspections down a row's entire length.

2.10 The chamber shall have 14 corrugations.

2.11 The chamber shall have a circular, indented, flat surface on the top of the chamber for an optional 4" (100 mm) diameter (maximum) inspection port.

2.12 The chamber shall be analyzed and designed using AASHTO methods for thermoplastic culverts contained in the LRFD Bridge Design Specifications, 2nd Edition, including Interim Specifications through 2001. Design live load shall be the AASHTO design truck. Design shall consider earth and live loads as appropriate for the minimum to maximum specified depth of fill.

2.13 The chamber shall be manufactured in an ISO 9001:2000 certified facility.

3.0 END CAP PARAMETERS

3.1 The end cap shall be designed to fit into any corrugation of a chamber, which allows: capping a chamber that has its length trimmed; segmenting rows into storage basins of various lengths.

3.2 The end cap shall have saw guides to allow easy cutting for various diameters of pipe that may be used to inlet the system.

3.3 The end cap shall have excess structural adequacies to allow cutting an orifice of any size at any invert elevation.

3.4 The primary face of an end cap shall be curved outward to resist horizontal loads generated near the edges of beds.

3.5 The end cap shall be manufactured in an ISO 9001:2000 certified facility.

15.0 Chamber Specifications for Contract Documents

STORMWATER CHAMBER SPECIFICATIONS:

1. Chambers shall be StormTech SC-740, SC-310 or approved equal.
2. Chambers shall conform to the requirements of ASTM F 2922, "Standard Specification for Polyethylene (PE) Corrugated Wall Stormwater Collection Chambers."
3. Chamber rows shall provide continuous, unobstructed internal space with no internal support panels.
4. The structural design of the chambers, the structural backfill and the installation requirements shall ensure that the load factors specified in the AASHTO LRFD Bridge Design Specifications, Section 12.12 are met for: 1) long-duration dead loads and 2) short-duration live loads, based on the AASHTO Design Truck with consideration for impact and multiple vehicle presences.
5. Chambers shall conform to the requirements of ASTM F2787, "Standard Practice for Structural Design of Thermoplastic Corrugated Wall Stormwater Collection Chambers."
6. Only chambers that are approved by the engineer will be allowed. The contractor shall submit (3 sets) of the following to the engineer for approval before delivering chambers to the project site:
   - A structural evaluation by a registered structural engineer that demonstrates that the load factors specified in the AASHTO LRFD Bridge Design Specifications, Section 12.12 are met. The 50-year creep modulus data specified in ASTM F2922 must be used as part of the AASHTO structural evaluation to verify long-term performance.
7. Chambers shall be produced at an ISO 9001 certified manufacturing facility.
8. All design specifications for chambers shall be in accordance with the manufacturer's latest design manual.
9. The installation of chambers shall be in accordance with the manufacturer's latest installation instructions.

STORMWATER CHAMBER SPECIFICATIONS:

1. Chambers shall be StormTech DC-780 or approved equal.
2. Chambers shall conform to the requirements of ASTM F 2418, "Standard Specification for Polypropylene (PP) Corrugated Wall Stormwater Collection Chambers."
3. Chamber rows shall provide continuous, unobstructed internal space with no internal support panels.
4. The structural design of the chambers, the structural backfill and the installation requirements shall ensure that the load factors specified in the AASHTO LRFD Bridge Design Specifications, Section 12.12 are met for: 1) long-duration dead loads and 2) short-duration live loads, based on the AASHTO Design Truck with consideration for impact and multiple vehicle presences.
5. Chambers shall conform to the requirements of ASTM F2787, "Standard Practice for Structural Design of Thermoplastic Corrugated Wall Stormwater Collection Chambers."
6. Only chambers that are approved by the engineer will be allowed. The contractor shall submit (3 sets) of the following to the engineer for approval before delivering chambers to the project site:
   - A structural evaluation by a registered structural engineer that demonstrates that the load factors specified in the AASHTO LRFD Bridge Design Specifications, Section 12.12 are met. The 50-year creep modulus data specified in ASTM F2418 must be used as part of the AASHTO structural evaluation to verify long-term performance.
7. Chambers shall be produced at an ISO 9001 certified manufacturing facility.
8. All design specifications for chambers shall be in accordance with the manufacturer's latest design manual.
9. The installation of chambers shall be in accordance with the manufacturer's latest installation instructions.

A Family of Products and Services for the Stormwater Industry:

- MC-3500 and MC-4500 Chambers and End Caps
- SC-310 and SC-740 Chambers and End Caps
- DC-780 Chambers and End Caps
- Fabricated End Caps
- Fabricated Manifold Fittings
- Patented Isolator Row for Maintenance and Water Quality
- Chamber Separation Spacers
- In-House System Layout Assistance
- On-Site Educational Seminars
- Worldwide Technical Sales Group
- Centralized Product Applications Department
- Research and Development Team
- Technical Literature, O&M Manuals and Detailed CAD drawings all downloadable via our Web Site

StormTech provides state of the art products and services that meet or exceed industry performance standards and expectations. We offer designers, regulators, owners and contractors the highest quality products and services for stormwater management that "Saves Valuable Land and Protects Water Resources."

Please contact one of our inside project application professionals or Engineered Product Managers (EPMs) to discuss your particular application. A wide variety of technical support material is available in print, electronic media or from our website at www.stormtech.com. For any questions, please call StormTech at 888-892-2694.

MC-4500 MC-3500 DC-780 SC-740 SC-310

StormTech®

Detention • Retention • Water Quality

A division of ADS

70 Inwood Road, Suite 3 | Rocky Hill | Connecticut | 06067

860.529.8188 | 888.892.2694 | fax 866.328.8401 | fax 860.529.8040 | www.stormtech.com

www.stormtech.com

ADS "Terms and Conditions of Sale" are available on the ADS website, www.ads-pipe.com.
Advanced Drainage Systems, the ADS logo, and the green stripe are registered trademarks of Advanced Drainage Systems.
StormTech® and the Isolator® Row are registered trademarks of StormTech, Inc.
Green Building Council Member logo is a registered trademark of the U.S. Green Building Council.

© 2014 Advanced Drainage Systems, Inc. S250211 12/14

M100

Technical Data Sheet

M100

Woven Monofilament Polypropylene Geotextile

M100 is manufactured using high tenacity monofilament polypropylene yarns woven to form a dimensionally stable network. It has been stabilized to resist degradation due to ultraviolet exposure and is resistant to commonly encountered mildew, insects and soil chemicals, and is non-biodegradable

The high strength and flow rate of M100 makes it ideal for filtration beneath hard armor systems.

Property	Test Method	Min Avg. Roll Values
Grab Tensile Strength	ASTM D4632	370 x 250 Lbs
Elongation	ASTM D4632	15%
Puncture Strength	ASTM D4833	120 Lbs
Mullen Burst Strength	ASTM D3786	450 Psi
Trapezoid Tear Strength	ASTM D4533	100 x 60 Lbs
UV Resistance (at 500 hrs)	ASTM D4355	90%
Apparent Opening Size (AOS)	ASTM D4751	70 US Sieve
Percent Open Area	COE-02215	4%
Permittivity (sec^{-1})	ASTM D4491	0.28 sec^{-1}
Water Flow Rate	ASTM D4491	18 gpm/ft^2

Values quoted above are the result of multiple tests conducted at an independent testing facility. M100 meets or exceeds values listed.

Packaging		
Roll Width	6.0 ft	12 ft
Roll Length	300 ft	300 ft
Roll Area	200 yd^2	400 yd^2

Disclaimer: ACF Environmental assumes no liability for the completeness or accuracy of this information or the ultimate use of this information. This document should not be construed as engineering advice. Always consult the project engineer for project specific requirements. The end user assumes sole responsibility for the use of this information and product. The property values listed above are subject to change without notice.

ACF ENVIRONMENTAL
2831 Cardwell Road • Richmond, VA 23234
800-448-3636 • www.acfenvironmental.com
11/3/2011

StormTech®
Detention • Retention • Water Quality
A division of ADS

SC-310/SC-740/DC-780

StormTech Construction Guide

REQUIRED MATERIALS AND EQUIPMENT LIST

- Acceptable fill materials per **Table 1**
- Woven and non-woven geotextiles
- StormTech solid end caps and pre-cored end caps
- StormTech chambers
- StormTech manifolds and fittings

IMPORTANT NOTES:

A. This installation guide provides the minimum requirements for proper installation of chambers. Non-adherence to this guide may result in damage to chambers during installation. Replacement of damaged chambers during or after backfilling is costly and very time consuming. It is recommended that all installers are familiar with this guide, and that the contractor inspects the chambers for distortion, damage and joint integrity as work progresses.

B. Use of a dozer to push embedment stone between the rows of chambers may cause damage to chambers and is not an acceptable backfill method. Any chambers damaged by using the "dump and push" method are not covered under the StormTech standard warranty.

C. Care should be taken in the handling of chambers and end caps. Avoid dropping, prying or excessive force on chambers during removal from pallet and initial placement.

Requirements for System Installation

Excavate bed and prepare subgrade per engineer's plans.

Place non-woven geotextile over prepared soils and up excavation walls.

Place clean, crushed, angular stone foundation 6" (150 mm) min. Install underdrains if required. Compact to achieve a flat surface.

Manifold, Scour Fabric and Chamber Assembly

Install manifolds and lay out woven scour geotextile at inlet rows [min. 12.5 ft (3.8 m)] at each inlet end cap. Place a continuous piece (no seams, double layer) along entire length of Isolator® Row(s).

Align the first chamber and end cap of each row with inlet pipes. Contractor may choose to postpone stone placement around end chambers and leave ends of rows open for easy inspection of chambers during the backfill process.

Construct the chamber bed by overlapping the chambers lengthwise in rows. Attach chambers by overlapping the end corrugation of one chamber on to the end corrugation of the last chamber in the row. Be sure that the chamber placement does not exceed the reach of the construction equipment used to place the stone.

Attaching the End Caps

Lift the end of the chamber a few inches off the ground. With the curved face of the end cap facing outward, place the end cap into the chamber's end corrugation.

Prefabricated End Caps

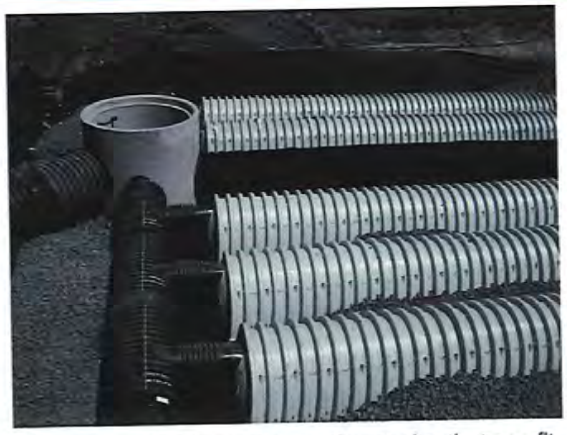

24" (600 mm) inlets are the maximum size that can fit into a SC-740/DC-780 end cap and must be prefabricated with a 24" (600 mm) pipe stub. SC-310 chambers with a 12" (300 mm) inlet pipe must use a prefabricated end cap with a 12" (300 mm) pipe stub.

Isolator Row

Drape a strip of ADS non-woven geotextile over the row of chambers (not required over DC-780). This is the same type of non-woven geotextile used as a separation layer around the angular stone of the StormTech system.

Initial Anchoring of Chambers – Embedment Stone

Initial embedment shall be spotted along the centerline of the chamber evenly anchoring the lower portion of the chamber. This is best accomplished with a stone conveyor or excavator reaching along the row.

No equipment shall be operated on the bed at this stage of the installation. Excavators must be located off the bed. Dump trucks shall not dump stone directly on to the bed. Dozers or loaders are not allowed on the bed at this time.

Backfill of Chambers – Embedment Stone

UNEVEN BACKFILL

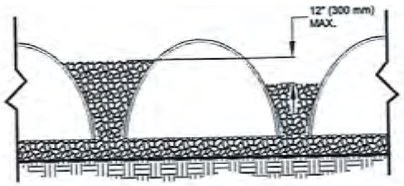

EVEN BACKFILL

PERIMETER NOT BACKFILLED

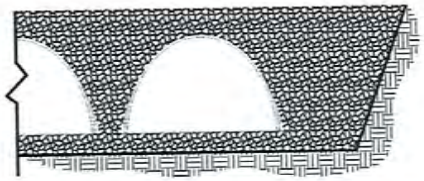

PERIMETER FULLY BACKFILLED

Backfill chambers evenly. Stone column height should never differ by more than 12" (300 mm) between adjacent chamber rows or between chamber rows and perimeter.

Perimeter stone must be brought up evenly with chamber rows. Perimeter must be fully backfilled, with stone extended horizontally to the excavation wall.

Backfill of Chambers – Embedment Stone and Cover Stone

Continue evenly backfilling between rows and around perimeter until embedment stone reaches tops of chambers. Perimeter stone must extend horizontally to the excavation wall for both straight or sloped sidewalls. **Only after chambers have been backfilled to top of chamber and with a minimum 6" (150 mm) of cover stone on top of chambers can small dozers be used over the chambers for backfilling remaining cover stone.**

Small dozers and skid loaders may be used to finish grading stone backfill in accordance with ground pressure limits in Table 2. They must push material parallel to rows only. Never push perpendicular to rows. StormTech recommends that the contractor inspect chambers before placing final backfill. Any chambers damaged by construction shall be removed & replaced.

Final Backfill of Chambers – Fill Material

Install non-woven geotextile over stone. Geotextile must overlap 24" (600 mm) min. where edges meet. Compact each lift of backfill as specified in the site design engineer's drawings. Roller travel parallel with rows.

StormTech Isolator Row Detail

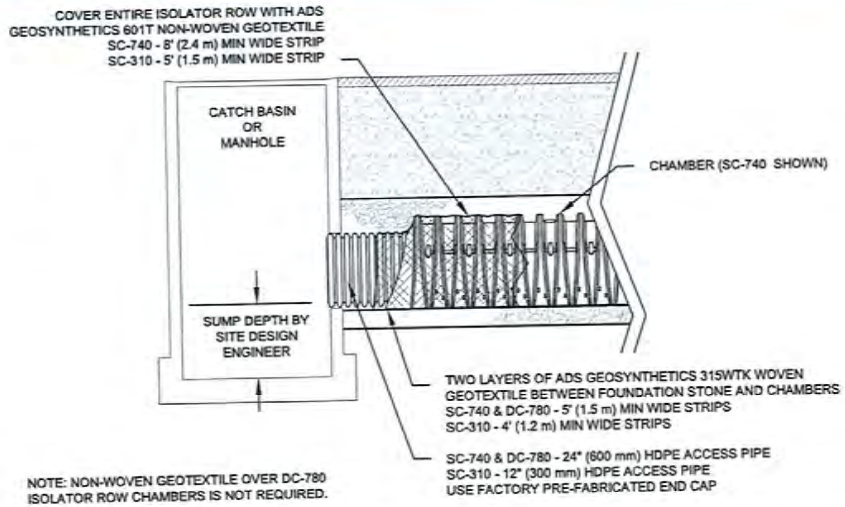

Table 1 – Acceptable Fill Materials

Material Location	Description	AASHTO M43 Designation[1]	Compaction/Density Requirement
Ⓓ **Final Fill:** Fill Material for layer 'D' starts from the top of the 'C' layer to the bottom of flexible pavement or unpaved finished grade above. Note that the pavement subbase may be part of the 'D' layer.	Any soil/rock materials, native soils or per engineer's plans. Check plans for pavement subgrade requirements.	N/A	Prepare per site design engineer's plans. Paved installations may have stringent material and preparation requirements.
Ⓒ **Initial Fill:** Fill Material for layer 'C' starts from the top of the embedment stone ('B' layer) to 18" (450 mm) above the top of the chamber. Note that pavement subbase may be part of the 'C' layer.	Granular well-graded soil/aggregate mixtures, <35% fines or processed aggregate. Most pavement subbase materials can be used in lieu of this layer.	AASHTO M45 A-1, A-2-4, A-3 or AASHTO M43[1] 3, 357, 4, 467, 5, 56, 57, 6, 67, 68, 7, 78, 8, 89, 9, 10	Begin compaction after min. 12" (300 mm) of material over the chambers is reached. Compact additional layers in 6" (150 mm) max. lifts to a min. 95% Proctor density for well-graded material and 95% relative density for processed aggregate materials. Roller gross vehicle weight not to exceed 12,000 lbs (53 kN). Dynamic force not to exceed 20,000 lbs (89 kN)
Ⓑ **Embedment Stone:** Embedment Stone surrounding chambers from the foundation stone to the 'C' layer above.	Clean, crushed, angular stone nominal size distribution 3/4 - 2" (20 mm - 50 mm)	AASHTO M43[1] 3, 357, 4, 467, 5, 56, 57	No compaction required.
Ⓐ **Foundation Stone:** Foundation Stone below the chambers from the subgrade up to the foot (bottom) of the chamber.	Clean, crushed, angular stone, nominal size distribution 3/4 - 2" (20 mm - 50 mm)	AASHTO M43[1] 3, 357, 4, 467, 5, 56, 57	Place and compact in 6" (150 mm) lifts using two full coverages with a vibratory compactor.[2, 3]

PLEASE NOTE:

1. *The listed AASHTO designations are for gradations only. The stone must also be clean, crushed, angular. For example, a specification for #4 stone would state: "clean, crushed, angular no. 4 (AASHTO M43) stone".*
2. *StormTech compaction requirements are met for 'A' location materials when placed and compacted in 6" (150 mm) (max) lifts using two full coverages with a vibratory compactor.*
3. *Where infiltration surfaces may be comprised by compaction, for standard installations and standard design load conditions, a flat surface may be achieved by raking or dragging without compaction equipment. For special load designs, contact StormTech for compaction requirements.*

Figure 1 – Inspection Port Detail

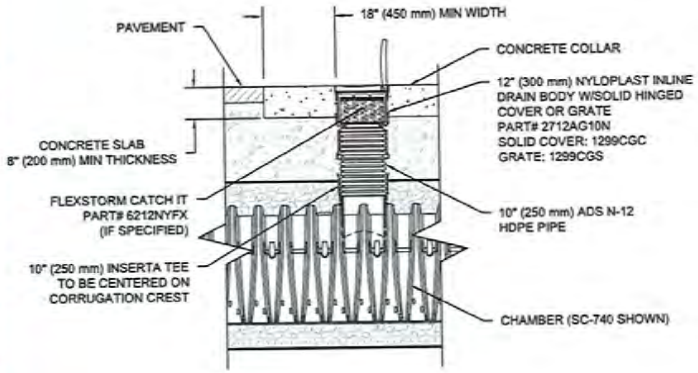

Figure 2 – Fill Material Locations

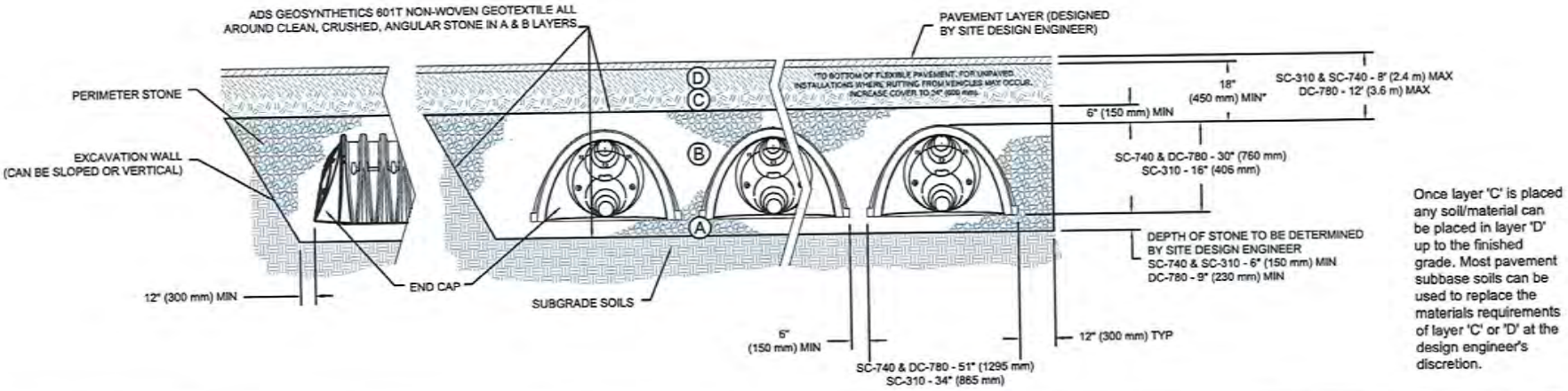

Once layer 'C' is placed any soil/material can be placed in layer 'D' up to the finished grade. Most pavement subbase soils can be used to replace the materials requirements of layer 'C' or 'D' at the design engineer's discretion.

NOTES:

1. *36" (900 mm) of stabilized cover materials over the chambers is required for full dump truck travel and dumping.*
2. *During paving operations, dump truck axle loads on 18" (450 mm) of cover may be necessary. Precautions should be taken to avoid rutting of the road base layer, to ensure that compaction requirements have been met, and that a minimum of 18" (450 mm) of cover exists over the chambers. Contact StormTech for additional guidance on allowable axle loads during paving.*
3. *Ground pressure for track dozers is the vehicle operating weight divided by total ground contact area for both tracks. Excavators will exert higher ground pressures based on loaded bucket weight and boom extension.*
4. *Mini-excavators (< 8,000lbs/3,628 kg) can be used with at least 12" (300 mm) of stone over the chambers and are limited by the maximum ground pressures in Table 2 based on a full bucket at maximum boom extension.*
5. *Storage of materials such as construction materials, equipment, spoils, etc. should not be located over the StormTech system. The use of equipment over the StormTech system not covered in Table 2 (ex. soil mixing equipment, cranes, etc) is limited. Please contact StormTech for more information.*
6. *Allowable track loads based on vehicle travel only. Excavators shall not operate on chamber beds until the total backfill reaches 3 feet (900 mm) over the entire bed.*

Table 2 – Maximum Allowable Construction Vehicle Loads[5]

Material Location	Fill Depth over Chambers in. [mm]	Maximum Allowable Wheel Loads		Maximum Allowable Track Loads[6]		Maximum Allowable Roller Loads
		Max Axle Load for Trucks lbs [kN]	Max Wheel Load for Loaders lbs [kN]	Track Width in. [mm]	Max Ground Pressure psf [kPa]	Max Drum Weight or Dynamic Force lbs [kN]
Ⓓ Final Fill Material	36" [900] Compacted	32,000 [142]	16,000 [71]	12" [305] 18" [457] 24" [610] 30" [762] 36" [914]	3420 [164] 2350 [113] 1850 [89] 1510 [72] 1310 [63]	38,000 [169]
Ⓒ Initial Fill Material	24" [600] Compacted	32,000 [142]	16,000 [71]	12" [305] 18" [457] 24" [610] 30" [762] 36" [914]	2480 [119] 1770 [85] 1430 [68] 1210 [58] 1070 [51]	20,000 [89]
	24" [600] Loose/Dumped	32,000 [142]	16,000 [71]	12" [305] 18" [457] 24" [610] 30" [762] 36" [914]	2245 [107] 1625 [78] 1325 [63] 1135 [54] 1010 [48]	20,000 [89] Roller gross vehicle weight not to exceed 12,000 lbs. [53 kN]
	18" [450]	32,000 [142]	16,000 [71]	12" [305] 18" [457] 24" [610] 30" [762] 36" [914]	2010 [96] 1480 [71] 1220 [58] 1060 [51] 950 [45]	20,000 [89] Roller gross vehicle weight not to exceed 12,000 lbs. [53 kN]
Ⓑ Embedment Stone	12" [300]	16,000 [71]	NOT ALLOWED	12" [305] 18" [457] 24" [610] 30" [762] 36" [914]	1540 [74] 1190 [57] 1010 [48] 910 [43] 840 [40]	20,000 [89] Roller gross vehicle weight not to exceed 12,000 lbs. [53 kN]
	6" [150]	8,000 [35]	NOT ALLOWED	12" [305] 18" [457] 24" [610] 30" [762] 36" [914]	1070 [51] 900 [43] 800 [38] 760 [36] 720 [34]	NOT ALLOWED

Table 3 – Placement Methods and Descriptions

Material Location	Placement Methods/ Restrictions	Wheel Load Restrictions	Track Load Restrictions	Roller Load Restrictions
		See Table 2 for Maximum Construction Loads		
Ⓓ Final Fill Material	A variety of placement methods may be used. All construction loads must not exceed the maximum limits in Table 2.	36" (900 mm) minimum cover required for dump trucks to dump over chambers.	Dozers to push parallel to rows until 36" (900mm) compaced cover is reached.[4]	Roller travel parallel to rows only until 36" (900 mm) compacted cover is reached.
Ⓒ Initial Fill Material	Excavator positioned off bed recommended. Small excavator allowed over chambers. Small dozer allowed.	Asphalt can be dumped into paver when compacted pavement subbase reaches 18" (450 mm) above top of chambers.	Small LGP track dozers & skid loaders allowed to grade cover stone with at least 6" (150 mm) stone under tracks at all times. Equipment must push parallel to rows at all times.	Use dynamic force of roller only after compacted fill depth reaches 12" (300 mm) over chambers. Roller travel parallel to chamber rows only.
Ⓑ Embedment Stone	No equipment allowed on bare chambers. Use excavator or stone conveyor positioned off bed or on foundation stone to evenly fill around all chambers to at least the top of chambers.	No wheel loads allowed. Material must be placed outside the limits of the chamber bed.	No tracked equipment is allowed on chambers until a min. 6" (150 mm) cover stone is in place.	No rollers allowed.
Ⓐ Foundation Stone	No StormTech restrictions. Contractor responsible for any conditions or requirements by others relative to subgrade bearing capacity, dewatering or protection of subgrade.			

ADS "Terms and Conditions of Sale" are available on the ADS website, www.ads-pipe.com.
Advanced Drainage Systems, the ADS logo, and the green stripe are registered trademarks of Advanced Drainage Systems.
StormTech® and the Isolator® Row are registered trademarks of StormTech, Inc
#090113 09/13

©2013 Advanced Drainage Systems, Inc.