LAKE COUNTY
FLORIDA

INVITATION TO BID (ITB)

Fencing at South Lake Regional Park

ITB Number:	**15-0442**	**Contracting Officer:**	Sandra Rogers, CPPB
Bid Due Date:	July 8, 2015	**Pre-Bid Conf. Date:**	See Section 1.4
Bid Due Time:	3:00 PM	**ITB Issue Date:**	June 9, 2015

TABLE OF CONTENTS

SECTION 1: Special Terms and Conditions	Page 2
SECTION 2: Statement of Work	Page 13
SECTION 3: General Terms and Conditions	Page 15
SECTION 4: Pricing/Certifications/Signatures	Page 19
SECTION 5: Attachments	Page 22

SPECIFIC SOLICITATION REQUIREMENTS ARE AS NOTED BELOW:	
Proposal and/or Performance Bond:	Not applicable to this solicitation
Certificate of Competency/License:	Section 1.15
Indemnification/Insurance:	Section 1.8
Mandatory Examination of Site:	Section 1.4

At the date and time specified above, all bids that have been received in a timely manner will be opened, recorded, and accepted for consideration. The names of the bidders submitting bids will be read aloud and recorded. The bids will be available for inspection during normal business hours in the Office of Procurement Services thirty (30) calendar days after the official bid due date. When counter-signed by an authorized County representative, this document and any specifically identified attachments may form the contract document binding the parties to all performance specified herein.

Vendors shall complete and return the entirety of this ITB Document, and attach all other information requested in this ITB document (See Provision 1.13). Failure to sign the bid response, or to submit the bid response by the specified time and date, may be cause for rejection of the bid.

NO-RESPONSE REPLY

If any vendor does not want to respond to this solicitation at this time, or, would like to be removed from Lake County's Vendor List, please mark the appropriate space, complete name below and return this page only.

☐ Not interested at this time; keep our firm on Lake County's Vendors List for future solicitations for this product / service

☐ Please remove our firm from Lake County's Vendor's List for this product / service.

VENDOR IDENTIFICATION

Company Name: _____ **Phone Number:** _____

E-mail Address: _____ **Contact Person:** _____

Section 1.1: Purpose

The purpose of this solicitation is to select a qualified contractor to install 5000 linear feet of 8 Foot high 6 gauge black vinyl coated chain link fence with schedule 40 posts and one (1) thirty-six foot wide maintenance entry gate (see attached photo) at South Lake Regional Park located at the Max Hooks Road and Cathedral Lane in Groveland, Florida. The project shall include all necessary work to provide a 100% completed project as described in the Statement of Work found in Section 2 of this Invitation to Bid, the attached map, fence detail and sample and includes any required mowing, clearing, pruning, trimming, surveying, permit and zoning clearance.

Section 1.2: Designated Procurement Representative

Questions concerning any portion of this solicitation shall be directed in writing [fax and e-mail accepted] to the below named individual who shall be the official point of contact for this solicitation. To ensure reply, questions should be submitted no later than five (5) working days before the bid due date.

Sandra Rogers, CPPB, Contracting Officer
Lake County BCC
Office of Procurement Services
315 W. Main Street, Room 441
PO BOX 7800
Tavares, FL 32778-7800

Phone : 352.343.9832
Fax : 352.343.9473
E-mail: srogers@lakecountyfl.gov

No answers given in response to questions submitted shall be binding upon this solicitation unless released in writing as an addendum to the solicitation by the Lake County Office of Procurement Services.

Section 1.3: Method of Award - To a Single Vendor

Award of this contract will be made to the lowest priced, responsive, responsible vendor who submits an offer in response to this solicitation. To be considered responsible, a vendor must have successfully completed work similar to that required under this solicitation for a public sector entity within the past three (3) years.

Section 1.4: Examination of Site (Mandatory)

Prior to submitting its offer, the vendor is required to visit the site of the proposed work and to become familiar with any conditions which may in any manner affect the work to be done or affect the equipment, materials and labor required. The vendor is also required to examine carefully the drawings and specifications and be thoroughly aware regarding any and all conditions and requirements that may in any manner affect the work to be performed under the

contract. **No additional allowances will be made because of lack of knowledge of these conditions. It is the vendor's responsibility to initial that they have performed the mandatory site visit on Section 4, Certification of Mandatory Site Exam.**

Section 1.5: Term of Contract - Upon Acceptance of Goods or Services

The performance period under this contract shall commence upon the date of the purchase order or related Notice To Proceed and shall remain in effect until such time as the commodities, equipment and/or services acquired in conjunction with this solicitation and resulting contract have been delivered and/or completed, and accepted by the County's authorized representative, and will then remain in effect until completion of the expressed and/or implied warranty periods.

Section 1.6: Option to Renew

Not applicable to this solicitation.

Section 1.7: Method of Payment - Lump Sum Payment After Work is Completed

Upon completion and acceptance of the work required in conjunction with this contract, the vendor(s) shall submit one lump sum invoice that reflects the total value of the contract. This invoice shall be submitted to the County user department(s) to which the required goods or services were delivered.

All invoices shall contain the contract and/or purchase order number, date and location of delivery or service, and confirmation of acceptance of the goods or services by the appropriate County representative. Failure to submit invoices in the prescribed manner will delay payment, and the vendor may be considered in default of contract and its contract may be terminated. Payments shall be tendered in accordance with the Florida Prompt Payment Act, Part VII, Chapter 218, Florida Statutes.

Section 1.8: Insurance

Each vendor shall include in its solicitation response package proof of insurance capabilities, including but not limited to, the following requirements: [This does not mean that the vendor must have the coverage prior to submittal, but, that the coverage must be in effect prior to a purchase order or contract being executed by the County.]

An original certificate of insurance, indicating that the awarded vendor has coverage in accordance with the requirements of this section, shall be furnished by the vendor to the Contracting Officer within five (5) working days of such request and must be received and accepted by the County prior to contract execution and/or before any work begins.

The vendor shall provide and maintain at all times during the term of any contract, without cost or expense to the County, policies of insurance, with a company or companies authorized to do business in the State of Florida, and which are acceptable to the County, insuring the vendor against any and all claims, demands or causes of action whatsoever, for injuries received or damage to property relating to the performance of duties, services and/or obligations of the

vendor under the terms and provisions of the contract. The vendor is responsible for timely provision of certificate(s) of insurance to the County at the certificate holder address evidencing conformance with the contract requirements at all times throughout the term of the contract.

Such policies of insurance, and confirming certificates of insurance, shall insure the vendor is in accordance with the following minimum limits:

General Liability insurance on forms no more restrictive than the latest edition of the Occurrence Form Commercial General Liability policy (CG 00 01) of the Insurance Services Office or equivalent without restrictive endorsements, with the following minimum limits and coverage:

Each Occurrence/General Aggregate	$1,000,000/2,000,000
Products-Completed Operations	$2,000,000
Personal & Adv. Injury	$1,000,000
Fire Damage	$50,000
Medical Expense	$5,000
Contractual Liability	Included

Automobile liability insurance, including owned, non-owned, and hired autos with the following minimum limits and coverage:

Combined Single Limit	$1,000,000

Workers' compensation insurance based on proper reporting of classification codes and payroll amounts in accordance with Chapter 440, Florida Statutes, and/or any other applicable law requiring workers' compensation (Federal, maritime, etc). If not required by law to maintain workers compensation insurance, the vendor must provide a notarized statement that if he or she is injured; he or she will not hold the County responsible for any payment or compensation.

Employers Liability insurance with the following minimum limits and coverage:

Each Accident	$1,000,000
Disease-Each Employee	$1,000,000
Disease-Policy Limit	$1,000,000

Professional liability and/or specialty insurance (medical malpractice, engineers, architect, consultant, environmental, pollution, errors and omissions, etc.) insurance as applicable, with minimum limits of $1,000,000 and annual aggregate of $2,000,000.

The following additional coverage must be provided if a dollar value is inserted below:

Loss of Use at coverage value: $ _____
Garage Keepers Liability at coverage value: $ _____

Lake County, a Political Subdivision of the State of Florida, and the Board of County Commissioners, shall be named as additional insured as their interest may appear on all applicable liability insurance policies.

The certificate(s) of insurance, shall provide for a minimum of thirty (30) days prior written notice to the County of any change, cancellation, or nonrenewal of the provided insurance. It is the vendor's specific responsibility to ensure that any such notice is provided within the stated timeframe to the certificate holder.

If it is not possible for the Vendor to certify compliance, on the certificate of insurance, with all of the above requirements, then the Vendor is required to provide a copy of the actual policy endorsement(s) providing the required coverage and notification provisions.

Certificate(s) of insurance shall identify the applicable solicitation (ITB/RFP/RFQ) number in the Description of Operations section of the Certificate.

Certificate holder shall be:

LAKE COUNTY, A POLITICAL SUBDIVISION OF THE STATE OF FLORIDA, AND THE BOARD OF COUNTY COMMISSIONERS.
P.O. BOX 7800
TAVARES, FL 32778-7800

Certificates of insurance shall evidence a waiver of subrogation in favor of the County, that coverage shall be primary and noncontributory, and that each evidenced policy includes a Cross Liability or Severability of Interests provision, with no requirement of premium payment by the County.

The Vendor shall be responsible for subcontractors and their insurance. Subcontractors are to provide certificates of insurance to the prime vendor evidencing coverage and terms in accordance with the Vendor's requirements.

All self-insured retentions shall appear on the certificate(s) and shall be subject to approval by the County. At the option of the County, the insurer shall reduce or eliminate such self-insured retentions, or the vendor or subcontractor shall be required to procure a bond guaranteeing payment of losses and related claims expenses.

The County shall be exempt from, and in no way liable for, any sums of money, which may represent a deductible or self-insured retention in any insurance policy. The payment of such deductible or self-insured retention shall be the sole responsibility of the vendor and/or sub contractor providing such insurance.

Failure to obtain and maintain such insurance as set out above will be considered a breach of contract and may result in termination of the contract for default.

Neither approval by the County of any insurance supplied by the vendor or Subcontractor(s), nor a failure to disapprove that insurance, shall relieve the vendor or Subcontractor(s) of full responsibility for liability, damages, and accidents as set forth herein.

Section 1.9: Bonding Requirements

Not applicable to this solicitation

Section 1.10: Completion of Work From Date Of Purchase Order

The vendor shall state in its offer the number of calendar days from the date of the purchase order in which it will guarantee to complete the work. **The completion date shall not exceed thirty (45) calendar days after date of purchase order.**

All work shall be performed in accordance with good commercial practice. The work schedule and completion dates shall be adhered to by the vendor(s), except in such cases where the completion date will be delayed due to acts of God, strikes, or other causes beyond the control of the vendor. In these cases, the vendor shall notify the County of the delays in advance of the original completion so that a revised delivery schedule can be appropriately considered by the County.

Should the vendor(s) to whom the contract(s) is awarded fail to complete the work within the number of days stated in its offer, or the "not-to-exceed" timeframe cited above, it is hereby agreed and understood that the County reserves the authority to cancel the contract with the vendor and to secure the services of another vendor to complete the work. If the County exercises this authority, the County shall be responsible for reimbursing the vendor for work which was completed and found acceptable to the County in accordance with the contract specifications. The County may, at its option, demand payment from the vendor, through an invoice or credit memo, for any additional costs over and beyond the original contract price which were incurred by the County as a result of having to secure the services of another vendor. If the incumbent vendor fails to honor this invoice or credit memo, the County may terminate the contract for default.

Section 1.11: Acceptance of Goods or Services

The product(s) delivered as a result of an award from this solicitation shall remain the property of the contractor, and services rendered under the contract will not be deemed complete, until a physical inspection and actual usage of the product(s) and/or service(s) is (are) accepted by the County and shall be in compliance with the terms herein, fully in accord with the specifications and of the highest quality.

Any goods and/or services purchased as a result of this solicitation and/or contract may be tested/inspected for compliance with specifications. In the event that any aspect of the goods or services provided is found to be defective or does not conform to the specifications, the County reserves the right to terminate the contract or initiate corrective action on the part of the vendor, to include return of any non-compliant goods to the vendor at the vendor's expense, requiring the vendor to either provide a direct replacement for the item, or a full credit for the returned item. The vendor shall not assess any additional charge(s) for any conforming action taken by the County under this clause. The County will not be responsible to pay for any product or service that does not conform to the contract specifications.

In addition, any defective product or service or any product or service not delivered or performed

by the date specified in the purchase order or contract, may be procured by the County on the open market, and any increase in cost may be charged against the awarded contractor. Any cost incurred by the County in any re-procurement plus any increased product or service cost shall be withheld from any monies owed to the contractor by the County for any contract or financial obligation.

Section 1.11.1: Deficiencies in Work to be Corrected by the Vendor

The vendor shall promptly correct all apparent and latent deficiencies and/or defects in work, and/or any work that fails to conform to the contract documents regardless of project completion status. All corrections shall be made within five (5) calendar days after such rejected defects, deficiencies, and/or non-conformances are verbally reported to the vendor by the County's project administrator, who may confirm all such verbal reports in writing. The vendor shall bear all costs of correcting such rejected work. If the vendor fails to correct the work within the period specified, the County may, at its discretion, notify the vendor, in writing, that the vendor is subject to contractual default provisions if the corrections are not completed to the satisfaction of the County within five (5) calendar days of receipt of the notice. If the vendor fails to correct the work within the period specified in the notice, the County shall place the vendor in default, obtain the services of another vendor to correct the deficiencies, and charge the incumbent vendor for these costs, either through a deduction from the final payment owed to the vendor or through invoicing. If the vendor fails to honor this invoice or credit memo, the County may terminate the contract for default.

Section 1.12: Warranty

The vendor agrees that, unless expressly stated otherwise in the bid or proposal, the product and/or service furnished as a result of an award from this solicitation shall be covered by the most favorable commercial warranty the vendor gives to any customer for comparable quantities of products and/or services and the rights and remedies provided herein are in addition to said warranty and do not limit any right afforded to the County by any other provision of this solicitation.

The vendor hereby acknowledges and agrees that all materials, except where recycled content is specifically requested, supplied by the vendor in conjunction with this solicitation and resultant contract shall be new, warranted for their merchantability, and fit for a particular purpose.

Section 1.13 Delivery and Completion of Solicitation Response

Section 1.13.1: Delivery of Solicitation Response

Unless a package is delivered by the vendor in person, all incoming mail from the U.S. Postal Service and any package delivered by a third party delivery organization (FedEx, UPS, DHL, private courier, etc.) will be opened for security and contamination inspection by the Lake County Clerk of the Circuit Court Mail Receiving Center in an off-site secure controlled facility prior to delivery to any Lake County Government facility, which includes the Lake County Office of Procurement Services.

To be considered for award, a bid or proposal must be received and accepted in the Office of Procurement Services prior to the date and time established within the solicitation. A response will not be considered for award if received in the Office of Procurement Services after the official due date and time regardless of when or how it was received by the Lake County Clerk of Court Mail Receiving Center. Allow sufficient time for transportation and inspection.

Each package shall be clearly marked with the applicable solicitation number, title, and company name. Ensure that your bid or proposal is securely sealed in an opaque envelope/package to provide confidentiality of the bid or proposal prior to the due date stated in the solicitation.

If you plan on submitting your bid or proposal **IN PERSON**, please bring it to:

LAKE COUNTY PROCUREMENT SERVICES
315 W. MAIN STREET
4TH FLOOR, ROOM 441
TAVARES, FLORIDA

If you submit your bid or proposal by the **UNITED STATES POSTAL SERVICE (USPS),** please mail it to:

LAKE COUNTY PROCUREMENT SERVICES
PO BOX 7800
TAVARES, FL 32778-7800

If you submit your bid or proposal by a **THIRD PARTY CARRIER** such as FedEx, UPS, or a private courier, please send it to:

LAKE COUNTY PROCUREMENT SERVICES
MAIL RECEIVING CENTER
32400 COUNTY ROAD 473
LEESBURG, FL 34788

Facsimile (fax) or electronic submissions (e-mail) will not be accepted.

Section 1.13.2: Completion Requirements for Invitation to Bid

Two (2) signed original bids and one (1) complete copy of the bid submitted by the vendor shall be sealed and delivered to the Office of Procurement Services no later than the official bid due date and time. Any bid received after this time will not be considered and will be returned unopened to the submitter. The County is not liable or responsible for any costs incurred by any Bidder in responding to this ITB including, without limitation, costs for product and/or service demonstrations if requested.

When you submit your bid, you are making a binding offer to the County and are agreeing to all of the terms and conditions in this Invitation to Bid. Use only the form(s) provided in this document. If you make any change to the content or format of any form, the County may disqualify your offer. All information shall be legible and either written in ink or typewritten. If

you make a correction or change on any document, the person signing the bid proposal must initial the change. The bid shall be manually signed in **BLUE INK** by an official authorized to legally bind the Bidder to its provisions.

COMPLETION OF BID PACKAGE: The vendor shall complete all required entries in Section 4 of the bid form such as, but not limited to, pricing pages, signature, certifications, references, and acknowledgement of any solicitation addenda. The vendor shall submit the entire solicitation with all Section 4 entries completed in the number of copies specified to the address specified in this solicitation. The vendor shall also submit any supporting documents (to include proof of insurability and provision of bid bonds as required), samples, and/or descriptive literature required by any of the provisions in Section 2 of the solicitation in a separate sealed envelope / package marked "Literature for Bid (Number)." Do not indicate bid prices on literature.

Specific Completion Directions:

- Pricing shall be completed as directed within Section 4.
- Initial and date in **BLUE INK** the appropriate space(s) for each addendum you received for this ITB.
- Insert any prompt payment discount that you will offer. Note payment is NET 30 DAYS otherwise.
- Complete all certifications included within Section 4 of the solicitation.
- Complete the reference information sheets (include at least three references) contained within the solicitation.
- Complete the vendor information, and sign the bid (IN BLUE INK) in the spaces provided in Section 4 of the solicitation.
- If insurance is required, submit either a certificate of insurance, or evidence of insurability, that is in compliance with the stated insurance requirements.
- Submit vendor's W-9 and Business License.

Section 1.14: Accident Prevention and Barricades

Precautions shall be exercised at all times for the protection of persons and property. All vendors performing services under this contract shall conform to all relevant Federal, State and County regulations during the course of such effort. Any fines levied by the above mentioned authorities for failure to comply with these requirements shall be borne solely by the responsible vendor. Barricades shall be provided by the vendor when work is performed in areas traversed by persons, or when deemed necessary by the County Project Manager.

Section 1.15: Certificate of Competency/Licensure, Permits, and Fees

Any person, firm, corporation or joint venture that submits an offer in response to a County solicitation shall, at the time of such offer, hold a valid Certificate of Competency or appropriate current license issued by the State or County Examining Board qualifying said person, firm, corporation or joint venture to perform the work proposed. If work for other trades is required in conjunction with this solicitation and will be performed by a sub-contractor(s) or vendor(s) hired

by the prime/responding vendor, an applicable Certificate of Competency/license issued to the sub-contractor(s)/hired vendor(s) shall be submitted with the prime/responding vendor's offer; provided, however, that the County may at its option and in its best interest allow the prime/responding vendor to supply the sub contractor(s)/hired vendor(s) certificate/license to the County during the offer evaluation period. The prime/responding vendor is responsible to ensure that all required licenses, permits, and fees (to include any inspection fees) required for this project are obtained and paid for, and shall comply with all laws, ordinances, regulations, and building or other code requirements applicable to the work contemplated herein. Damages, penalties, and/or fines imposed on the County or the vendor for failure to obtain required licenses, permits, inspection or other fees, or inspections shall be borne by the vendor.

Section 1.16: Competency of Vendors and Associated Subcontractors

The County may elect to conduct a pre-award inspection of the vendor's facility during the offer evaluation process. Offers will be considered only from firms which are regularly engaged in the business of providing or distributing the goods and/or performing the services as described in the solicitation, and who can produce evidence of a consistent satisfactory record of performance. Vendors must demonstrate that they have sufficient financial support and organization to ensure that they can satisfactorily execute the contract if awarded under the terms and conditions herein stated. In the event that the vendor intends to sub-contract any part of its work to another vendor, or will obtain the goods specifically offered under this contract from another source of supply; the vendor may be required to verify the competency of its sub-contractor or supplier. The County reserves the right, before awarding the contract, to require a vendor to submit such evidence of its qualifications and the qualifications of its sub-contractor as it may deem necessary. The County may consider any evidence available to it of the financial, technical and other qualifications and abilities of any vendor responding hereunder, including past performance with the County, in determining vendor responsibility for the purposes of selecting a vendor for contract award.

Section 1.17: Conflicts Between the Drawings and Specifications

In the event of any conflict between the drawings and specifications contained within this contract, the following guidance shall govern:

A. Addenda shall supersede all other Contract Documents to the extent specified with the Addenda. Subsequent addenda shall supersede prior addenda only to the extent specified.

B. Drawing(s) and specifications are intended to agree and be mutually complete. Any item not contained within the drawing(s), but contained in the specifications, or vice-versa, shall be provided and/or executed as shown in either the drawing(s) or specifications at no extra cost to the County. Should anything not included in either the drawing(s) and the specifications be necessary for the proper construction and/or operation of the work herein specified, or should any error or disagreement between the specifications and drawing(s) exist or appear to exist, the vendor shall not derive unjust benefit thereby, or use such disagreement counter to the best interests of the County. If the discrepancy is noted before initial submission of offers, or before contract award, the vendor shall immediately advise the designated procurement agent of the perceived discrepancy. If the discrepancy is noted after award, the vendor shall immediately

advise the cognizant user department project manager, and await that individual's resultant direction, before proceeding with the work in question.

Section 1.18: "Equal" Product Can be Considered Except For "No Substitute" Items

If a product or services requested by this ITB has been identified in the specifications by a brand name, **and has not been notated as a "No Substitute" item**, such identification is intended to be descriptive and not restrictive, and is to indicate the quality and characteristics of product or service that will be acceptable. **An alternate product will not be considered for any item notated "No Substitute".**

Unless the vendor clearly indicates in its bid or proposal that it is proposing an alternate product, the bid or proposal shall be considered as offering the same brand name referenced in the specifications.

Vendors offering an alternate product will be considered for award if such product is clearly identified in the bid or proposal and is determined by the County to fully meet the salient characteristic requirements listed in the specifications. If the vendor proposes to furnish an alternate product or service, the brand name of the product or service to be furnished shall be clearly identified. The evaluation of the bid or proposal and the determination as to acceptability of the alternate product or service shall be the responsibility of the County and will be based upon information furnished by the vendor. The County will not be responsible for locating or securing any information which is not included in the bid or proposal. To ensure that sufficient information is available, the vendor shall furnish as part of the bid or proposal all descriptive material necessary for the County to determine whether the product offered meets the salient characteristics required by the specifications.

Section 1.19: Furnish and Install Requirements

The specifications and/or statement of work contained within this solicitation describe the various functions and classes of work required as necessary for the completion of the project. Any omissions of inherent technical functions or classes of work within the specifications and/or statement of work shall not relieve the bidder from furnishing, installing or performing such work where required for the satisfactory completion of the project. The vendor shall also be required to provide adequate general user training to County personnel on the appropriate use of the materials or products as and if necessary.

Section 1.20: Labor, Materials, and Equipment Shall be Supplied by the Vendor

Unless otherwise stated in this solicitation the vendor shall furnish all labor, material and equipment necessary for satisfactory contract performance. When not specifically identified in the technical specifications, such materials and equipment shall be of a suitable type and grade for the purpose. All material, workmanship, and equipment shall be subject to the inspection and approval of the County's Project Manager.

Section 1.21: Protection of Property

All existing structures, utilities, services, roads, trees, shrubbery, and property in which the County has an interest shall be protected against damage or interrupted services at all times by the vendor during the term of this contract; and the vendor shall be held responsible for repairing or replacing property to the satisfaction of the County which is damaged by reason of the vendor's operation on the property. In the event the vendor fails to comply with these requirements, the County reserves the right to secure the required services and charge the costs of such services back to the vendor.

Section 1.22: Safety

The vendor shall be responsible for initiating, maintaining and supervising all safety precautions and programs in connection with the work and for complying with all requirements of the Occupational Safety and Health Administration Act (OSHA). The vendor shall take all necessary precautions for the safety of and shall provide the necessary protection to prevent damage, injury or loss to persons or property.

The vendor shall provide all standard equipment, work operations, safety equipment, personal protective equipment, and lighting required or mandated by State, Federal, OSHA, or Americans with Disabilities Act of 1990 (ADA) regulations.

The vendor shall designate a competent person of its organization whose duty shall be the prevention of accidents at this site. This person shall be literate and able to communicate fully in the English language because of the necessity to read job instructions and signs, as well as the need for conversing with management personnel. This person shall be the vendor's superintendent unless otherwise designated in writing by the vendor to the Contract Manager.

Section 1.23: Special Notice to Vendors Regarding Federal and/or State Requirements

Upon award of a contract resulting from this solicitation, the vendor shall utilize the U.S. Department of Homeland Security's E-Verify system in accordance with the terms governing use of the system to confirm the employment eligibility of:

1) All persons employed by the vendor during the term of the contract to perform employment duties within Lake County; and
2) All persons, including subcontractors, assigned by the vendor to perform work pursuant to the contract.

SCOPE OF SERVICES

Vendor shall provide all labor, materials, equipment, fuel and other incidental costs and supervision necessary for the installation of 5000 linear feet of 8 foot high 6 gauge black vinyl coated chain link fence with schedule 40 posts and one (1) thirty-six (36) foot wide maintenance entry gate (see attached photo) located at South Lake Regional Park, Max Hooks Road and Cathedral Lane, Groveland, Florida 34736.

The Contractor is required to hire a Licensed Surveyor to locate and mark the boundary lines (all of the East and South Boundary lines and a portion of the North boundary lines. Price for this service shall be included as a part of this bid. All fencing to be installed thirty (30) feet inside the South and East boundary lines and one foot on the North boundary line within the County owned property.

Fence Details:

- Eight foot high black vinyl coated 6 gauge chain link fence with schedule 40 posts is required. Steel chart for schedule of sizes of member is as stated below.
- Height of fence – 8 feet
- Diameter of line posts – 2 ½ inch diameter
- Maximum post spacing – 8 feet
- Corner and end posts – 3 inch diameter
- Top, mid and line post – 1 5/8 inch diameter
- Depth of posts into footing (line, end, gate or corner post) – 3 feet
- Diagonal braces – ½ inch diameter
- Mesh to be placed on the outside of the fencing
- Tie Wire: #6 W and M gauge aluminum ties shall be 15 o.c. for rails. Ties to be 12" o.c. for all posts. End of ties shall be wound in a telegraph twist, 2 ½ turns. Horizontal braces at corner and end posts shall be 1 5/8 inches.

Items to be noted:

- The Contractors installation, when completed, shall match all eight (8) foot black vinyl coated chain link fencing at other Lake County parks. An example of this is Minneola Athletic Complex, 1300 Fosgate Road, Minneola, Florida.
- All fencing and gate are to be installed as shown on attached plan and Parks direction.
- Vendor shall submit fencing sample to Parks and Trails Division for approval prior to contractor delivering materials to site.
- Vendor shall verify and coordinate all work to field locations and dimension.

Site Conditions:

Any required mowing, clearing, pruning or trimming on the pathway shall be a part of this solicitation. Contractor is responsible for filling, grading and compacting any swale areas where fence installation is required. Fill material is available inside the property and will need to be excavated, loaded and transported by the Contractor.

Acceptance:

Any work not installed in accordance with the plans and specifications shall be rejected by the County and removed and replaced at the Contractors expense.

Business Hours of Operation:
Work shall be performed during regular working hours Monday through Friday, 8:00 AM to 5:00 PM. At no time shall the vendor's work interfere with the day-to-day operations.

Clean-Up:
All unusable materials and debris shall be removed from the premises at the end of each workday, and disposed of in an appropriate manner. Upon final completion, the vendor shall thoroughly clean up all areas where work has been involved as mutually agreed with the associated user department's project manager.

Estimated Fees for the Work to be Performed:
The vendor is to acquire and pay for all permits and related fees associated by submitting a Building Permit Application and fee of $75.00 to:
Economic Growth Department
Building Services
315 W. Main Street, Fifth Floor
Tavares, Florida 32778

The Building Permit Application can be found at the below link:
http://www.lakecountyfl.gov/pdfs/growth_management/building_services/BF03_building_permit_application.pdf

Additionally, the vendor is to acquire and pay for a Zoning Clearance for Commercial Use by submitting the survey supplied by a licensed surveyor, and fee of $100.00 to:
Economic Growth Department
Planning and Community Design Division
315 W. Main Street, Fifth Floor
Tavares, Florida 32778

Should there be an unusual need for additional fees at a value in excess of that amount be identified during the course of normal project performance, the vendor may, to the degree appropriate, be reimbursed for these additional costs.

Warranty:
The contractor shall provide a one year warranty on all materials and labor. Defections shall be made good promptly, within the warranty period.

3.1 DEFINITIONS

Addenda: A written change to a solicitation.
Bid: Shall refer to any offer(s) submitted in response to this ITB.
Bidder: Refers to any entity that submitted a bid under an ITB.
Contract: The agreement to perform the services set forth in this solicitation. The contract will be comprised of the solicitation document signed by both parties with any addenda and other attachments specifically incorporated.
Contractor: The vendor to which award has been made.
County: Shall refer to Lake County, Florida.
Invitation to Bid (ITB): Shall mean this solicitation document, including any and all addenda. An ITB contains well-defined terms, conditions, and specifications, and is awarded to the lowest priced responsive and responsible bidder.
Modification: A written change to a contract.
Responsible: Refers to a bidder that has the capacity and capability to perform the work required under an Invitation to Bid, and is otherwise eligible for award.
Responsive: Refers to a bidder that has taken no exception or deviation from the terms, conditions, and specifications in an ITB.
Solicitation: The written document requesting either bids or proposals from the marketplace.
Vendor: A general reference to any entity responding to this solicitation or performing under any resulting contract.

The County has established that the words "shall", "must", or "will" are equivalent within this ITB and indicate a mandatory requirement which shall not be waived by the County.

3.2 INSTRUCTIONS TO BIDDERS

A. Bidder Qualification

It is the policy of the County to encourage full and open competition among all available qualified vendors. All vendors regularly engaged in the type of work specified in the solicitation are encouraged to submit bids. To be recommended for award the County requires that vendors provide evidence of compliance with the requirements below upon request:

1. Disclosure of Employment
2. Disclosure of Ownership
3. Drug-Free Workplace
4. W-9 and 8109 Forms – The vendor must furnish these forms upon request as required by the Internal Revenue Service.
5. Social Security Number – The vendor must provide a copy of the primary owner's social security card if the social security number is being used in lieu of the Federal Identification Number (F.E.I.N.)
6. Americans with Disabilities Act (A.D.A.)
7. Conflict of Interest
8. Debarment Disclosure Affidavit
9. Nondiscrimination
10. Family Leave
11 Antitrust Laws – By acceptance of any contract, the vendor agrees to comply with all applicable antitrust laws.

B. Public Entity Crimes

Pursuant to Section 287.133(2)(a) of the Florida Statutes, a person or affiliate who has been placed on the convicted vendor list following a conviction for a public entity crime may not submit a bid on a contract to provide any goods or services to a public entity, may not submit a bid on a contract with a public entity for the construction or repair of a public building or public work, may not submit bids on leases of real property to a public entity, may not be awarded or perform as a contractor, supplier, subcontractor, or consultant under a contract with any public entity, and may not transact business with any public entity in excess of the threshold amount provided in Section 287.017 of the Florida Statutes, for CATEGORY TWO for a period of 36 months from the date of being placed on the convicted vendor list.

C. Request for Additional Information

Any communication or inquiries, except for clarification of process or procedure already contained in the solicitation, are to be made in writing to the attention of the procurement representative identified in the solicitation no later than five (5) working days prior to the bid due date. Such inquiries shall contain the requester's name, address, and telephone number. The Procurement Services Office may issue an addendum in response to any inquiry received, prior to bid opening, which changes, adds to, or clarifies the terms, provisions, or requirements of the solicitation. The bidder should not rely on any statement or explanation whether written or verbal, other than those made in this solicitation document or in any addenda issued. Where there appears to be a conflict between this solicitation and any addenda, the last addendum issued shall prevail. It is the bidder's responsibility to ensure receipt and to acknowledge all addenda and any accompanying documentation. Failure to acknowledge each addendum may prevent the bid from being considered for award

D. Contents of Solicitation and Bidders' Responsibilities

It is the responsibility of the bidder to become thoroughly familiar with the requirements, terms, and conditions of this solicitation. Stated unawareness of contractual terms and conditions will not be accepted as a basis for varying the requirements of the County or the amount to be paid to the vendor.

E. Restricted Discussions

From the date of issuance of this solicitation until final County action, vendors should <u>not</u> discuss the solicitation with any employee, agent, or any other representative of the County except as authorized by the designated procurement representative. The only communications that shall be considered pertinent to this solicitation are written documents from the vendor addressed to the designated procurement representative and relevant documents promulgated by the designated procurement representative.

F. Change to, Withdrawal of, or Mistake in, Bid

<u>Changes to Bid</u> - Prior to bid opening, a bidder may change its bid by submitting a new bid with notice on the firm's letterhead, signed by an authorized agent, stating that the new submittal replaces the original submittal. The new submittal shall contain all information as required for submitting the original bid.

<u>Withdrawal of Bid</u> - A bid may be withdrawn, either physically or by written notice, at any time prior to the bid due date. If withdrawn by written notice, that notice must be addressed to, and received by, the designated procurement representative prior to the bid due date and time. A bid may also be withdrawn after expiration of the specified bid acceptance period, and prior to award, by submitting a letter to the designated procurement representative. The withdrawal letter must be on company letterhead and signed by an authorized agent of the bidder.

<u>Mistake in Bid</u> - Any allegation of mistake in Bid shall be treated on a case-by-case basis. It is to be assumed that any alteration in bid price after receipt of bids will be exceptional in nature, and will be allowed only when substantiated by current legal precedence.

G. Conflicts within the Solicitation

Where there appears to be a conflict between contractual terms and conditions, the technical specifications, the pricing section, or any addendum issued, the order of precedence shall be: last addendum issued, the pricing section, the technical specifications, the special, and then general conditions. It is incumbent upon the vendor to identify such conflicts prior to the bid response date.

H. Prompt Payment Terms

It is the policy of the County that payment for all purchases by County agencies shall be made in a timely manner and that interest payments will be made on late payments in accordance with Part VII, Chapter 218, Florida Statutes, known as the Florida Prompt Payment Act. The bidder may offer cash discounts for prompt payments; however, such discounts will not be considered in determining the lowest price during bid evaluation. Bidders are requested to provide prompt payment terms in the space provided on the signature page of the solicitation.

3.3 PREPARATION OF BIDS

A. The Pricing Section of this solicitation defines the goods or services to be purchased, and must be completed and submitted with the bid. Use of any other form or alteration of the form may result in the rejection of the bid.
B. The bid submitted must be legible, and completed using typewriter, computer or ink. Any entry change must be crossed out and initialed in ink. Failure to comply with these requirements may cause the bid to be rejected.

C. An authorized agent of the bidder's firm must sign the bid. FAILURE TO SIGN THE BID MAY RENDER THE BID NON-RESPONSIVE.

D. The bidder may be considered non-responsive if bids are conditioned to modifications, changes, or revisions to the terms and conditions of this solicitation.

E. The bidder may submit alternate bid(s) for the same solicitation provided that such offer is allowable under the terms and conditions. The alternate bid must meet or exceed the minimum requirements and be submitted as a separate bid marked "Alternate Bid".

F. When there is a discrepancy between the unit prices and any extended prices, the unit prices will prevail.

G. Any bid received after the stipulated bid due date and time through no fault of the County will be considered late, and except under the most exceptional circumstances, not be considered for award.

H. Unless otherwise specified in the solicitation, prices quoted shall be F.O.B. Destination.

3.4 COLLUSION

Where two (2) or more related parties, as defined herein, each submit a bid for the same contract, or evidence any prior understanding, agreement, or connection in such regard, such bids shall be presumed to be collusive. Related parties shall mean bidder or principals thereof that have a direct or indirect ownership interest in another bidder for the same contract or in which a parent company or the principals thereof of one bidder have a direct or indirect ownership interest in another bidder for the same contract. Bids found to be collusive shall be rejected. Bidders which have been found to have engaged in collusion may be considered non-responsible, and may be suspended or debarred. Any contract resulting from collusive bidding may be terminated for default.

3.5 PROHIBITION AGAINST CONTINGENT FEES

The vendor warrants that they have not employed or retained any company or person, other than a bona fide employee working solely for the vendor to solicit or secure the contract and that they have not paid or agreed to pay any person, company, corporation, individual, or firm, other than a bona fide employee working solely for the vendor, any consideration contingent upon or resulting from the award or making of the contract.

3.6 CONTRACTING WITH COUNTY EMPLOYEES

Any County employee or member of his or her immediate family seeking to contract with the County shall seek a conflict of interest opinion from the County Attorney prior to submittal of a response to contract with the County. The affected employee shall disclose the employee's assigned function within the County and interest or the interest of his or her immediate family in the proposed contract and the nature of the intended contract.

3.7 INCURRED EXPENSES

This solicitation does not commit the County to award nor be responsible for any cost or expense which may be incurred by any bidder in preparing or submitting a bid, or any cost or expense incurred prior to the execution of a purchase order or contract. By submitting a bid, the bidder also agrees that the County bears no responsibility for any costs of the bidder associated with any administrative or judicial proceedings resulting from this solicitation process.

3.8 COUNTY IS TAX-EXEMPT

When purchasing on a direct basis, the County is generally exempt from Federal Excise Taxes and all State of Florida sales and use taxes. The County will provide an exemption certificate upon request by the seller for such purchases. Except for item(s) specifically identified by the vendor and accepted by the County for direct County purchase under the Sales Tax Recovery Program, contractors doing business with the County are not exempt from paying sales tax to their suppliers for materials needed to fulfill contractual obligations with the County, nor is any vendor authorized to use the County Tax Exemptions for such purchases.

3.9 PROPRIETARY/CONFIDENTIAL INFORMATION

Bidders are hereby notified that all information submitted as part of a bid will be available for public inspection in compliance with Chapter 119 of the Florida Statutes (the "Public Record Act."). The bidder should not submit any information which the bidder considers proprietary or confidential. The submission of any information to the County in connection with any solicitation shall be deemed conclusively to be a waiver of any protection from release of the submitted information unless such information is exempt or confidential under the Public Records Act.

3.10 CANCELLATION OF SOLICITATION

The County reserves the right to cancel, in whole or in part, any Invitation to Bid when it is in the best interest of the County.

3.11 AWARD

A. Unless otherwise allowed by statute or ordinance, award will be made to the lowest priced responsive and responsible bidder. The County reserves the right to reject any and all bids, to waive non-material irregularities or technicalities and to re-advertise for all or any part of this solicitation as deemed in its best interest. The County shall be the sole judge of its best interest.

B. When there are multiple line items in a solicitation, the County reserves the right to award on an individual item basis, any combination of items, total low bid or in whichever manner deemed in the best interest of the County. This provision specifically supersedes any method of award criteria stated in the solicitation when such action is clearly necessary to protect the best interests of the County.

C. The County reserves the right to reject any and all bids if it is determined that prices are excessive or determined to be unreasonable, or it is otherwise determined to be in the County's best interest to do so.

D. The County reserves the right to negotiate prices with the low bidder, provided that the scope of work is not amended.

E. Award will only be made to firms that satisfy all legal requirements to do business with the County. The County may conduct a pre-award inspection of the bidder's site or conduct a pre-award qualification meeting to determine the responsibility and capacity of the bidder to perform. Award may be predicated on compliance with and submittal of all required documents as stipulated in the solicitation.

F. The bidder's performance as prime or subcontractor on previous County contracts shall be taken into account in evaluating the responsibility of a responding bidder.

G. All tie bids will be resolved in consonance with current written procedure in that regard.

H. A vendor wishing to protest any award decision resulting from this solicitation shall do as provided for in the County's Purchasing Procedure Manual.

3.12 GENERAL CONTRACT CONDITIONS

The contract shall be binding upon and shall inure to the benefit of each of the parties and of their respective successors and permitted assigns. The contract may not be amended, released, discharged, rescinded or abandoned, except by a written instrument duly executed by each of the parties hereto. The failure of any party hereto at any time to enforce any of the provisions of the contract will in no way constitute or be construed as a waiver of such provision or of any other provision hereof, nor in any way affect the validity of, or the right thereafter to enforce, each and every provision of the contract. Any dispute arising during the course of contract performance that is not readily rectified by coordination between the vendor and the County user department shall be referred to Procurement Services office for resolution.

3.13 OTHER AGENCIES

With the consent of the vendor, other agencies may make purchases in accordance with the contract. Such purchases shall be governed by the same terms and conditions as stated herein with the exception of the change in agency name.

3.14 CONTRACT EXTENSION

The County has the unilateral option to extend a contract for up to ninety (90) calendar days beyond the current contract period. In such event, the County will notify the vendor(s) in writing of such extensions. The contract may be extended beyond the initial ninety (90) day extension upon mutual agreement between the

County and the vendor(s). Exercise of the above options requires the prior approval of the Procurement Services Manager.

3.15 WARRANTY

All warranties express and implied, shall be made available to the County for goods and services covered by this solicitation. All goods furnished shall be fully guaranteed by the vendor against factory defects and workmanship. At no expense to the County, the vendor shall correct any and all apparent and latent defects that may occur within the manufacturer's standard warranty period. The special conditions of the solicitation may supersede the manufacturer's standard warranty.

3.16 ESTIMATED QUANTITIES

Estimated quantities or dollars are for bidder's guidance only. No guarantee is expressed or implied as to quantities or dollar value that will be used during the contract period. The County is not obligated to place any order for a given amount subsequent to the award of this solicitation. The County may use estimated quantities in the award evaluation process. Estimated quantities do not contemplate or include possible additional quantities that may be ordered by other entities that may utilize this contract. In no event shall the County be liable for payments in excess of the amount due for quantities of goods or services actually ordered.

3.17 NON-EXCLUSIVITY

It is the intent of the County to enter into an agreement that will satisfy its needs as described within this solicitation. However, the County reserves the right to perform, or cause to be performed, all or any of the work and services herein described in the manner deemed to represent its best interests. In no case will the County be liable for billings in excess of the quantity of goods or services actually provided under this contract.

3.18 CONTINUATION OF WORK

Any work that commences prior to, and will extend, beyond the expiration date of the current contract period shall, unless terminated by mutual written agreement between the County and the vendor, continue until completion without change to the then current prices, terms and conditions.

3.19 LAWS, RULES, REGULATIONS AND LICENSES

The vendor shall comply with all federal, state, and local laws and regulations applicable to provision of the goods and/or services specified in this solicitation. During the term of the contract the vendor assures that it is in compliance with Title VII of the 1964 Civil Rights Act, as amended, and the Florida Civil Rights Act of 1992, in that the vendor does not on the grounds of race, color, national origin, religion, sex, age, disability or marital status, discrimination in any form or manner against the end/or employees or applicants for employment. The vendor understands that any contract is conditioned upon the veracity of this statement.

3.20 SUBCONTRACTING

Unless otherwise stipulated herein, the vendor shall not subcontract any portion of the work without the prior written consent of the County. Subcontracting without the prior consent of the County may result in termination of the contract for default.

3.21 ASSIGNMENT

The vendor shall not assign or transfer any contract resulting from this solicitation, including any rights, title or interest therein, or its power to execute such contract to any person, company or corporation without the prior written consent of the County. This provision specifically includes any acquisition or hostile takeover of the awarded vendor. Failure to comply in this regards may result in termination of the contract for default.

3.22 RESPONSIBILITY AS EMPLOYER

The employee(s) of the vendor shall be considered at all times its employee(s), and not an employee(s) or agent(s) of the County, The contractor shall provide employee(s) capable of performing the work as required. The County may require the contractor to remove any employee it deems unacceptable. All employees of the contractor may be required to wear appropriate identification.

3.23 INDEMNIFICATION

To the extent permitted by law, the vendor shall indemnify and hold harmless the County and its officers, employees, agents and instrumentalities from any and all liability, losses or damages, including attorney's fees and costs of defense, which the County or its officers, employees, agents or instrumentalities may incur as a result of claims, demands, suits, causes of actions or proceedings of any kind or nature arising out of, relating to or resulting from the performance of the agreement by the vendor or its employees, agents, servants, partners, principals or subcontractors. The vendor shall pay all claims and losses in connection therewith, and shall investigate and defend all claims, suits or actions of any kind or nature in the name of the County, where applicable, including appellate proceedings, and shall pay all costs, judgments, and attorney's fees which may be incurred thereon. The vendor expressly understands and agrees that any insurance protection required by this Agreement or otherwise provided by the vendor shall in no way limit the responsibility to indemnify, keep and save harmless and defend the County or its officers, employees, agents and instrumentalities as herein provided.

3.24 MODIFICATION OF CONTRACT

Any contract resulting from this solicitation may be modified by mutual consent of duly authorized parties, in writing through the issuance of a modification to the contract and/or purchase order as appropriate. This presumes the modification itself is in compliance with all applicable County procedures.

3.25 TERMINATION FOR CONVENIENCE

The County, at its sole discretion, reserves the right to terminate this contract upon thirty (30) days written notice. Upon receipt of such notice, the vendor shall not incur any additional costs under this contract. The County shall be liable only for reasonable costs incurred by the vendor prior to notice of termination. The County shall be the sole judge of "reasonable costs."

3.26 TERMINATION DUE TO UNAVAILABILITY OF CONTINUING FUNDING

When funds are not appropriated or otherwise made available to support continuation of performance in a current or subsequent fiscal year, the contract shall be cancelled and the vendor shall be reimbursed for the reasonable value of any non-recurring costs incurred amortized in the price of the supplies or services/tasks delivered under the contract.

3.27 TERMINATION FOR DEFAULT

The County reserves the right to terminate this contract, in part or in whole, or effect other appropriate remedy in the event the vendor fails to perform in accordance with the terms and conditions stated herein. The County further reserves the right to suspend or debar the vendor in accordance with the County ordinances, resolutions and/or administrative orders. The vendor will be notified by letter of the County's intent to terminate. In the event of termination for default, the County may procure the required goods and/or services from any source and use any method deemed in its best interest. All re-procurement cost shall be borne by the vendor.

3.28 FRAUD AND MISREPRESENTATION

Any individual, corporation or other entity that attempts to meet its contractual obligations through fraud, misrepresentation or material misstatement, may be debarred for up to five (5) years. The County as a further sanction may terminate or cancel any other contracts with such individual, corporation or entity with such vendor held responsible for all direct or indirect costs associated with termination or cancellation, including attorney's fees.

3.29 RIGHT TO AUDIT

The County reserves the right to require the vendor to submit to an audit by any auditor of the County's choosing. The Contractor shall provide access to all of its records, which relate directly or indirectly to this Agreement at its place of business during regular business hours. The vendor shall retain all records pertaining to this Agreement and upon request make them available to the County for a minimum of three (3) years, or as required by Florida law, whichever is longer, following expiration of the Agreement. The vendor agrees to provide such assistance as may be necessary to facilitate the review or audit by the County to ensure compliance with applicable accounting and financial standards. Additionally, CONTRACTOR agrees to include the requirements of this provision in all contracts with subcontractors and material

suppliers in connection with the work performed hereunder. If an audit inspection or examination pursuant to this section discloses overpricing or overcharges of any nature by the CONTRACTOR to the COUNTY in excess of one percent (1%) of the total contract billings, in addition to making adjustments for the overcharges, the reasonable actual cost of the COUNTY's audit shall be reimbursed to the COUNTY by the CONTRACTOR. Any adjustments and/or payments which must be made as a result of any such audit or inspection of the CONTRACTOR's invoices and/or records shall be made within a reasonable amount of time, but in no event shall the time exceed ninety (90) days, from presentation of the COUNTY's audit findings to the CONTRACTOR.

3.30 PUBLIC RECORDS/ COPYRIGHTS

Pursuant to Section 119.0701, Florida Statutes, the awarded contractor shall comply with the Florida Public Records' laws, and shall: 1. Keep and maintain public records that ordinarily and necessarily would be required by the County in order to perform the services identified herein. 2. Provide the public with access to public records on the same terms and conditions that the County would provide the records and at a cost that does not exceed the cost provided for by law. 3. Ensure that public records that are exempt or confidential and exempt from public records disclosure requirements are not disclosed except as authorized by law. 4. Meet all requirements for retaining public records and transfer, at no cost, to the County all public records in possession of the contractor upon termination of the contract and destroy any duplicate public records that are exempt or confidential and exempt from public records disclosure requirements. All records stored electronically must be provided to the County in a format that is compatible with the information technology systems of the County. Failure to comply with this section shall be deemed a breach of the contact and enforceable as set forth in Section 119.0701, Florida Statutes.

Any copyright derived from this Agreement shall belong to the author. The author and the CONSULTANT shall expressly assign to the COUNTY nonexclusive, royalty free rights to use any and all information provided by the CONSULTANT in any deliverable and/or report for the COUNTY's use which may include publishing in COUNTY documents and distribution as the COUNTY deems to be in the COUNTY's best interests. If anything included in any deliverable limits the rights of the COUNTY to use the information, the deliverable shall be considered defective and not acceptable and the CONSULTANT will not be eligible for any compensation.

3.31 GOVERNING LAWS

The interpretation, effect, and validity of any contract(s) resulting from this solicitation shall be governed by the laws and regulations of the State of Florida, and Lake County, Florida. Venue of any court action shall be in Lake County, Florida. In the event that a suit is brought for the enforcement of any term of the contract, or any right arising there from, the parties expressly waive their respective rights to have such action tried by jury trial and hereby consent to the use of non-jury trial for the adjudication of such suit.

3.32 STATE REGISTRATION REQUIREMENTS

Any corporation submitting a bid in response to this ITB shall either be registered or have applied for registration with the Florida Department of State in accordance with the provisions of Chapter 607, Florida Statutes. A copy of the registration/ application may be required prior to award of a contract. Any partnership submitting a bid in response to this ITB shall have complied with the applicable provisions of Chapter 620, Florida Statutes. For additional information on these requirements, please contact the Florida Secretary of State's Office, Division of Corporations, 800.755.5111 (http://www.dos.state.fl.us).

3.33 PRIME CONTRACTOR

The vendor awarded the contract shall act as the prime contractor and shall assume full responsibility for successful performance of the contract. The vendor shall be considered the sole point of contact with regard to meeting all requirements of the contract. All subcontractors will be subject to advance review by the County in regards to competency and security concerns. After the award of the contract no change in subcontractors will be made without the consent of the County. The vendor shall be responsible for all insurance, permits, licenses, and related matters for any and all subcontractors. Even if the subcontractor is self-insured, the County may require the contractor to provide any insurance certificates required by the work to be performed.

3.34 FORCE MAJEURE

The parties will exercise every reasonable effort to meet their respective obligations hereunder, but shall not be liable for delays resulting from force majeure or other causes beyond their reasonable control, including, but not limited to, compliance with revisions to Government law or regulation, acts of nature, acts or omissions of the other party, fires, strikes, national disasters, wars, riots, transportation problems and/or any other cause whatsoever beyond the reasonable control of the parties. Any such cause may be cause for appropriate extension of the performance period.

3.35 NO CLAIM FOR DAMAGES

No claim for damages or any claim other than for an extension of time shall be made or asserted against the County because of any delays. No interruption, interference, inefficiency, suspension, or delay in the commencement or progress of the Work shall relieve the vendor of duty to perform, or give rise to any right to damages or additional compensation from the County. The vendor's sole remedy shall be the right to seek an extension to the contract time. However, this provision shall not preclude recovery of damages by the vendor for hindrances or delays due solely to fraud, bad faith, or active interference on the part of the County.

3.36 TRUTH IN NEGOTIATION CERTIFICATE

For each contract that exceeds One Hundred Ninety Five Thousand dollars ($195,000.00), any organization awarded a contract must execute a truth-in-negotiation certificate stating that the wage rates and other factual unit costs are accurate, complete, and current, at the time of contracting. Any contract requiring this certificate shall contain a provision that the original contract price and any additions shall be adjusted to exclude any significant sums by which the County determines the contract price was increased due to inaccurate, incomplete, or non-current wage rates and other factual unit costs. All such contract adjustments shall be made within one (1) year following the end of the contract.

3.37 GRANT FUNDING

In the event any part of the contract is to be funded by federal, state, or other local agency monies, the vendor hereby agrees to comply with all requirements of the funding entity applicable to the use of the monies, including full application of requirements involving the use of minority firms, women's business enterprises, and labor surplus area firms. Vendors are advised that payments under the contract may be withheld pending completion and submission of all required forms and documents required of the vendor pursuant to the grant funding requirements.

3.38 TOBACCO PRODUCTS

Due to the acknowledged hazards arising from exposure to tobacco products, and to protect the public and employees' health, safety, comfort and environment, tobacco use is prohibited on any County owned building and property. Tobacco products include both smoking and smokeless tobacco.

ITB TITLE: Fencing for South Lake Community Park

NOTES:

- When purchasing on a direct basis, Lake County is exempt from all taxes (Federal, State, Local). A Tax Exemption Certificate will be furnished upon request for such purchases. **However, the vendor will be responsible for payment of taxes on all materials purchased by the vendor for incorporation into the project (see provision 3.8 for further detail).**
- The vendor shall not alter or amend any of the information (including, but not limited to stated units of measure, item description, or quantity) stated in the Pricing Section. If any quantities are stated in the pricing section as being "estimated" quantities, vendors are advised to review the "Estimated Quantities" clause contained in Section 3 of this solicitation.
- Any bid containing a modifying or "escalator" clause not specifically allowed for under the solicitation will not be considered.
- Unit prices shall govern for all services priced on that basis as requested under this solicitation.
- All pricing shall be FOB Destination unless otherwise specified in this solicitation document.
- All pricing submitted shall remain valid for a 90 day period. By signing and submitting a response to this solicitation, the vendor has specifically agreed to this condition.
- **Vendors are advised to visit our website at http://www.lakecountyfl.gov and register as a potential vendor. Vendors that have registered on-line receive an e-mail notice when the County issues a solicitation matching the commodity codes selected by a vendor during the registration process.**

ACKNOWLEDGEMENT OF ADDENDA

INSTRUCTIONS: Complete Part I or Part II, whichever applies

Part I:

The bidder must list below the dates of issue for each addendum received in connection with this ITB:

Addendum #1, Dated: 6/17/15

Addendum #2, Dated: 6/18/15

Addendum #3, Dated: _____

Addendum #4, Dated: _____

Part II:

☐ No Addendum was received in connection with this ITB.

PRICING SECTION

Provide and install fence at South Lake Regional Park as described in the Statement of Work and any attachments to, this solicitation and includes costs for licensed surveyor, mowing, clearing, pruning, trimming, permitting and zoning clearance.
Lump sum bid for completion of all required work: $ 109,535.00
Vendors shall insert the number of calendar days for completion of work (not-to-exceed forty-five (45) calendar days): 45
Certification of mandatory site examination: Vendors are required to visit the site of the proposed work. By initialing this block: ZB, the vendor confirms compliance with the site inspection requirements stated in Section 1.4 of this solicitation.

By Signing this Bid the Bidder Attests and Certifies that:

- It satisfies all legal requirements (as an entity) to do business with the County.
- The undersigned vendor acknowledges that award of a contract may be contingent upon a determination by the County that the vendor has the capacity and capability to successfully perform the contract.
- The bidder hereby certifies that it understands all requirements of this solicitation, and that the undersigned individual is duly authorized to execute this bid document and any contract(s) and/or other transactions required by award of this solicitation.

Certification Regarding Felony Conviction
Has any officer, director, or an executive performing equivalent duties, of the bidding entity been convicted of a felony during the past ten (10) years? ☐ Yes ☑ No (Check one)

Certification Regarding Acceptance of County VISA-based Payment System
Vendor will accept payment through the County VISA- based payment system: ☑ Yes ☐ No

Reciprocal Vendor Preference:
Vendors are advised the County has established, under Lake County Code, Chapter 2, Article VII, Sections 2-221 and 2-222; a process under which a local vendor preference program applied by another county may be applied in a reciprocal manner within Lake County. The following information is needed to support application of the Code:
1. Primary business location of the responding vendor (city/state): OCALA, FL
2. Does the responding vendor maintain a significant physical location in Lake County at which employees are located and business is regularly transacted: ☐ Yes ☑ No If "yes" is checked, provide supporting detail:

Conflict of Interest Disclosure Certification
Except as listed below, no employee, officer, or agent of the firm has any conflicts of interest, real or apparent, due to ownership, other clients, contracts, or interests associated with this project; and, this bid is made without prior understanding, agreement, or connection with any corporation, firm, or person submitting a proposal for the same services, and is in all respects fair and without collusion or fraud.

General Vendor Information and Bid Signature:

Firm Name: HERCULES FENCE COMPANY INC.
Street Address: 4660 SE MARICAMP RD. OCALA, FL 34480
Mailing Address (if different):
Telephone No.: 352-624-1331 Fax No.: 352-624-3997 E-mail: herculesfenceco@gmail.com
FEIN No. 59 - 3076008 Prompt Payment Terms: 100 % 30 days, net 0
Signature: [signature] Date: 7-7-15
Print Name: RUSTY BUCHKOVICH Title: PROJECT MANAGER

Award of Contract by the County: (Official Use Only)

By signature below, the County confirms award to the above-identified vendor under the above identified solicitation. A separate purchase order will be generated by the County to support the contract.

Vendor awarded as:

☒ Sole vendor
☐ Pre-qualified pool vendor (spot bid)
☐ Secondary vendor for items:
☐ Pre-qualified pool vendor based on price
☐ Primary vendor for items:
☐ Other status:

Signature of authorized County official: [signature] Date: 09.21.15
Printed name: Sandra Rogers Title: Contracting Officer

THE FOLLOWING DOCUMENTS ARE ATTACHED

Attachment 1: Work References
Attachment 2: Park Map
Attachment 3: Gate Sample
Attachment 4: Fence Specifications

WORK REFERENCES

Agency	MARION COUNTY PARKS AND REC
Address	111 SE 25TH AVE
City,State,ZIP	OCALA, FL 34480
Contact Person	ED HOWARD
Telephone	352-239-3461
Date(s) of Service	2000 – CURRENT
Type of Service	FENCING AT VARIOUS PARKS
Comments:	

Agency	CLAY COUNTY DISTRICT SCHOOLS
Address	925 WEST CENTER ST.
City,State,ZIP	GREEN COVE SPRINGS, FL 32043
Contact Person	BRYCE ELLIS
Telephone	904-591-0555
Date(s) of Service	12/2011 – CURRENT
Type of Service	FENCING AT VARIOUS SCHOOLS
Comments:	

Agency	MARION COUNTY ~~PARKS~~ SCHOOL BOARD
Address	1107 SW 7TH RD
City,State,ZIP	OCALA, FL 34474
Contact Person	MIKE HOWELL
Telephone	352-671-6955
Date(s) of Service	1990 – CURRENT
Type of Service	FENCING AT VARIOUS SCHOOLS
Comments:	

State Road 50
Max Hooks Road
8 ft fence
5,000 ft
Gate
Cathedral Lane
5,000 ft of 8 foot high fence
Gate - 36 ft long x 8 ft high
South Lake Regional Park
N
W
E
S
LAKE COUNTY
FLORIDA
Total Acreage: 141
REVISED
FEBRUARY 2, 2015

SAMPLE - EAST LAKE COMMUNITY PARK

GATE PLAN

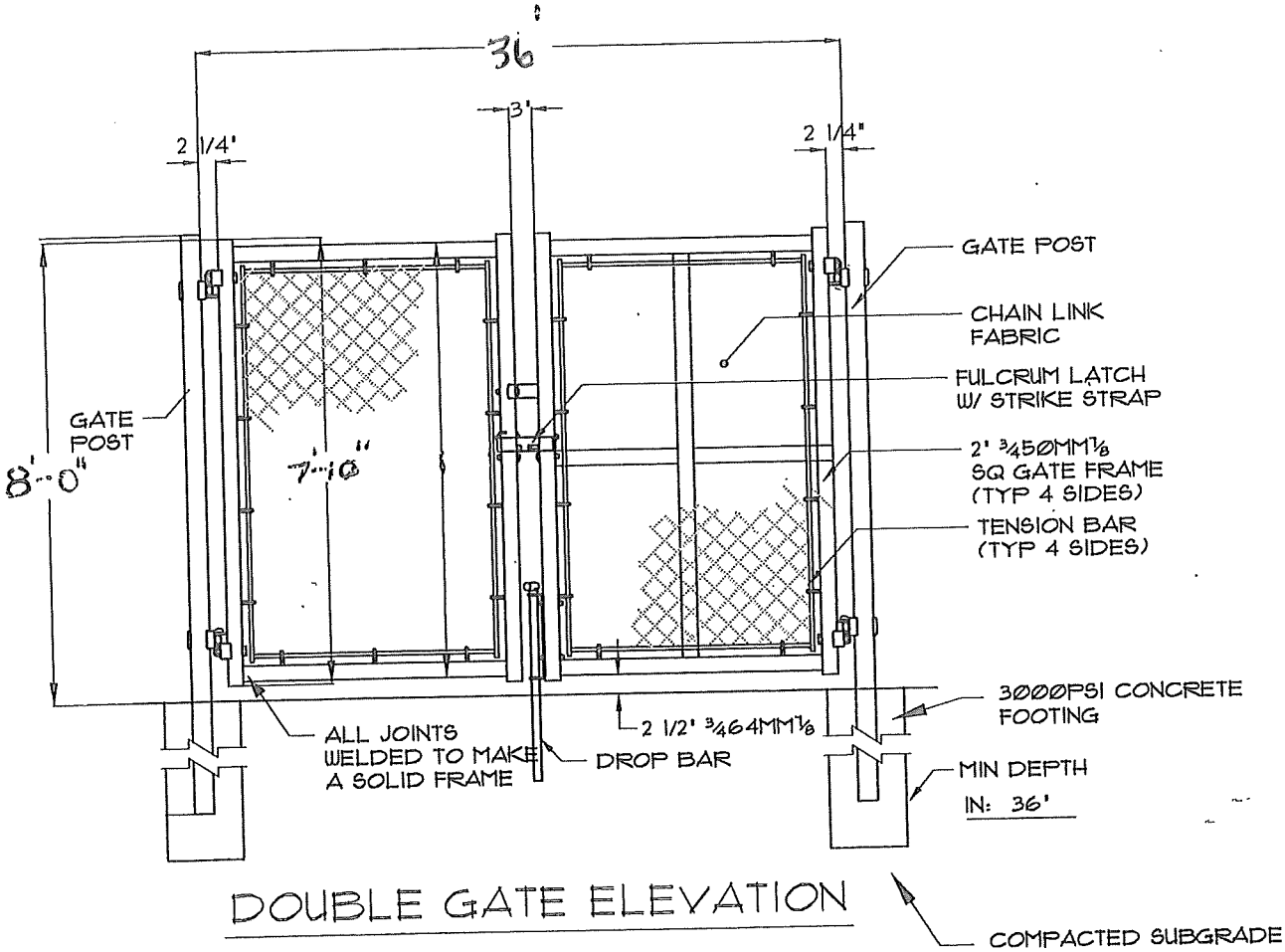

DOUBLE GATE ELEVATION

DOUBLE SWING GATE

SECTION

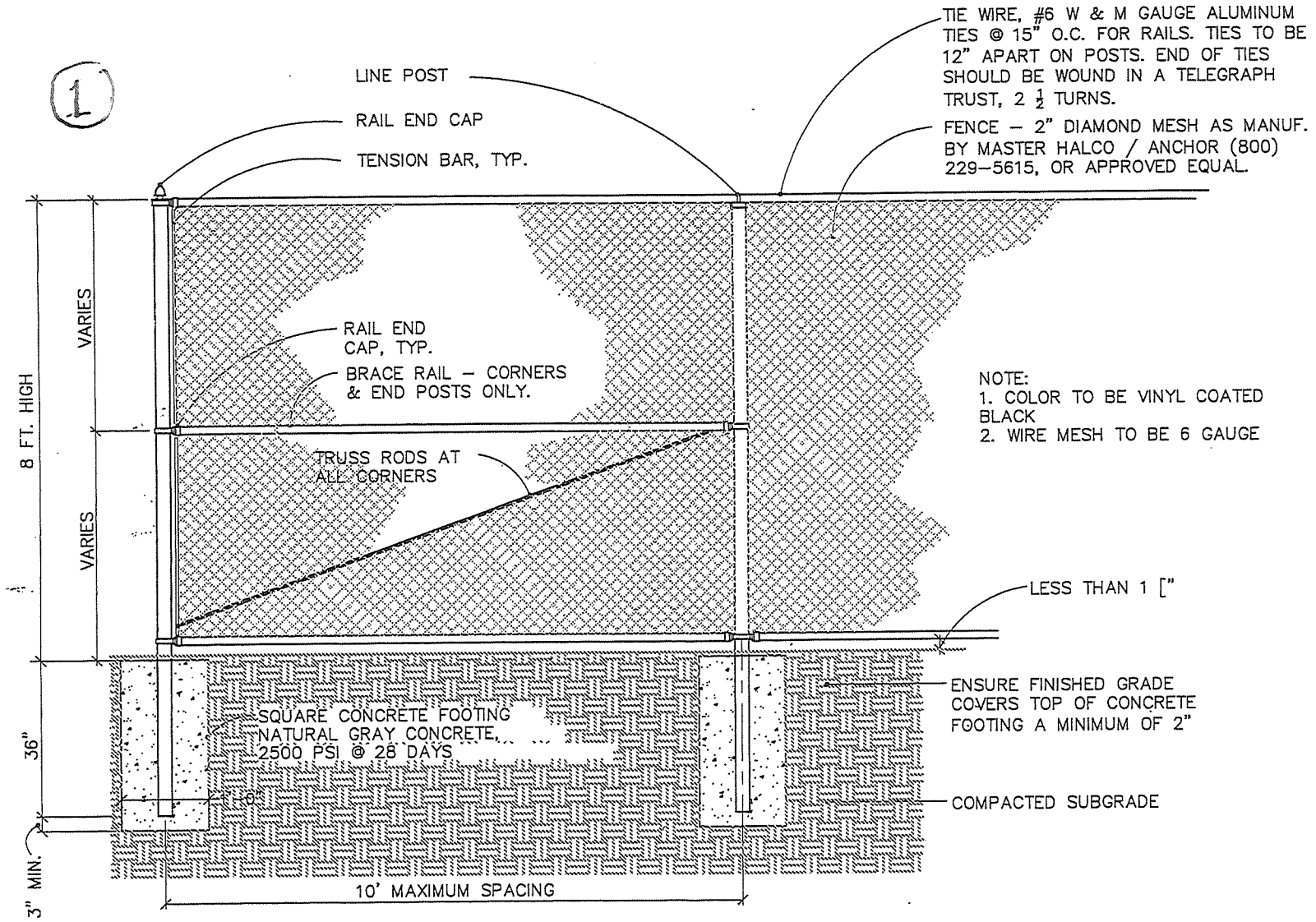

CHAIN LINK FENCE DETAIL

2 CORNER FITTING

SCALE: HALF SCALE

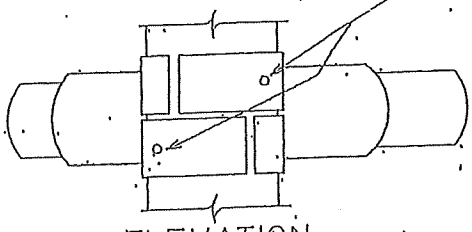

#14 STAINLESS STEEL DRIVE SCREWS

NOTE: EACH CORNER FITTING TO BE ATTACHED TO CORNER POST WITH TWO STAINLESS STEEL DRIVE SCREWS. (ONE DRIVE SCREW FOR EACH HALF OF CORNER FITTING)

ELEVATION

SPLIT FITTINGS - 3/16" MINIMUM THICKNESS

CORNER FITTINGS CAN BE SET AT ANY ANGLE.

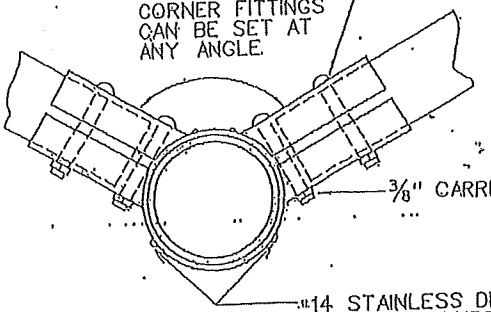

3/8" CARRIAGE BOLT

#14 STAINLESS DRIVE SCREWS ON BOTH HALVES OF SPLIT FITTING

PLAN

3 BOULEVARD
SCALE: HALF SCALE

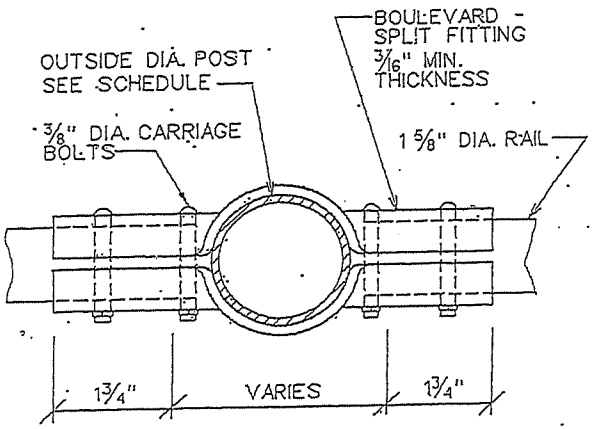

PLAN

ALL CORNERS TO BE ROUNDED

NOTE:

A=1 3/4" FOR 2" - 4 1/2" O.D. POST

B=1 5/8" FOR 2" O.D. OR SMALLER POST

C=2 1/2" NOM. O.D. OR LARGER - 2 BOLTS REQUIRED

4 END FITTING
SCALE: HALF SCALE

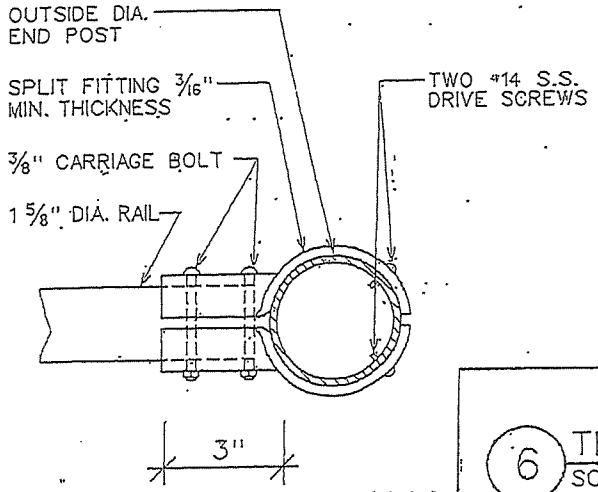

PLAN

NOTE: MINIMUM WIDTH OF END FITTING TO BE 2 1/4"

5 TOP RAIL COUPLING
SCALE: HALF SCALE

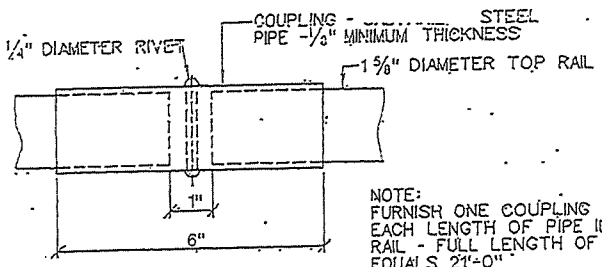

ELEVATION

NOTE:
FURNISH ONE COUPLING FOR EACH LENGTH OF PIPE IN TOP RAIL - FULL LENGTH OF PIPE EQUALS 21'-0"

6 TENSION MEMBERS
SCALE: HALF SCALE

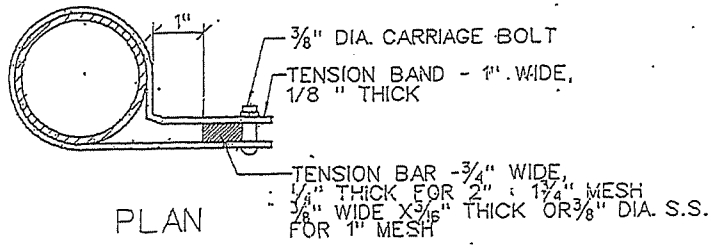

PLAN

7 CORNER SPLIT FITTING
SCALE: 3"=1'-0"

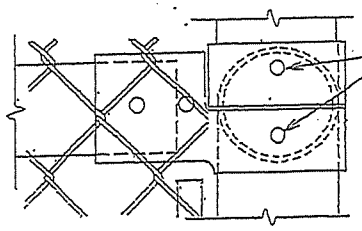

ELEVATION

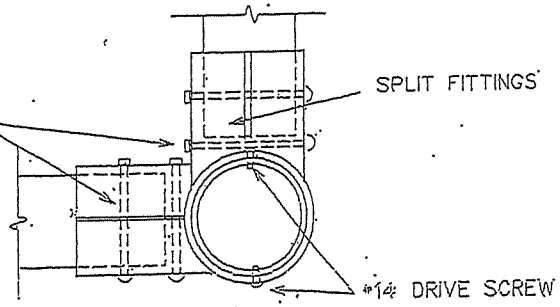

PLAN

8 SMALL POST CAP

SCALE: FULL SCALE

WALL THICKNESS 3/16" THROUGHOUT

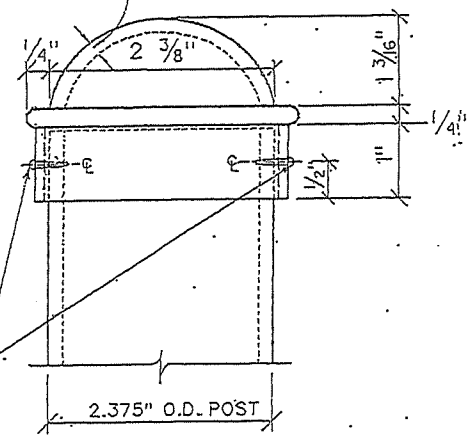

NOTE: POST CAP IS TO BE OF MALLEABLE IRON OR PRESSED STEEL.

CAP TOP FOR 3'-6" AND 4'-0" HIGH FENCE TO BE A SMOOTH "DOME" SHAPE. FOR 6'-0" HIGH FENCES, POST CAPS CAN BE "DOME" OR "BULLET" SHAPED.

POST CAP IS TO FIT SNUGLY OVER POST AND IS TO BE FIXED IN PLACE WITH TWO # 14 STAINLESS STEEL DRIVE OR SET SCREWS.

9 END, CORNER, & GATE POST CAP

SCALE: FULL SCALE

WALL THICKNESS 3/16" THROUGHOUT

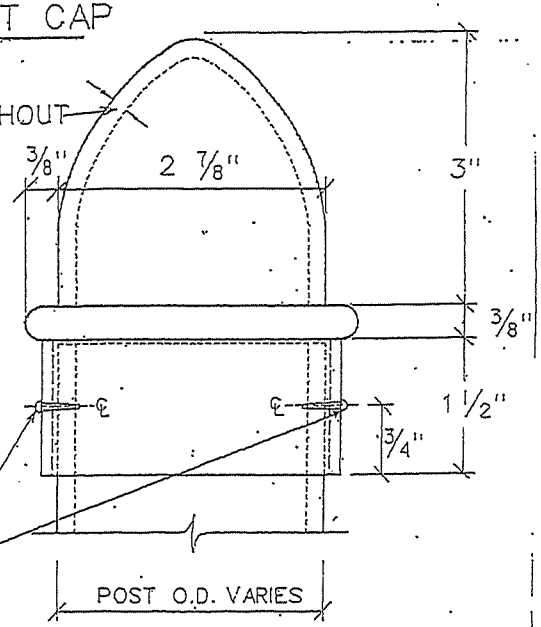

NOTE: POST CAP IS TO BE OF MALLEABLE IRON.

FOR 4" OUTSIDE DIAMETER POST, POST CAP SHALL POSSESS DIMENSIONS THAT ARE IN PROPORTION TO DIMENSIONS BELOW FOR 2 1/8" OUTSIDE DIAMETER POST CAP.

CAP TOPS FOR 3" OUTSIDE DIA. AND 4" OUTSIDE DIA. POSTS ARE TO POSSESS A SMOOTH "BULLET" SHAPE. FOR 2 1/2" OUTSIDE DIA. POST CAP - SEE DETAIL 9

POST CAP IS TO FIT SNUGLY OVER POST AND IS TO BE FIXED IN PLACE WITH TWO # 14 STAINLESS STEEL DRIVE OR SET SCREWS.

10 POST LINE TOP

SCALE: FULL SCALE

NOTE: WIDTH OF LINE TOP OVAL TO BE MINIMUM OF 5/8" AND A MAXIMUM OF 7/8". LINE TOP IS TO BE OF MALLEABLE IRON.

INSIDE OF LINE TOP OVAL IS TO BE ALIGNED WITH OUTSIDE 'WALL' OF LINE POST. CHAIN LINK MESH MUST BE STRAIGHT FROM LINE POST TO TOP RAIL.

WALL THICKNESS TO BE 3/16" THROUGHOUT

1 5/8" DIA. TOP RAIL

POST CAP IS TO FIT SNUGLY OVER POST AND IS TO BE FIXED IN PLACE WITH TWO # 14 STAINLESS STEEL DRIVE OR SET SCREWS.

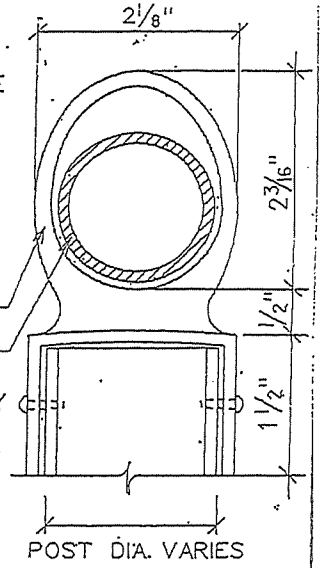

FABRIC WIDTHS

HEIGHT OF FENCE	WIDTH OF BOTTOM FABRIC	WIDTH OF TOP FABRIC
3'-6" - 4'-0"	3'-6" - 4'-0"	0
6'-0"	6'-0"	0
8'-0"	8'-0"	0
10'-0"	10'-0"	0
11'-0"	8'-0"	4'-0"
14'-0"	10'-0"	4'-0"
16'-0"	10'-0"	6'-0"
18'-0"	10'-0"	8'-0"
20'-0"	10'-0"	10'-0"

PIPE SCHEDULE

NOMINAL OUTSIDE DIAMETER	ACTUAL OUTSIDE DIAMETER
1⅝"	1.660
2"	2.375
2½"	2.875
3"	3.500
3½"	4.000
4"	4.500
4½"	5.000

BOLT AND FABRIC NOTES

PEEN END OF ALL BOLTS.

BOLTS WHICH ARE INSTALLED 6' OR LESS ABOVE GRADE SHALL NOT PROTUDE MORE THAN 1/4" BEYOND THE NUT AFTER TIGHTENING. ALL ROUGH EDGES SHALL BE FILED SMOOTH TO THE SATISFACTION OF THE ENGINEER.

ON FENCES OVER 12 FEET HIGH WHERE THE TWO WIDTHS OF FABRIC ARE REQUIRED, THE BOTTOM PIECE SHALL BE KNUCKLED TOP AND BOTTOM AND THE TOP PIECE KNUCKLED AT BOTTOM AND BARBED AT TOP.

THE TWO PIECES SHALL BE SPLICED IN SUCH A WAY AS TO GIVE A FINISHED NEAT APPEARANCE.

FABRIC TO BE KNUCKLED AT TOP AND BOTTOM RAILS ON FENCES UP TO AND INCLUDING 6'-0" HIGH AND BARBED AT TOP RAIL ON FENCES OVER 6'-0" HIGH.

SCHEDULE OF SIZES OF MEMBERS - AS PER ASTM A 53, ALL SIZES NPS

HEIGHT OF FENCE	DIAMETER OF LINE POSTS	POST SPACING MAXIMUM	CORNER & END POST	TOP RAIL	MID RAILS	BOTTOM RAIL	DEPTH OF POST INTO CURB AND FTG AT:		HORIZONTAL BRACES AT CORNER & END POST	DIAGONAL BRACES
							LINE POST	END/CORNER/ GATE POST		
3'-6" & 4'-0"	2"	6'-0"	2½"	1⅝"	0	1⅝"	1'-0"	1'-0"	0	0
6'-0"	2"	6'-0"	2½"	1⅝"	0	1⅝"	1'-8"	1'-8"	0	½" DIA.
8'-0"	2½"	8'-0"	3"	1⅝"	0	1⅝"	1'-8"	1'-8"	1 AT 1⅝"	½" DIA.
10'-0"	3"	10'-0"	4"	1⅝"	1 - 1⅝"	1⅝"	3'-2"	3'-2"	2 AT 1⅝"	½" DIA.
11'-0"	3"	10'-0"	4"	1⅝"	1 - 1⅝"	1⅝"	3'-2"	4'-2"	2 AT 1⅝"	½" DIA.
14'-0"	3½"	10'-0"	4"	1⅝"	2 - 1⅝"	1⅝"	3'-2"	4'-2"	2 AT 1⅝"	½" DIA.
16'-0"	3½"	10'-0"	4"	1⅝"	2 - 1⅝"	1⅝"	3'-2"	4'-2"	2 AT 1⅝"	½" DIA.
18'-0"	3½"	10'-0"	4"	1⅝"	2 - 1⅝"	1⅝"	3'-2"	4'-2"	2 AT 1⅝"	½" DIA.
20'-0"	4½"	10'-0"	4½"	1⅝"	3 - 1⅝"	1⅝"	4'-2"	4'-6"	3 AT 1⅝"	½" DIA.

LAKE COUNTY
FLORIDA

OFFICE OF PROCUREMENT SERVICES
315 WEST MAIN STREET, SUITE 441
PO BOX 7800
TAVARES FL 32778-7800

PHONE: (352) 343-9839
FAX: 352) 343-9473

ADDENDUM NO. 1

Date: June 17, 2015

ITB No. 15-0442

ITB Title: Fencing at South Lake Regional Park

It is the vendor's responsibility to ensure their receipt of all addenda, and to clearly acknowledge all addenda within their initial bid or proposal response. Acknowledgement may be confirmed either by inclusion of a signed copy of this addendum with the initial bid or proposal response, or by completion and return of the addendum acknowledgement section of the solicitation. Failure to acknowledge each addendum may prevent the bid or proposal from being considered for award.

This addendum does not change the date for receipt of bids or proposals.

The purpose of this addendum is to respond to the following question:

Question 1: The ITB specifications call for posts at 8' on centers. The detail drawings show 10' on center. Please clarify.

Answer 1: The posts are to be 8' on centers. Please make necessary changes.

Firm Name: HERCULES FENCE COMPANY Date: 7-7-15

Signature: [illegible] Title: PROJECT MANAGER

Typed/Printed Name: RUSTY BUCHKOVICH

LAKE COUNTY
FLORIDA

OFFICE OF PROCUREMENT SERVICES
315 WEST MAIN STREET, SUITE 441
PO BOX 7800
TAVARES FL 32778-7800

PHONE: (352) 343-9839
FAX: 352) 343-9473

ADDENDUM NO. 2

Date: June 18, 2015
ITB No. 15-0442
ITB Title: Fencing at South Lake Regional Park

It is the vendor's responsibility to ensure their receipt of all addenda, and to clearly acknowledge all addenda within their initial bid or proposal response. Acknowledgement may be confirmed either by inclusion of a signed copy of this addendum with the initial bid or proposal response, or by completion and return of the addendum acknowledgement section of the solicitation. Failure to acknowledge each addendum may prevent the bid or proposal from being considered for award.

The purpose of this addendum is to respond to the following question:
Question 1: The specifications say to match existing fence so I can look, but the specs call for what says 1 5/8" top, middle and bottom post. I assume this means 1 5/8" top, middle and bottom rail?
Answer 1: Correct.

Question 2: Will C-Post line posts and rail which are stronger than Sch 40 pipe and provide much better corrosion protection be an option for the fence framework on this project? It is all domestic made while most of the Sch 40 pipe is not.
Answer 2: To stay consistent throughout all parks please bid as stated in the specifications which are outlined in the ITB and in Addendum 1.

Question 3: It says that the site visit is mandatory but does not have a meeting date. Do we schedule that with you or just go out and take a look when I can?
Answer 3: If is the vendors responsibility to visit the site of the proposed work, and acknowledge that they have visited the site in Section 4, Certification of Mandatory Site Exam.

Question 4: Page 21 of the bid package states that the map, gate sample, specs, etc. are attached. I don't see any attachments. Where can I locate these?
Answer 4: To see all bidding documents please click on the link below, then scroll down.
http://www.lakecountyfl.gov/departments/fiscal_and_administrative_services/procurement_services/bid_details.aspx?bid_number=15-0442

Firm Name: HERCULES FENCE COMPANY Date: 7-7-15
Signature: [illegible] Title: PROJECT MANAGER
Typed/Printed Name: RUSTY BUCHKOVICH