ADDENDUM TO AGREEMENT

BETWEEN

LAKE COUNTY, FLORIDA AND

RUBY BUILDERS, INC.

FOR ADDITIONAL SERVICES RELATING TO

DOOR INSPECTION AND MAINTENANCE

RFP #16-0434

This is an Addendum to the Agreement between Lake County, Florida, a political subdivision of the State of Florida, hereinafter referred to as "COUNTY," by and through its Board of County Commissioners, and Ruby Builders, Inc., a Florida corporation, its successors and assigns, hereinafter referred to as "CONTRACTOR."

WHEREAS, COUNTY and CONTRACTOR entered into an Agreement dated September 27, 2016, for provision of inventory inspections, testing, maintenance, and repairs to COUNTY facilities doors, hereinafter referred to as "Agreement;" and

WHEREAS, Section 7.11 of the Agreement permits the CONTRACTOR to perform additional services for the COUNTY not specifically enumerated in the Agreement upon execution of a written amendment to the Agreement; and

WHEREAS, the COUNTY requires additional services relating to inventory inspections, testing, maintenance, and repairs to COUNTY facilities doors; and

WHEREAS, the CONTRACTOR desires to perform such services subject to the terms of the Agreement and this Amendment; and

WHEREAS, the provision of such services wil benefit the parties and the residents of Lake County, Florida.

NOW, THEREFORE, IN CONSIDERATION of the mutual terms, understandings, conditions, promises, covenants and payment hereinafter set forth, and intending to be legally bound the parties, hereby agree as follows:

Article 1. Recitals

1.1 The foregoing recitals are true and correct and incorporated herein.

Article 2. Purpose; Term

2.1 The purpose of this Addendum is to retain additional services of the CONTRACTOR relating to inventory inspections, testing, maintenance, and repairs to COUNTY facilities doors.

2.2 This Addendum shall be effective immediately following the date of execution by the COUNTY and remain in effect until termination as set forth herein.

Article 3. Scope of Professional Services

3.1 The CONTRACTOR shall provide all labor, materials, and equipment to complete the service in accordance with the Additional Scope of Services, attached hereto and incorporated herein as **Attachment A**, in addition to those services stated in the Agreement.

Article 4. Payment

4.1 Payment shall be made in accordance with the hourly rates and fees set forth in the Agreement, with the addition of any applicable fees set forth in Attachment A.

Article 5. Termination

5.1 This Addendum may be terminated by the COUNTY upon the same terms and conditions as set forth in the Agreement.

Article 6. Other Provisions

6.1 All other provisions of the Agreement not inconsistent with the terms and conditions of this Addendum shall remain in full force and effect during the term of this Addendum.

IN WITNESS WHEREOF, the parties hereto have made and executed this Agreement on the respective dates under each signature: COUNTY through its duly authorized representative and by CONTRACTOR through its duly authorized representative.

CONTRACTOR

Alec Jeffrey Suberman, President
Ruby Builders, Inc.
License #: CGC017011
This 13th day of December, 2016.

COUNTY

Barnett Schwartzman
Procurement Services Manager

This 15th day of December, 2016.

Approved as to form and legality:

Melanie Marsh
County Attorney

ATTACHMENT A: ADDITIONAL SCOPE OF SERVICES

RUBY
BUILDERS
INCORPORATED

Request for Change One

November 8, 2016

$4.00/door to add the following services

Add to the reported information:

1. Type of Hardware in lieu yes or no to closer
2. Entry or Exterior type door
3. Single or double door
4. Threshold issues (damaged or not/ type of damage)
5. Handicap operator
6. Type of lock
7. Type of door holder
8. Report if it has an alarm

1959 SILVER STAR ROAD
ORLANDO, FLORIDA 32505
PHONE (407) 293-8217
FAX (407) 293-8181
www.rubybuilders.com

AGREEMENT BETWEEN
LAKE COUNTY, FLORIDA AND
RUBY BUILDERS, INC.
FOR DOOR INSPECTION AND MAINTENANCE
RFP # 16-0434

This is an Agreement between Lake County, Florida, a political subdivision of the State of Florida, herein referred to as COUNTY, by and through its Board of County Commissioners, and Ruby Builders, Inc., a Florida corporation, its successors and assigns, herein referred to as CONTRACTOR.

WITNESSETH:

WHEREAS, the COUNTY publicly submitted a Request for Proposal (RFP) # 16-0434 seeking firms or individuals qualified to provide inventory inspections, testing, maintenance, and repairs to all Lake County doors; and

WHEREAS, CONTRACTOR desires to perform such services subject to the terms of this Agreement; and

WHEREAS, the provision of such services will benefit the parties and the residents of Lake County, Florida.

NOW, THEREFORE, IN CONSIDERATION of the mutual terms, understandings, conditions, promises, covenants and payment hereinafter set forth, and intending to be legally bound, the parties hereby agree as follows:

Article 1. Recitals

1.1 The foregoing recitals are true and correct and incorporated herein.

Article 2. Purpose

2.1 The purpose of this Agreement is for CONTRACTOR to provide inventory inspections, testing, maintenance, and repairs to all Lake County doors, hereinafter referred to as the "Service."

Article 3. Scope of Professional Services

3.1 On the terms and conditions set forth in this Agreement, COUNTY hereby engages CONTRACTOR to provide all labor, materials and equipment to complete the Service in accordance with the Scope of Services, attached hereto and incorporated herein as **Attachment A**, as modified or clarified by Addendum(s) #1 dated July 1, 2016, attached hereto and incorporated herein by reference as **Attachment B.** It is understood that the Scope of Services may be modified by change order as the Service progresses, but to be effective and binding, any such change order must be in writing, executed by the parties, and in accordance with the COUNTY's Purchasing Policies and Procedures. A copy of these policies and procedures shall be made available to the CONTRACTOR upon request.

3.2 The term of this Agreement shall be for a twelve (12) month term and that the CONTRACTOR shall complete the work as specified in the Scope of Services. The COUNTY has the option to renew this

Agreement for four (4) additional one (1) year period(s). The prices set forth in this Agreement shall prevail for the full duration of the initial contract term unless otherwise indicated elsewhere in this document. Prior to completion of each exercised contract term, the COUNTY may consider an adjustment to price based on changes in the following pricing index: CPI. It is the CONTRACTOR's responsibility to request any pricing adjustment in writing under this provision. The CONTRACTOR's written request for adjustment should be submitted thirty (30) calendar days prior to expiration of the then current contract term and clearly substantiate the requested increase. The written request for adjustment should not be in excess of the relevant pricing index change. If no adjustment request is received from the CONTRACTOR, the COUNTY will assume that the CONTRACTOR has agreed that the optional term may be exercised without pricing adjustment. Any adjustment request received after the commencement of a new option period shall not be considered. The COUNTY reserves the right to reject any written price adjustments submitted by the CONTRACTOR and/or to not exercise any otherwise available option period based on such price adjustments. Continuation of the contract beyond the initial period, and any option subsequently exercised, is a COUNTY's prerogative, and not a right of the CONTRACTOR. This prerogative will be exercised only when such continuation is clearly in the best interest of the COUNTY.

All work shall be performed in accordance with good commercial practice. The work schedule and completion dates shall be adhered to by the CONTRACTOR except in such cases where the completion date will be delayed due to acts of God, strikes, or other causes beyond the control of the CONTRACTOR. In these cases, the CONTRACTOR shall notify the COUNTY of the delays in advance of the original completion so that a revised delivery schedule can be appropriately considered by the COUNTY. No additional days shall be granted for rain delays.

3.3 The CONTRACTOR shall be solely responsible for obtaining all necessary approvals and permits to complete the Service.

3.4 The CONTRACTOR shall remain appropriately licensed and/or employ the services of a subcontractor who is appropriately licensed throughout the course of the Service. Failure to maintain all required licenses shall entitle the COUNTY, at its option, to terminate this Agreement.

3.5 Although this Agreement identifies specific facilities to be serviced, it is hereby agreed and understood that any County department or agency facility may be added to this Agreement at the option of the County. When required by the pricing structure of the Agreement, the CONTRACTOR shall be invited to submit price quotes for these additional facilities. The additional site(s) shall be added to this Agreement by formal modification. The COUNTY may obtain price quotes for the additional facilities from other vendors in the event that fair and reasonable pricing is not obtained from the CONTRACTOR or for other reasons at the County's discretion. Although this Agreement identifies specific facilities to be serviced, it is hereby agreed and understood that any County department or agency may delete service for any facility when such service is no longer required, upon fourteen (14) calendar days written notice.

3.6 The CONTRACTOR acknowledges that it has sufficient understanding of the nature and location of the work; the general and local conditions, including but not limited to, those bearing upon transportation, disposal, handling and storage of materials; availability of labor, water, electric power, and roads; and uncertainties of weather or similar physical conditions at the site; the character of equipment and facilities needed preliminary to and during the completion of the Service. The CONTRACTOR further acknowledges that the CONTRACTOR has satisfied itself as to the character, quality and quantity of surface and subsurface materials, obstacles or conditions of the site. Any failure by the CONTRACTOR to acquaint itself with any aspect of the work or with any of the applicable conditions shall not relieve the CONTRACTOR from responsibility for adequately evaluating the difficulty or cost of successfully performing the work required, nor shall it be considered a basis for any claim for additional time or

compensation. The COUNTY assumes no responsibility for any conclusions or interpretations made by the CONTRACTOR on the basis of the information made available by the COUNTY. The COUNTY also assumes no responsibility for any understanding or representations made by its officers or agents during or prior to the execution of this contract, unless such understanding or interpretations are made in writing and incorporated herein by reference.

3.7 If required, the Contractors shall attend a mandatory pre-bid meeting. Whether or not there is a mandatory or non-mandatory pre-bid, the contractor shall be required to carefully examine any supplied drawings and/or specifications and be thoroughly aware regarding any and all conditions that may in any manner affect the work to be performed under the contract. If a pre-bid meeting is not required the Contractor shall visit the site to familiarize themselves with the Service, see existing conditions, and take measurements. No additional allowances will be made for lack of knowledge of these conditions.

3.8 In the event of any conflict between the drawings and specifications contained within this Agreement, the following shall govern:

A. Addenda shall supersede all other contract documents to the extent specified in the addenda. Subsequent addenda shall supersede prior addenda only to the extent specified therein.

B. Drawings and specifications are intended to agree and be mutually complete. Any item not contained within the drawings, but contained in the specifications, or vice-versa, shall be provided and/or executed as shown in either the drawing or specification at no extra costs to the COUNTY. Should anything not included in either the drawing and/or the specifications be necessary for the proper construction and/or operation of the Service as herein specified, or should any error or disagreement between the specifications and drawings exist or appear to exist, the CONTRACTOR shall not derive unjust benefit thereby, or use such disagreement counter to the best interests of the COUNTY. The CONTRACTOR shall immediately notify the COUNTY's Project Manager of any discrepancy and await the Project Manager's direction before proceeding with the work in question.

3.9 CONTRACTOR acknowledges and agrees that CONTRACTOR shall utilize the U.S. Department of Homeland Security's E-Verify system in accordance with the terms governing use of the system to confirm the employment eligibility of:

A. All persons employed by the CONTRACTOR during the term of this Agreement to perform employment duties within Lake County; and

B. All persons, including subcontractors, assigned by the CONTRACTOR to perform work pursuant to the contract.

3.10 CONTRACTOR acknowledges and agrees that, in accordance with Section 255.099, Florida Statutes, if the Service assigned to CONTRACTOR is being supported in whole or in part by State funding the CONTRACTOR shall give preference to the employment of state residents in the performance of the work on the Service if state residents have substantially equal qualifications to those of non-residents. If the CONTRACTOR is required to employ state residents, the CONTRACTOR shall contact the Department of Economic Opportunity to post the employment needs in the State's job bank system. However, in work involving the expenditure of federal aid funds, this section may not be enforced in such a manner as to conflict with or be contrary to federal law prescribing a labor preference to honorably discharged soldiers, sailors, or marines, or prohibiting as unlawful any other preference or discrimination among the citizens of the United States.

Article 4. Payment

4.1 The COUNTY shall pay and CONTRACTOR shall accept, as full and complete payment for the timely and complete performance of its obligations hereunder as provided in the Pricing Schedule which is attached as **Attachment C** to this Agreement and which is made a part of this Agreement by reference.

A fixed lump sum price represents the CONTRACTOR's base bid plus the optional portion of the Service, including all applicable taxes, materials, labor, supervision, fuel, permits, licenses, management and overhead, unless a duly authorized change order has been issued in accordance with the COUNTY's purchasing policies and procedures.

Any hourly rate quoted shall be deemed to provide full compensation to the CONTRACTOR for labor, supervision, equipment use, travel time, and all other costs associated with providing the services needed to satisfactorily complete all work provided. This rate is assumed to be at straight-time for all labor, except as otherwise noted.

4.2 CONTRACTOR shall submit progress invoice no later than the tenth (10th) of each month to Facilities and Fleet Management Department, 32400 C.R. 473, Leesburg, Florida 34788. All invoices shall contain the bid number, date and location of delivery or service, purchase order number, confirmation of acceptance of the goods or services by the appropriate COUNTY representative, and a detailed description of services provided. If parts/materials are used as part of the Service, the invoice shall be accompanied with a copy of the invoice to the Contractor from their supplier. A service ticket shall be included showing the name of the technician(s), the date the work was completed, the start and completion time of the service, the service rendered, the parts/materials (if any) installed. The Contractor shall also submit with their invoice a completed "Certification of Payment to Subcontractors and Suppliers" form. Failure to submit invoices in the prescribed manner will delay payment, and the CONTRACTOR may be considered in default of contract and its contract may be terminated. Final invoices shall include an original, completed "Certification of Payment to Subcontractors and Suppliers" form, if applicable.

The Contractor may receive periodic payments on a thirty (30) day interval for Service tasks completed during that period by the Contractor and approved by the COUNTY's Project Manager. Retention of funds shall be held in accordance with Florida Prompt Payment Act. In order for the County to provide payment, the Contractor shall submit a fully documented invoice that provides the basic information set forth below.

4.3 The COUNTY shall make payment on all undisputed invoices in accordance with the Florida Prompt Payment Act, Part VII, Chapter 218, Florida Statutes. The COUNTY shall not make payment on partial delivery of supplies, services, or materials.

4.4 In the event any part of this Agreement or the Service, is to be funded by federal, state, or other local agency monies, the CONTRACTOR hereby agrees to cooperate with the COUNTY in order to assure compliance with all requirements of the funding entity applicable to the use of the monies, including providing access to and the right to examine relevant documents related to the Service and as specifically required by the Federal or state granting agency, and receiving no payment until all required forms are completed and submitted. A copy of the requirements shall be supplied to the CONTRACTOR by the COUNTY upon request.

Article 5. County Responsibilities

5.1 COUNTY shall designate a County staff member to act as COUNTY's Project Manager. It is agreed to by the parties that the COUNTY's Project Manager will decide all questions, difficulties, or

disputes, of whatever nature, which may arise relative to the interpretation of the plans, construction, prosecution and fulfillment of the Scope of Services, and as to the character, quality, amount and value of any work done, and materials furnished, under or by reason of this Agreement. The COUNTY's Project Manager may appoint representatives as desired that will be authorized to inspect all work done and all materials furnished.

5.2 COUNTY shall pay in accordance with the provisions set forth in this Agreement.

5.3 COUNTY retains the right to inspect all work to verify compliance with the contract documents. Such inspection may extend to all or any part of the work and to the manufacture, preparation or fabrication of the materials to be used.

Article 6. Construction Provisions

6.1 Intent of the Contract Documents.

A. For purposes of this Agreement, the term "contract documents" includes all bid documents, drawings, the Statement of Work, attachments to this Agreement, and provisions within this Agreement, along with any change orders or amendments to this Agreement.

B. It is the intent of the contract documents to describe a functionally complete Service which defines the scope of work. Any work, materials, or equipment that may reasonably be inferred from the contract documents as being required to produce the intended result shall be supplied whether or not specifically called for. When words which have a well-known technical or trade meaning are used to describe work, material or equipment, such words shall be interpreted in accordance with that meaning. Reference to standard specifications, manuals or codes of any technical society, organization or association or to the laws or regulations of any governmental authority having jurisdiction over the Service, whether such reference be specified or by implication, shall mean the latest standard specification, manual, code, law or regulation in effect at the time the work performed, unless specifically stated otherwise herein.

C. The contract documents and all referenced standards cited therein are essential parts of the contract requirements. A requirement occurring in one is binding as though occurring in all.

6.2 Errors and Omissions. The CONTRACTOR shall not take advantage of any apparent error or omission in the contract documents. If any error or omission appears in the contract documents, the CONTRACTOR shall immediately notify the COUNTY in writing of such errors or omissions. In the event the CONTRACTOR knows or should have known of any error or omission and failed to provide such notification, the CONTRACTOR shall be deemed to have waived any claim for increased time or compensation the CONTRACTOR may have had and the CONTRACTOR shall be responsible for the results and the costs of rectifying any such error or omission.

6.3 Contractor Personnel.

A. The CONTRACTOR shall assure that all personnel are competent, careful and reliable. All personnel must have sufficient skill and experience to perform their assigned task properly and satisfactorily and to operate any equipment involved, and shall make due and proper effort to execute the work in the manner prescribed in the contract documents.

B. When the COUNTY determines that any person is incompetent, unfaithful, intemperate, disorderly or insubordinate, such person shall be immediately discharged from the Service and shall not

again be employed on the Service without the written consent of the COUNTY. Should the CONTRACTOR fail to remove such person or persons, the COUNTY may withhold all payments which are or may become due, or may suspend the work with approval of the COUNTY until such orders are complied with.

C. The CONTRACTOR shall at all times have at the Service as its agent a competent superintendent capable and thoroughly experienced in the type of work being performed, who shall receive instructions from the COUNTY. The superintendent shall supervise all trades, direct all Service activities, establish and maintain installation schedules, and provide the COUNTY's Project Manager with progress reports as requested. The superintendent shall have full authority to execute the orders or directions of the COUNTY, and if applicable to supply promptly any materials, tools, equipment, labor and incidentals which may be required. Such superintendent shall be furnished regardless of the amount of work sublet. The CONTRACTOR's superintendent shall speak, write, and understand English and shall be on the job site during all working hours.

D. No alcoholic beverages or drugs are permitted on any COUNTY properties. Evidence of alcoholic beverages or drug use by an individual will result in immediate termination from the job site.

E. The CONTRACTOR shall maintain a dress code for their employee's with a minimum of shirts, pants, and work shoes/boots, in decent condition, at all times while the work is being performed. Additionally, there may be times in which the COUNTY will require all workers on a particular individual Service to wear ID badges. The COUNTY shall supply the ID badges. If ID badges are necessary, the CONTRACTOR will ensure that all workers employed for that particular Service, whether employed by the CONTRACTOR or a subcontractor, are scheduled, prior to assignment, for an appointment during the COUNTY's normal working hours with the COUNTY's Project Manager, to process and receive ID badges. All new workers must be assigned an ID badge prior to starting work for that Service. The CONTRACTOR shall be aware that it may take up to one (1) week to receive ID badges after required information has been received and pictures have been taken.

F. If required by the COUNTY for the Service, the CONTRACTOR shall provide the COUNTY with a complete list of personnel, subcontractors, and representatives of the CONTRACTOR that shall be utilized for the Service. The list shall include a full name, address, telephone number, copy of social security card, and a copy of driver's license/State of Florida identification card/valid passport/valid work visa. Background checks may be performed by the Lake County Sheriff's Office at no expense to the CONTRACTOR, on a Task by Task basis. At no time shall any person associated with the CONTRACTOR be granted access to perform work on COUNTY property prior to a completed background check. All decisions related to the approval of background checks shall be made by the Lake County Sheriff's Office. All decisions are final. The CONTRACTOR must remove any employee, with access to COUNTY facilities, from COUNTY service who is convicted of a felony crime during the time this Agreement is in effect. Failure of the CONTRACTOR to obtain background checks if specified may result in termination of this Agreement. The COUNTY reserves the right to require immediate removal of any employee from COUNTY property it deems unfit for service for any reason. This right is non-negotiable and the CONTRACTOR agrees to this condition by accepting this Agreement. The CONTRACTOR shall have enough qualified people with current background checks so as to be able to provide a replacement within twenty-four (24) hours.

6.4 Subcontractors.

A. Within five (5) calendar days after the award of any subcontract, the CONTRACTOR shall deliver to the COUNTY a statement setting forth the name and address of the subcontractor, a summary description of the work subcontracted and a copy of the subcontract.

B. The CONTRACTOR shall be fully responsible to the COUNTY for the acts and omissions of the CONTRACTOR's subcontractors and of persons either directly or indirectly employed by them.

C. All subcontractors, for as long as the subcontractor is working on the job site, shall have at least one supervisor/foreman on the job site that shall speak and understand English.

D. The CONTRACTOR shall cause its subcontractors and suppliers to comply with the Service schedule and applicable sub-schedules.

E. Releases of liens from subcontractors shall be required before final payment will be released.

6.5 Completion of the Scope of Services. The CONTRACTOR shall give the work the attention necessary to assure the scheduled progress and shall cooperate fully with the COUNTY and with other contractors on the job site. All work shall be done in accordance with the contract documents. When not specifically identified in the technical specifications, such materials and equipment shall be of a suitable type and grade for the purpose. All material, workmanship, and equipment shall be subject to the inspection and approval of the COUNTY.

6.6 Safety.

A. The CONTRACTOR shall be responsible for initiating, maintaining and supervising all safety precautions and programs in connection with the work and for complying with all requirements of the Occupational Safety and Health Administration (OSHA) and any other industry, federal, state or local government standards, including the National Institute of Occupational Safety Hazards (NIOSH), and the National Fire Protection Association (NFPA). The CONTRACTOR shall take all necessary precautions for the safety of, and shall provide the necessary protection to prevent damage, injury or loss to persons or property. The CONTRACTOR shall be aware that while working for the COUNTY, representatives from agencies such as OSHA are invitees and need not have warrants or permission to enter the work site. Any fines levied by the above-mentioned authorities for failure to comply with these requirements shall be borne solely by the CONTRACTOR.

B. CONTRACTOR certifies that all material, equipment, etc. to be used in an individual Service meets all Occupational Safety and Health Administration (OSHA) requirements. The CONTRACTOR further certifies that if any of the material, equipment, etc. is found to be deficient in any OSHA requirement in effect on the date of delivery, all costs necessary to bring the material, equipment, etc. into compliance with the aforementioned requirements shall be borne by the CONTRACTOR. All standard equipment, work operations, safety equipment, personal protective equipment, and lighting required or mandated by State, Federal, OSHA, or Americans with Disabilities Act (ADA) regulations must be provided and used by the CONTRACTOR and its employees

C. All safety devices installed by the manufacturer on equipment utilized by the CONTRACTOR on the jobsite shall be in place and in proper working order at all times. If the COUNTY determines that the equipment is deficient in safety devices, the CONTRACTOR shall be notified

immediately. The CONTRACTOR shall immediately repair, or remove the equipment from service until the deficiency is corrected to the satisfaction of the COUNTY.

D. The COUNTY may periodically monitor the work site for safety. Should there be safety and/or health violations, the COUNTY shall have the authority, but not the duty, to require the CONTRACTOR to correct the violation in an expeditious manner. If there is any situation that is deemed unsafe by the COUNTY, the Service will be shut down immediately upon notice and will not resume work until the unsafe condition has been remedied.

E. Should the work site be in a hazardous area, the COUNTY shall take reasonable actions to furnish the CONTRACTOR with information concerning hazards such as the types or the identification of known toxic material, machine hazards, Material Safety Data Sheets, or any other information that would assist the CONTRACTOR in the planning of a safe work site. The CONTRACTOR retains the ultimate responsibility to ensure all work is performed in a manner consistent with all applicable safety standards and directives.

F. The CONTRACTOR shall erect and maintain, as required by existing conditions and contract performance, safeguards for safety and protection such as barricades, danger signs, a construction fence, and other warnings against hazardous conditions.

G. The CONTRACTOR shall be responsible for the removal of all surplus material and debris from the Service site at the end of each work day. All costs associated with clean-up and debris removal shall be included in the lump sum price stated elsewhere herein. The Contractor shall leave the site clean and neat. All work must be cleaned up prior to the next day of business. At no time shall the specified work interfere with the regular operating hours of Lake County. The Contractor must have ample cleaning supplies and a minimum of two (2) vacuum cleaners on-site for clean-up. At no time shall the COUNTRACTOR use COUNTY cleaning supplies or equipment. Upon final completion, the CONTRACTOR shall thoroughly clean-up all areas where work has been involved as mutually agreed with the COUNTY's Project Manager. **PLEASE NOTE: If at any time the CONTRACTOR fails to clean up the work area to acceptable levels the COUNTY shall retain outside cleaning services and the actual costs for this service shall be deducted from the CONTRACTOR's final payment with the minimum cost of $50.00 to offset COUNTY time for securing services to properly clean and inspect the site.**

H. CONTRACTOR shall confine all equipment, materials and operations to the Service site and areas identified in the Contract documents. CONTRACTOR shall assume all responsibility for any damage to any such area resulting from the performance of the work.

I. CONTRACTOR is responsible for notifying the COUNTY of any hazardous materials used on the work site and providing the COUNTY a copy of the Material Safety Data Sheets (MSDS). Any spillage of hazardous chemicals and/or wastes by the CONTRACTOR shall be reported immediately to the COUNTY and cleaned up in accordance with all State and Federal Regulations. The cost of cleanup of any spillage of hazardous chemicals and/or wastes caused by the CONTRACTOR shall be the sole responsibility of the CONTRACTOR and the COUNTY shall share no responsibility of these costs. A copy of the complete report showing compliance with local, state, and federal agencies shall be given to the COUNTY. If any hazardous chemicals or conditions are discovered during the normal operation, it is the responsibility of the CONTRACTOR to immediately contact the COUNTY with a description and location of the condition. The MSDS shall include the following information:

1. The chemical name and the common name of the toxic substance

2. The hazards or other risks in the use of the toxic substance, including the potential for fire, explosion, corrosiveness, and reactivity.
3. The known acute and chronic health effects of risks from exposure, including the medical conditions which are generally recognized as being aggravated by the exposure to the toxic substances.
4. The primary route of entry and symptoms of exposure.
5. The proper precautions, handling practices, necessary personal protective equipment, and other safety precautions in the use of or exposure to the toxic substances, including appropriate emergency treatment in case of overexposure;
6. The emergency procedure for spills, fire, disposal and first aid.
7. A description in lay terms of the known specified potential health risks posed by the toxic substance intended to alert any person reading this information.
8. The year and month, if available, that the information was compiled, and the name, address and emergency telephone number of the manufacturer responsible for preparing the information.

J. The CONTRACTOR shall designate a competent person of its organization whose duty shall be the prevention of accidents. This person shall be literate and able to communicate fully in the English language because of the necessity to read job instructions and signs, as well as the need for conversing with management personnel. This person shall be the CONTRACTOR's Superintendent unless otherwise designated in writing to the COUNTY's Project Manager. All communications to the Superintendent shall be as binding as if given to the CONTRACTOR.

6.7 Time for Completion and Extensions.

A. Purchase orders shall be issued for Services to the Contractor. Issuance of a purchase order is not a directive to begin work unless otherwise specified. A written notice to proceed is required for the Contractor to schedule or begin work. Email notice is acceptable.

B. The CONTRACTOR shall diligently pursue the completion of the work and coordinate the work being done on the Service by its subcontractors and material suppliers, as well as coordinate the CONTRACTOR's work with the work of other contractors so that the CONTRACTOR's work or the work of others shall not be delayed or impaired. The CONTRACTOR shall be solely responsible for all construction means, methods, techniques, sequences and procedures, as well as coordination of all portions of the work under the contract documents. The time for completion requirements are contained in Article 3.2 above.

C. Should the CONTRACTOR be obstructed or delayed in the completion of the work as a result of unforeseeable causes beyond the control of the CONTRACTOR, and not due to the CONTRACTOR's fault or neglect, the CONTRACTOR shall notify the COUNTY in writing within twenty-four (24) hours after the commencement of such delay, stating the cause or causes thereof, or be deemed to have waived any right which the CONTRACTOR may have had to request a time extension.

D. If the CONTRACTOR complies with the twenty-four (24) hour notice requirement, the COUNTY shall ascertain the facts and the extent of the delay being claimed and recommend an extension to the contract time when, in the COUNTY's sole judgment, the findings of fact justify such an extension. The CONTRACTOR shall cooperate with the COUNTY's investigation of the delays by providing any schedules, correspondence or other data that may be required to complete the findings of fact. Extensions to the contract time may be granted only for those delays which impact the CONTRACTOR's construction

schedule. Extensions of contract time, if approved by the COUNTY, must be authorized by written change order.

6.8 Changes in the Scope of Services.

A. The COUNTY may at any time, by written change order, in accordance with the COUNTY's Purchasing Policy and Procedures, increase or decrease the scope of the work. For changes in work requested by CONTRACTOR, the CONTRACTOR shall prepare and submit change order requests for COUNTY approval. Each change order shall include time and monetary impacts of the change, whether the change order is considered alone or with all other changes during the course of the Service. Both the COUNTY and the CONTRACTOR shall execute the change order.

B. The value of such extra work or change shall be determined by the contract unit values, if applicable unit values are set forth in this Agreement. The amount of the change shall be computed from such values and added to or deducted from the contract price.

C. If the COUNTY and the CONTRACTOR are unable to agree on the change order for requested change, the CONTRACTOR shall, nevertheless, promptly perform the change as directed in writing by the COUNTY. If the CONTRACTOR disagrees with the COUNTY's adjustment determination, the CONTRACTOR must make a claim pursuant to the Claims and Disputes section herein, or else be deemed to have waived any claim on this matter the CONTRACTOR might have otherwise had.

D. For work not contemplated by the original Agreement, the amount of an increase shall be limited to the CONTRACTOR's reasonable direct labor and material costs and reasonable actual equipment costs as a result of the change (including allowance for labor burden costs) plus a maximum ten percent (10%) markup for all overhead and profit, unless otherwise agreed to in writing by the COUNTY. In such case, the CONTRACTOR shall keep and present to the COUNTY an itemized accounting together with appropriate supporting data. In the event such changed work is performed by a subcontractor, a maximum ten percent (10%) markup for all overhead and profit for all subcontractors' direct labor and material costs and actual equipment costs shall be permitted, with a maximum five percent (5%) markup thereon by the CONTRACTOR for all of its overhead and profit, for a total overall maximum markup of fifteen percent (15%) of the amount of changed work. All compensation due the CONTRACTOR and any subcontractor or sub-subcontractor for field and home office overhead is included in the markups listed above.

E. The COUNTY shall not be liable to the CONTRACTOR for any increased compensation in the absence of a written change order executed in accordance with COUNTY policy. The payment authorized by such a change order shall represent full and complete compensation to the CONTRACTOR for labor, materials, incidental expenses, overhead, profit, impact costs and time associated with the work authorized by such change order.

F. Execution by the CONTRACTOR of a properly authorized change order shall be considered a waiver of all claims or requests for additional time or compensation for any activities prior to the time of execution related to items included in the change order.

G. Upon receipt of an approved change order, changes in the Scope of Services shall be promptly performed. All changes in work shall be performed under the terms and conditions of this Agreement.

6.9 Claims and Disputes.

A. Claims by the CONTRACTOR shall be made in writing to the COUNTY within two (2) business days, unless another provision of this Agreement sets forth a different time frame, after the commencement of the event giving rise to such claim or the CONTRACTOR shall be deemed to have waived the claim. All claims shall be priced in accordance with the section in this document entitled "Changes in Work".

B. The CONTRACTOR shall proceed diligently with its performance as directed by the COUNTY, regardless of any pending claim, action, suit, or administrative proceeding, unless otherwise agreed to by the COUNTY in writing. The COUNTY shall continue to make payments on the undisputed portion of the contract in accordance with the contract documents during the pendency of any claim.

C. Claims by the CONTRACTOR shall be resolved in the following manner: (1) Upon receiving the claim and supporting data, the COUNTY shall within fifteen (15) calendar days respond to the claim in writing stating that the claim is either approved or denied. If denied, the COUNTY shall specify the grounds for denial. The CONTRACTOR shall then have fifteen (15) calendar days in which to provide additional supporting documentation, or to notify the COUNTY that the original claim stands as is. (2) If the claim is not resolved, the COUNTY may, at its option, choose to submit the matter to mediation. A mediator shall be mutually selected by the parties and each party shall pay one-half (1/2) the expense of mediation. If the COUNTY declines to mediate the dispute, the CONTRACTOR may bring an action in a court of competent jurisdiction in and for Lake County, Florida.

D. Claims by the COUNTY against the CONTRACTOR shall be made in writing to the CONTRACTOR as soon as the event leading to the claim is discovered by the COUNTY. Written supporting data shall be submitted to the CONTRACTOR. All claims shall be priced in accordance with the provisions of the section in this document entitled "Changes in Work". The CONTRACTOR shall respond in writing within fifteen (15) calendar days of receipt of the claim. If the claim cannot be resolved, the COUNTY shall have the option to submit the matter to mediation as set forth in (C) above.

E. Arbitration shall not be considered as a means of dispute resolution.

F. **NO CLAIM FOR DAMAGES OR ANY CLAIM OTHER THAN FOR AN EXTENSION OF TIME SHALL BE MADE OR ASSERTED AGAINST THE COUNTY BY REASON OF ANY DELAYS.** No interruption, interference, inefficiency, suspension or delay in the commencement or progress of the work shall relieve the CONTRACTOR of its duty to perform or give rise to any right to damages or additional compensation from the COUNTY. The CONTRACTOR expressly acknowledges and agrees that the CONTRACTOR shall receive no damages for delay. However, this provision shall not preclude recovery or damages by the CONTRACTOR for hindrances or delays due solely to fraud, bad faith or active interference on the part of the COUNTY. Otherwise, CONTRACTOR shall be entitled to extensions of the contract time as the sole and exclusive remedy for such resulting delay, in accordance with and to the extent specifically provided above.

6.10 Acceptance of the Work and Final Payment. The work delivered and services rendered under this Agreement shall remain the property of the CONTRACTOR and shall not be deemed complete until a physical inspection and actual usage of the product(s) and/or service(s) is (are) accepted by the COUNTY and shall be in compliance with the terms herein, fully in accord with the specifications and of the highest quality. Any goods and/or services purchased under this Agreement may be tested/inspected for compliance with the specifications listed.

A. Final Inspection. When all materials have been furnished, all work has been performed, and the construction contemplated by the contract has been satisfactorily completed, the COUNTY shall make the final inspection. The final inspection shall be completed within five (5) business days of receipt of notification from the CONTRACTOR that the Service is ready. The COUNTY shall notify the CONTRACTOR if necessary of any deficiencies with the Service, and the CONTRACTOR shall correct all deficiencies before final acceptance and payment is made.

B. Maintenance of Work. The CONTRACTOR shall maintain all work in as-new condition until the final inspection is completed and the work is accepted by the COUNTY. All insurance shall be maintained until final acceptance by the COUNTY.

C. Final Acceptance. When the Service or any portion thereof, as designated by the COUNTY, is ready for its intended use, the COUNTY and any other invited parties shall make an inspection of the Service, to verify its completeness and develop a punch list of items needing completion or correction before final payment will be made. The CONTRACTOR shall have ten (10) calendar days to correct all deficiencies. An eighty dollar ($80.00) re-inspection fee shall be applied for the third inspection and any required re-inspection thereafter. The COUNTY shall have the right to exclude the CONTRACTOR from those portions of the work designated as complete after the inspection; provided, however, that the CONTRACTOR will have reasonable access for the time allotted by the COUNTY to complete or correct items on the punch list.

When the work provided for under this Agreement has been completely performed by the CONTRACTOR, and the final inspection has been made by the COUNTY, a final invoice will be prepared by the CONTRACTOR. The amount of this invoice, less any sums that may have been deducted or retained under the provisions of this Agreement, will be paid to the CONTRACTOR in accordance with Article 4 of this Agreement, and after the CONTRACTOR has agreed in writing to accept the balance due, as determined by the COUNTY, as full settlement of the account under the contract and of all claims in connection therewith. Occupancy by the COUNTY alone does not constitute final acceptance.

D. Waiver of Claims. The CONTRACTOR's acceptance of final payment shall constitute a full waiver of any and all claims by the CONTRACTOR against the COUNTY arising out of the contract or otherwise related to the Service, except those previously made in writing and identified by the CONTRACTOR as unsettled at the time the final estimate is prepared. Neither the acceptance of the work nor payment by the COUNTY shall be deemed a waiver of the COUNTY's rights to enforce any continuing obligations of the CONTRACTOR or to the recovery of damages for defective work not discovered by the COUNTY at the time of final inspection.

E. Termination of Contractor's Responsibilities. This Agreement will be considered complete when all work has been completed and accepted by the COUNTY and all warranty periods have expired. The CONTRACTOR will then be released from further obligation except as set forth in this Agreement.

F. Recovery Rights Subsequent to Final Payment. The COUNTY reserves the right, should an error be discovered in the invoice, or should proof of defective work or materials used by or on the part of the CONTRACTOR be discovered after the final payment has been made, to claim and recover from the CONTRACTOR by process of law, such sums as may be sufficient to correct the error or make good the defects in the work and materials, including any fees or costs associated with the additional services of the COUNTY.

6.11 Warranties. All warranties shall begin on the date of the COUNTY's acceptance and shall last for a period of twelve (12) months unless otherwise specified in the scope of services, plans or specifications. The CONTRACTOR shall obtain and assign to the COUNTY all express warranties given to the CONTRACTOR or any subcontractors by any material suppliers, equipment or fixtures to be incorporated into the Service. The CONTRACTOR warrants to the COUNTY that any materials and equipment furnished under the contract documents shall be new unless otherwise specified, and that all work shall be of good quality, free from defects and in conformance with the contract documents. The CONTRACTOR further warrants to the COUNTY that all materials and equipment furnished under the contract documents shall be applied, installed, connected, erected, used, cleaned and conditioned in accordance with the instructions of the applicable manufacturers, fabricators, suppliers or processors except as otherwise provided for the contract documents. This warranty requirement shall remain in force for the full period identified above, regardless of whether CONTRACTOR is still under contract at the time of the defect. These warranties are in addition to those implied warranties to which the COUNTY is entitled as a matter of law. Further, a specific warranty period is included as a requirement as follows:

A. If sod is used as part of an individual Service, it shall be warranted to be free of noxious and invasive weeds, disease, and insects. If pests and/or noxious weeds manifest themselves within sixty (60) days of placement of the sod, the CONTRACTOR shall treat the affected areas. The process for treating these areas shall be approved by the COUNTY. If the sod does not meet any of the required specifications, the CONTRACTOR shall be responsible to replace it at no expense to the COUNTY. It shall be the responsibility of the CONTRACTOR to insure that the sod is sufficiently established as described as specified in the scope of services, plans, or specifications. If the sod dies or does not become established the CONTRACTOR shall be responsible for the replacement at no cost to the COUNTY.

B. Correcting Defects Covered Under Warranty. The CONTRACTOR shall be responsible for promptly correcting any deficiency, at no cost to the COUNTY, within five (5) calendar days after the COUNTY notifies the CONTRACTOR of such deficiency in writing. If the CONTRACTOR fails to honor the warranty and/or fails to correct or replace the defective work or items within the period specified, the COUNTY may, at its discretion, notify the CONTRACTOR in writing that the CONTRACTOR may be debarred as a COUNTY vendor, and/or become subject to contractual default if the corrections or replacements are not completed to the satisfaction of the COUNTY within five (5) calendar days of receipt of the notice. If the CONTRACTOR fails to satisfy the warranty within the period specified in the notice, the COUNTY may (a) place the CONTRACTOR in default of its contract and/or (b) procure the products or services from another source and charge the CONTRACTOR for any additional costs that are incurred by the COUNTY for this work or items, either through a credit memorandum or through invoicing.

6.12 Liquidated Damages. Unless otherwise agreed to, weather events are specifically excluded as excused cause for delay under this agreement and no additional days shall be given for rain days. If the deficiencies have been noted and the remedies have not been completed within the contracted time, the COUNTY may send out a notification notifying CONTRACTOR of assessment of Liquidated Damages that can be applied for any day over the time allowed under this Agreement.

The COUNTY and the CONTRACTOR recognize that, since time is of the essence for this agreement, the COUNTY will suffer financial loss if the work is not completed within the time specified. The COUNTY will be entitled to assess, as Liquidated Damages, but not as a penalty, for each calendar day after the scheduled completion date the Service continues. The Service shall be deemed to be completed on the date the work is considered complete to the satisfaction of the COUNTY. The CONTRACTOR hereby expressly waives and relinquishes any right which it may have to seek to characterize the Liquidated Damages as a penalty. The parties agree that the Liquidated Damages sum represents a fair and reasonable estimate of

the COUNTY'S actual damages at the time of contracting if the CONTRACTOR fails to complete the work in a timely manner. The Liquidated Damages shall be as follows:

Specific Service Amount	Daily Charge Per Calendar Day
$5,000 and under	$ 25
Over $5,000 but less than $10,000	$ 65
$10,000 or more but less than $20,000	$ 91
$20,000 or more but less than $30,000	$121
$30,000 or more but less than $40,000	$166
$40,000 or more but less than $50,000	$228
$50,001 or more	$250

COUNTY shall retain from the compensation to be paid to CONTRACTOR the above described sum. Any CONTRACTOR that is in default for not completing the work within the time specified, at the option of the COUNTY, may not permitted to perform work for the COUNTY until the Service is complete and the liquidated damages sum is satisfied.

6.13 Sanitation. If the Service does not involve interior work, the CONTRACTOR shall be required to provide and maintain adequate sanitary conveniences for the use of persons employed for the Service. These conveniences shall be maintained at all times without nuisance, and their use shall be strictly enforced. The location of these conveniences shall be subject to the COUNTY's Project Manager's approval. All such facilities shall be installed and maintained in accordance with applicable federal, state, and local laws.

6.14 Submittals and Equal Products.

A. Submittals of products required for the Service assigned to the CONTRACTOR hereunder, shall be supplied to the COUNTY for pre-approval prior to the start of the work. These documents shall be provided to the COUNTY at least one (1) week before the installation.

B. If a product or service requested by the COUNTY for the Service has been identified in the specifications by a brand name, and has not been notated as a "No Substitute," item, such identification is intended to be descriptive and not restrictive, and is to indicate the quality and characteristics of product or service that will be acceptable. If the CONTRACTOR offers an alternate product or service for consideration, such product must be clearly identified by the CONTRACTOR to the COUNTY. The COUNTY shall make a determination whether the alternate meets the salient characteristics of the specifications. An alternate product will not be considered for any item notated "No Substitute."

C. Unless the CONTRACTOR clearly indicates in its response that it is proposing an alternate product, the response shall be considered as offering the same brand name referenced in the specifications. If the CONTRACTOR proposes to furnish an alternate product or service, the brand name of the product or service to be furnished shall be clearly identified. A formal submittal for the alternate/shop drawings shall be submitted. The evaluation of the alternate and the determination as to acceptability of the alternate product or service shall be the responsibility of the COUNTY and will be based upon information furnished by the CONTRACTOR. The COUNTY will not be responsible for locating or securing any information which is not included in the CONTRACTOR'S response. To ensure that sufficient information is available, the CONTRACTOR shall furnish as part of the bid or proposal all descriptive material by providing the manufacturer specification sheets so the COUNTY can make an informed determination whether the

product offered meets the salient characteristics required by the specifications. Failure to do so will require the use of the specified products.

6.15 Fees. The following is a list of fees that may be assessed to the CONTRACTOR during the term of this Agreement. These fees are assessed to help offset the additional costs associated with COUNTY labor and vehicle usage required for unnecessary inspections or missed appointments. The fees, if any, shall be deducted from the final invoices.

A. Failure to respond to emergency calls	$250.00/day
B. Late to emergency calls	$36.00/hour
C. Failure to provide documents or reports	$75.00/day

Any re-inspection fee charged to the COUNTY by other agencies having jurisdiction over the Service, shall additionally be charged back to the CONTRACTOR.

Article 7. Special Terms and Conditions

7.1 Termination. This Agreement may be terminated by the COUNTY upon ten (10) calendar days advance written notice to the other party; but if any work, service or task hereunder is in progress but not completed on the date of termination, then this Agreement may be extended upon written approval of the COUNTY until said work, service or task is completed and accepted.

A. Termination for Convenience. In the event this Agreement is terminated or cancelled upon the request and for the convenience of COUNTY with the required ten (10) calendar day advance written notice, COUNTY shall reimburse CONTRACTOR for actual work satisfactorily completed.

B. Termination for Cause. Termination by COUNTY for cause, default, or negligence on the part of CONTRACTOR shall be excluded from the foregoing provision. Termination costs, if any, shall not apply. The ten (10) calendar day advance notice requirement is waived in the event of termination for cause.

C. Termination Due to Unavailability of Funds in Succeeding Fiscal Years. When funds are not appropriated or otherwise made available to support continuation of performance in a subsequent fiscal year, this Agreement shall be canceled and the CONTRACTOR shall be reimbursed for the reasonable value of any non-recurring costs incurred but not amortized in the price of the supplies or services/Tasks delivered under this Agreement.

7.2 Assignment of Agreement. This Agreement shall not be assigned except with the written consent of the COUNTY's Procurement Services Director. No such consent shall be construed as making the COUNTY a party to the assignment or subjecting the COUNTY to liability of any kind to any assignee. No assignment shall under any circumstances relieve the CONTRACTOR of liability and obligations under this Agreement and all transactions with the COUNTY must be through the CONTRACTOR. Additionally, unless otherwise stipulated herein, the CONTRACTOR shall notify and obtain prior written consent from the COUNTY prior to being acquired or subject to a hostile takeover. Any acquisition or hostile takeover without the prior consent of the COUNTY may result in termination of this Agreement for default.

7.3 Insurance.

A. The CONTRACTOR shall purchase and maintain at all times during the term of this Agreement, without cost or expense to the COUNTY, policies of insurance as indicated below, with a

company or companies authorized to do business in the State of Florida, and which are acceptable to the COUNTY, insuring the CONTRACTOR against any and all claims, demands, or causes of action whatsoever, for injuries received or damage to property relating to the performance of duties, services and/or obligations of the CONTRACTOR under the terms and provisions of the Agreement. An original certificate of insurance, indicating that the awarded vendor has coverage in accordance with the requirements of this section, shall be furnished by the vendor to the Contracting Officer within five (5) working days of such request and must be received and accepted by the County prior to contract execution and/or before any work begins.

The parties agree that the policies of insurance and confirming certificates of insurance shall insure the CONTRACTOR is in accordance with the following minimum limits:

(i) General Liability insurance on forms no more restrictive than the latest edition of the Occurrence Form Commercial General Liability policy (CG 00 01) of the Insurance Services Office or equivalent without restrictive endorsements, with the following minimum limits and coverage:

Each Occurrence/General Aggregate	$1,000,000/2,000,000
Products-Completed Operations	$2,000,000
Personal & Adv. Injury	$1,000,000
Fire Damage	$50,000
Medical Expense	$5,000
Contractual Liability	Included

(ii) Automobile liability insurance, including owned, non-owned, and hired autos with the following minimum limits and coverage:

Combined Single Limit	$1,000,000

(iii) Workers' compensation insurance based on proper reporting of classification codes and payroll amounts in accordance with Chapter 440, Florida Statutes, and/or any other applicable law requiring workers' compensation (Federal, maritime, etc). If not required by law to maintain workers compensation insurance, the vendor must provide a notarized statement that if he or she is injured, he or she will not hold the County responsible for any payment or compensation.

(iv) Employers Liability with the following minimum limits and coverage:

Each Accident	$1,000,000
Disease-Each Employer	$1,000,000
Disease-Policy Limit	$1,000,000

(v) Professional liability and/or specialty insurance (medical malpractice, engineers, architect, consultant, environmental, pollution, errors and omissions, etc.) insurance as applicable, with minimum limits of $1,000,000 and annual aggregate of $2,000,000.

B. Lake County, a Political Subdivision of the State of Florida, and the Board of County Commissioners, shall be named as additional insured as their interest may appear all applicable policies.

C. Certificate(s) of insurance shall provide for a minimum of thirty (30) days prior written notice to the County of any change, cancellation, or nonrenewal of the required insurance.

D. Certificate(s) of insurance shall identify the RFP number in the Description of Operations section of the Certificate.

E. Certificate of insurance shall evidence a waiver of subrogation in favor of the COUNTY, that coverage shall be primary and noncontributory, and that each evidenced policy includes a Cross Liability or Severability of Interests provision, with no requirement of premium by the COUNTY.

F. Certificate holder shall be:

LAKE COUNTY, A POLITICAL SUBDIVISION OF THE STATE OF FLORIDA,
AND THE BOARD OF COUNTY COMMISSIONERS.
P.O. BOX 7800
TAVARES, FL 32778-7800

G. All self-insured retentions shall appear on the certificate(s) and shall be subject to approval by the COUNTY. At the option of the COUNTY, the insurer shall reduce or eliminate such self-insured retentions; or the CONTRACTOR shall be required to procure a bond guaranteeing payment of losses and related claims expenses.

H. The COUNTY shall be exempt from, and in no way liable for, any sums of money, which may represent a deductible or self-insured retention in any insurance policy. The payment of such deductible or self-insured retention shall be the sole responsibility of the CONTRACTOR and/or subcontractor providing such insurance.

I. The CONTRACTOR shall be responsible for subcontractors and their insurance. Subcontractors are to provide Certificates of Insurance to the COUNTY evidencing coverage and terms in accordance with the Contractor's requirements.

J. Failure to obtain and maintain such insurance as set out above will be considered a breach of contract and may result in termination of the contract for default.

K. Neither approval by the COUNTY of any insurance supplied by the CONTRACTOR, nor a failure to disapprove that insurance, shall relieve the CONTRACTOR of full responsibility of liability, damages, and accidents as set forth herein.

7.4 Indemnity. The CONTRACTOR shall indemnify and hold COUNTY and its agents, officers, commissioners or employees harmless for any damages resulting from failure of the CONTRACTOR to take out and maintain the above insurance. Additionally, the CONTRACTOR agrees for good and valuable consideration in the amount of ten dollars ($10.00) to indemnify, and hold the Board of County Commissioners, Lake County, Florida, and its officers, commissioners, employees and agents free and harmless from and against any and all losses, penalties, damages, settlements, costs, charges, professional fees or other expenses or liabilities resulting from the negligent act, error or omission of the CONTRACTOR, its agents, employees or representative, in the performance of the CONTRACTOR's duties set forth in this Agreement.

7.5 Independent Contractor. The CONTRACTOR, and all its employees, agree that they shall be acting as an independent contractor and shall not be considered or deemed to be an agent, employee, joint venturer, or partner of COUNTY. The CONTRACTOR shall have no authority to contract for or bind COUNTY in any manner and shall not represent itself as an agent of COUNTY or as otherwise authorized to act for or on behalf of COUNTY. Additionally, the CONTRACTOR warrants that it has not employed or retained any company or person, other than a bona fide employee working solely for the CONTRACTOR to solicit or secure this Agreement and that it has not paid or agreed to pay any person, company, corporation, individual, or firm other than a bona fide employee working solely for the CONTRACTOR any fee, commission, percentage, gift, or other consideration contingent upon on resulting from the award or making of this Agreement.

7.6 Return of Materials. Upon the request of the COUNTY, but in any event upon termination of this Agreement, the CONTRACTOR shall surrender to the COUNTY all memoranda, notes, records, drawings, manuals, computer software, and other documents or materials pertaining to the services hereunder, that were furnished to the CONTRACTOR by the COUNTY pursuant to this Agreement.

7.7 Public Entity Crimes. A person or affiliate who has been placed on the convicted vendor list following a conviction of a public entity crime may not be awarded or perform work as a contractor, supplier, subcontractor, or consultant under a contract with any public entity in excess of the threshold amount provided in Florida Statutes, Section 287.017 for Category Two for a period of thirty-six (36) months from the date of being placed on the convicted vendor list.

7.8 Conflict of Interest. The CONTRACTOR agrees that it will not engage in any action that would create a conflict of interest in the performance of its obligations pursuant to this Agreement, or which would violate or cause others to violate the provisions of Part III, Chapter 112, Florida Statutes, relating to ethics in government. Further, CONTRACTOR hereby certifies that no officer, agent, or employee of COUNTY has any material interest either directly or indirectly in the business of CONTRACTOR conducted here and that no such person shall have any such interest at any time during the term of this Agreement unless approved by the COUNTY.

7.9 Retaining Other Contractors. Nothing herein shall be deemed to preclude the COUNTY from retaining the services of other persons or entities undertaking the same or similar services as those undertaken by the CONTRACTOR or from independently developing or acquiring materials or programs that are similar to, or competitive with, the services provided under this Agreement.

While the COUNTY has listed all major items which are utilized by COUNTY departments in conjunction with their operations, there may be similar or ancillary items that must be purchased by the COUNTY during the term of this Agreement. Under these circumstances, a COUNTY representative will contact the CONTRACTOR to obtain a price quote for the similar or ancillary items. The COUNTY reserves the right to award these ancillary items to the CONTRACTOR, another vendor based on the lowest price quoted, or to acquire the items through a separate solicitation.

7.10 Accuracy. The CONTRACTOR is responsible for the professional quality, technical accuracy, timely completion and coordination of all the services furnished hereunder. The CONTRACTOR shall, without additional compensation, correct or revise any errors, omissions or other deficiencies in resulting from the services provided herein.

7.11 Additional Services. Services not specifically identified in this Agreement may be added to the Agreement upon execution of a written amendment. The COUNTY reserves the right to award any

additional services to the CONTRACTOR or to acquire the items from another vendor through a separate solicitation.

7.12 Right to Audit. The COUNTY reserves the right to require CONTRACTOR to submit to an audit by any auditor of the COUNTY's choosing. CONTRACTOR shall provide access to all of its records, which relate directly or indirectly to this Agreement at its place of business during regular business hours. CONTRACTOR shall retain all records pertaining to this Agreement and upon request make them available to the COUNTY for three (3) complete calendar years following expiration of the Agreement. CONTRACTOR agrees to provide such assistance as may be necessary to facilitate the review or audit by the COUNTY to ensure compliance with applicable accounting and financial standards. This provision is hereby considered to be included within, and applicable to, any subcontractor agreement entered into by the CONTRACTOR in performance of any work hereunder.

If an audit inspection or examination pursuant to this section discloses overpricing or overcharges of any nature by the CONTRACTOR to the COUNTY in excess of one percent (1%) of the total contract billings, in addition to making adjustments for the overcharges, the reasonable actual cost of the COUNTY's audit shall be reimbursed to the COUNTY by the CONTRACTOR. Any adjustments and/or payments which must be made as a result of any such audit or inspection of the CONTRACTOR's invoices and/or records shall be made within a reasonable amount of time, but in no event shall the time exceed ninety (90) calendar days, from presentation of the COUNTY's audit findings to the CONTRACTOR.

7.13 Public Records.

A. All electronic files, audio and/or video recordings, and all papers pertaining to any activity performed by the contractor for or on behalf of the COUNTY shall be the property of the COUNTY and will be turned over to the COUNTY upon request. In accordance with Chapter 119, Florida Statutes, each file and all papers pertaining to any activities performed for or on behalf of the COUNTY are public records available for inspection by any person even if the file or paper resides in the CONTRACTOR's office or facility. The CONTRACTOR shall maintain the files and papers for not less than three (3) complete calendar years after the Service has been completed or terminated, or in accordance with any grant requirements, whichever is longer. Prior to the close out of the contract, the CONTRACTOR shall appoint a records custodian to handle any records request and provide the custodian's name and telephone number(s) to the Contracting Officer.

B. Any copyright derived from this Agreement shall belong to the author. The author and the CONTRACTOR shall expressly assign to the COUNTY nonexclusive, royalty free rights to use any and all information provided by the CONTRACTOR in any deliverable and/or report for the COUNTY's use which may include publishing in COUNTY documents and distribution as the COUNTY deems to be in the COUNTY's best interests. If anything included in any deliverable limits the rights of the COUNTY to use the information, the deliverable shall be considered defective and not acceptable and the CONTRACTOR will not be eligible for any compensation.

C. Pursuant to Section 119.0701, Florida Statutes, the CONTRACTOR shall comply with the Florida Public Records' laws, and shall:

1. Keep and maintain public records required by the COUNTY to perform the services identified herein.

2. Upon request from the COUNTY's custodian of public records, provide the COUNTY with a copy of the requested records or allow the records to be inspected or copied within a reasonable time at a cost that does not exceed the cost provided for by law.

3. Ensure that public records that are exempt or confidential and exempt from public records disclosure requirements are not disclosed except as authorized by law for the duration of the contract term and following completion of the contract if the CONSULTANT does not transfer the records to the COUNTY.

4. Upon completion of the contract, transfer, at no cost, to the COUNTY all public records in possession of the CONTRACTOR or keep and maintain public records required by the COUNTY to perform the service. If CONTRACTOR transfers all public records to the COUNTY upon completion of the contract, CONTRACTOR shall destroy any duplicate public records that are exempt, or confidential and exempt, from public records disclosure requirements. If CONTRACTOR keeps and maintains public records upon completion of the contract, CONTRACTOR shall meet all applicable requirements for retaining public records. All records stored electronically must be provided to the COUNTY, upon request from the COUNTY's custodian of public records, in a format that is compatible with the information technology systems of the COUNTY.

IF CONTRACTOR HAS QUESTIONS REGARDING THE APPLICATION OF CHAPTER 119, FLORIDA STATUTES, TO CONTRACTOR'S DUTY TO PROVIDE PUBLIC RECORDS RELATING TO THIS CONTRACT, CONTACT THE CUSTODIAN OF PUBLIC RECORDS SANDRA ROGERS, AT LAKE COUNTY, 315 W. MAIN STREET, TAVARES, FL 32778, OR AT 352-343-9839 OR VIA EMAIL AT SROGERS@LAKECOUNTYFL.GOV.

7.14 Force Majeure. The parties will exercise every reasonable effort to meet their respective obligations hereunder, but shall not be liable for delays resulting from force majeure or other causes beyond their reasonable control, including, but not limited to, compliance with any Government law or regulation, acts of nature, acts or omissions of the other party, Government acts or omissions, fires, strikes, national disasters, wars, riots, transportation problems and/or any other cause whatsoever beyond the reasonable control of the parties. Any such cause will extend the performance of the delayed obligation to the extent of the delay so incurred.

7.15 Business Hours of Operation. Unless otherwise specified in the technical specifications, all work performed shall be accomplished between the hours of 8:00 A.M. and 5:00 P.M., Monday through Friday, and no work shall be performed on Saturdays, Sundays, or COUNTY Holidays, unless permission to work has been requested in writing by the CONTRACTOR and approval, in writing, has been granted by the COUNTY. Request for permission to work must be received by the COUNTY no less than two (2) days prior to the requested workday. The exception to this pre-approval requirement would be in the case of an emergency in which the emergency specification as outlined in General Terms and Conditions, Section 3, Emergencies, would apply. COUNTY Holidays are as follows: New Year's Day; Martin Luther King, Jr. Day; Presidents' Day; Memorial Day; Independence Day; Labor Day; Veteran's Day; Thanksgiving Day; Day after Thanksgiving; and Christmas Day.

Special schedules may be established if necessary because of problems with noise or similar difficulties affecting other COUNTY facilities, County operations, or citizens in homes or buildings/rooms adjacent to

the work being completed. When the CONTRACTOR requests and is approved for Saturday, Sunday or Holiday work, the COUNTY may assess the CONTRACTOR the sum of Two Hundred Fifty Dollars ($250.00) per man per day for each Saturday, Sunday or recognized Holiday worked or planned to work. These fees will be deducted from the final invoice.

7.16 Minimum Wage. The wage rate paid to all laborers, mechanics and apprentices employed by the CONTRACTOR for the work under the Agreement shall not be less than the prevailing wage rates for similar classifications of work as established by the federal government and enforced by the U.S. Department of Labor, Wages and Hours Division, and Florida's Minimum Wage requirements in Article X, Section 24(f) of the Florida Constitution and enforced by the Florida Legislature by statute or the State Agency for Workforce Innovation by rule, whichever is higher.

7.17 Protection of Property. All existing structures, utilities, services, roads, trees, shrubbery and property in which the COUNTY has an interest shall be protected against damage or interrupted services at all times by the CONTRACTOR during the term of this contract, and the CONTRACTOR shall be held responsible for repairing or replacing damaged property to the satisfaction of the COUNTY which is damaged by reason of the CONTRACTOR's operation on the property. In the event the CONTRACTOR fails to comply with these requirements, the COUNTY reserves the right to secure the required services and charge the costs of such services back to the CONTRACTOR. All items damaged as a result of CONTRACTOR or subcontractor operations belonging to third parties, such as but not limited to: sidewalks, irrigation, curbs, pipes, drains, water mains, pavement, mail boxes, turf, signs, or other property shall either be repaired or replaced by the CONTRACTOR, at the CONTRACTOR'S expense, in a manner prescribed by, and at the sole satisfaction of the COUNTY.

Furthermore, if the Service is to be completed within COUNTY facilities, the CONTRACTOR shall be responsible for repairing or replacing any portion of any COUNTY facility, whether interior or exterior, damaged by reason of the CONTRACTOR's operation within the property. In the event the CONTRACTOR fails to comply with these requirements, the COUNTY reserves the right to secure the required services and charge the costs of such services back to the CONTRACTOR. All items within a facility belonging to third parties, or to commissioners, officers, employees, leasees, invitees, or agents of the COUNTY, including but not limited to personal items and/or furniture shall either be repaired or replaced by the CONTRACTOR, at the CONTRACTOR'S expense, in a manner prescribed by, and at the sole satisfaction of the COUNTY.

7.18 Risk of Loss. The CONTRACTOR assumes the risk of loss of damage to the COUNTY'S property during possession of such property by the CONTRACTOR, and until delivery to and acceptance of that property to the COUNTY. The CONTRACTOR shall immediately repair, replace or make good on the loss or damage without cost to the COUNTY, whether the loss or damage results from acts or omissions, negligent or otherwise, of the CONTRACTOR or a third party.

7.19 Accident Notification. If in the course of completing work as part of this Agreement there is an accident that involves the public, the CONTRACTOR shall as soon as possible inform the COUNTY of the incident by telephone. The CONTRACTOR shall follow up in writing within two (2) business days of the incident. If Law Enforcement was involved and has written a report, the CONTRACTOR shall forward a copy of the report to the COUNTY.

Article 8. Miscellaneous Provisions

8.1 This Agreement is made under, and in all respects shall be interpreted, construed, and governed by and in accordance with, the laws of the State of Florida. Venue for any legal action resulting from this Agreement shall lie in Lake County, Florida.

8.2 Neither party may assign any rights or obligations under this Agreement to any other party unless specific written permission from the other party is obtained.

8.3 The captions utilized in this Agreement are for the purposes of identification only and do not control or affect the meaning or construction of any of the provisions hereof.

8.4 This Agreement shall be binding upon and shall inure to the benefit of each of the parties and of their respective successors and permitted assigns.

8.5 This Agreement may not be amended, released, discharged, rescinded or abandoned, except by a written instrument duly executed by each of the parties hereto.

8.6 The failure of any party hereto at any time to enforce any of the provisions of this Agreement will in no way constitute or be construed as a waiver of such provision or of any other provision hereof, nor in any way affect the validity of, or the right thereafter to enforce, each and every provision of this Agreement.

8.7 During the term of this Agreement the CONTRACTOR assures COUNTY that it is in compliance with Title VII of the 1964 Civil Rights Act, as amended, and the Florida Civil Rights Act of 1992, in that CONTRACTOR does not on the grounds of race, color, national origin, religion, sex, age, disability or marital status, discrimination in any form or manner against the CONTRACTOR employees or applicants for employment. The CONTRACTOR understands and agrees that this Agreement is conditioned upon the veracity of this statement of assurance.

8.8 The CONTRACTOR shall at all times comply with all Federal, State and local laws, rules and regulations.

8.9 The employee(s) of CONTRACTOR shall be considered at all times its employee(s) and not an employee(s) or agent(s) of COUNTY. CONTRACTOR shall provide employee(s) capable of performing the work as required. The COUNTY may require the CONTRACTOR to remove any employee it deems unacceptable.

8.10 Any individual, corporation, or other entity that attempts to meet its contractual obligations with the COUNTY through fraud, misrepresentation or material misstatement, may be debarred for up to five (5) years. The COUNTY as a further sanction may terminate or cancel any other contracts with such individual, corporation, or entity. Such individual or entity shall be responsible for all direct or indirect costs associated with termination or cancellation, including attorney's fees.

8.11 With the consent of CONTRACTOR, other agencies may make purchases in accordance with the contract. Any such purchases shall be governed by the same terms and conditions as stated herein with the exception of the change in agency name. In addition, although this solicitation is specific to a COUNTY Department, it is agreed and understood that any COUNTY department may avail itself of this contract and purchase any and all items specified herein at the contract price(s) established herein. A contract modification shall be issued by the COUNTY identifying the requirements of the additional COUNTY department(s).

8.12 CONTRACTOR shall act as the prime contractor for all required items and services and shall assume full responsibility for the procurement and maintenance of such items and services. CONTRACTOR shall be considered the sole point of contact with regards to all stipulations, including payment of all charges and meeting all requirements of this Agreement. All subcontractors will be subject to advance review by the COUNTY in terms of competency and security concerns. No change in subcontractors shall be made without consent of the COUNTY. CONTRACTOR shall be responsible for all insurance, permits, licenses and related matters for any and all subcontractors. Even if the subcontractor is self-insured, the COUNTY may require the CONTRACTOR to provide any insurance certificates required by the work to be performed.

8.13 The CONTRACTOR shall either be registered or have applied for registration with the Florida Department of State in accordance with the provisions of Chapter 607, Florida Statutes.

8.14 The invalidity or unenforceability of any particular provision of this Agreement shall not affect the other provisions hereof, and this Agreement shall be construed in all respects as if such invalid or unenforceable provisions were omitted.

8.15 Wherever provision is made in this Agreement for the giving, service or delivery of any notice, statement or other instrument, such notice shall be in writing and shall be deemed to have been duly given, served and delivered, if delivered by hand or mailed by United States registered or certified mail or sent by facsimile, addressed as follows:

If to CONTRACTOR:

Alec Jeffrey Suberman
3939 Silver Star Road
Orlando, FL 32808

If to COUNTY:

County Manager
County Administration Building
315 West Main Street, Suite 308
Post Office Box 7800
Tavares, Florida 32778-7800
Fax: 352-343-5618

Each party hereto may change its mailing address by giving to the other party hereto, by hand delivery, United States registered or certified mail notice of election to change such address.

Article 9. Scope of Agreement

9.1 This Agreement is intended by the parties hereto to be the final expression of their Agreement, and it constitutes the full and entire understanding between the parties with respect to the subject hereof, notwithstanding any representations, statements, or agreements to the contrary heretofore made. Any items not covered under this contract will need to be added via written addendum, and pricing negotiated based on final specifications.

9.2 This Agreement contains the following Attachments, all of which are incorporated herein:

Attachment A	Scope of Services
Attachment B	Addendum(s)
Attachment C	Pricing

Agreement Between Lake County, Florida and Ruby Builders, Inc. for Door Inspection and Maintenance; RFP #16-0434

IN WITNESS WHEREOF, the parties hereto have made and executed this Agreement on the respective dates under each signature: COUNTY through its Board of County Commissioners, signing by and through its Chair and by CONTRACTOR through its duly authorized representative.

CONTRACTOR

Alec Jeffrey Suberman, President
Ruby Builders, Inc.
License #: CGC017011

COUNTY

ATTEST:

Neil Kelly, Clerk of the
Board of County Commissioners
of Lake County, Florida

Sean M. Parks
Chairman

This 27th day of Sept, 2016.

Approved as to form and legality:

Melanie Marsh
County Attorney

ATTACHMENT A: SCOPE OF SERVICES

INITIAL INVENTORY INSPECTION

Within 90 days after contract is awarded, the Vendor shall perform an initial inspection of ***all*** doors in all Lake County facilities. A list of the County buildings is provided with this RFP scope of work. This initial inspection shall include at a minimum those items listed in the Annual Maintenance Inspection plan for this scope of work. For the initial inspection, the Vendor shall prepare a detailed quote, of all items needing repaired or replaced on doors at all facilities to meet the NFPA 80 standard. The pricing for these repairs shall be based on the costs provided by the Vendor in this RFP under the "As Needed" repairs.
Initial Inspection shall consist of;

1. Visiting each facility listed on County Owned Facilities Locations list.

2. Inspecting each facility to determine which doors are fire rated.

3. Provide the County with a detailed inventory of ***all*** doors by building, showing the following information:
   a. Building identification, location, quantity of all non-fire rated and fire rated doors.

   b. A detailed inventory spreadsheet of each door by room and door number, annotating type of door, material make up of door, whether or not the door is fire rated, fire rating if a fire door, size, swing, presence of light, door closure.

   c. The vendor shall assign each door an inventory number. The Vendor shall place a unique identifying sticker on frame. A sample of the sticker the Vendor intends to use shall be at the approval of the County.

4. A detailed report of any repairs that are needed. This report shall show the estimated cost of the repair.

ANNUAL FIRE DOOR MAINTENANCE INSPECTION

The County shall issue a Notice to Proceed for desired repairs identified in the Annual Inspection Report. The Vendor shall maintain and provide records for all work completed. Each inspection shall have all the information/results recorded in a neat, organized written report that is provided to the County in an electronic pdf format by the Vendor. The format and information contained on the inspection report/form shall be approved by the county. This form will be attached to report given to the County. No payment for services will be issued until receipt of a qualified report, without exception.

The Vendor shall verify that the following inspection is performed at a minimum:

Inspect the following as a minimum listed as Acceptance Testing in NFPA 80, section 5.2.3, Acceptance Testing;

1. Labels are clearly visible and legible.

2. No open holes or breaks exist in surfaces of either the door or frame.

3. Glazing, vision light frames, and glazing beads are intact and securely fastened in place, if so equipped.

4. The door, frame, hinges, hardware, and non-combustible threshold are secured, aligned, and in working order, with no visible signs of damage.

5. No parts are missing or broken.

6. Door clearances at the door edge to the frame, on the pull side of the door, do not exceed clearances listed in the NFPA 80, sections 4.8.4, Supporting Construction Clearances and 6.3.1.7, Door Frames Clearances.

7. The self-closing device is operational; that is, the active door completely closes when operated from the full open position.

8. If a coordinator is installed, the inactive leaf closes before the active leaf.

9. Latching hardware operates and secures the door when it is in the closed position.

10. Auxiliary hardware items that interfere or prohibit operation are not installed on the door or frame.

11. No field modifications to the door assembly have been performed that void the label.

12. Meeting edge protection, gasketing and edge seals, where required, are inspected to verify their presence and integrity.

13. Signage affixed to a door meets the requirements listed in NFPA 80, section 4.1.4, Signage.

COUNTY OWNED FACILITIES LOCATIONS					
No.	Bldg #	Building Name	Square Ft	Street Address	City
1	HB-61	320 W Main St	29,241	320 W Main St	Tavares
2	HB-59	323 N Sinclair Ave	3,128	323 N Sinclair Ave	Tavares
3	HB-23	350 N Sinclair Ave	5,300	350 N Sinclair Ave	Tavares
4	HB-52	418 Alfred St.	5,562	418 W. Alfred St	Tavares
5	AB-10	Adkins House (Astor Boat Ramp & Park)	1,000	55420 Front St	Astor
6	HB-32	Ag Center Greenhouses	3,536	30208 SR 19	Tavares
7	HB-31	Agricultural Center	12,884	1951 Woodlea Rd	Tavares
8	CP-01	American Legion	2,030	40924 SR 19	Umatilla
9	KB-12	Animal Control	15,900	28123 County Rd 561	Tavares
10	FB-05	Area I Road Maintenance	4,515	2310 W. Griffin Rd	Leesburg
11	MB-05	Area II Road Maintenance	2,880	609 Disston Ave.	Minneola
12	DB-01	Area III Road Maintenance	2,109	19720 5th St	Umatilla
13	AP-01	Astor Recreational Center	2,480	54835 Alco Rd	Astor
14	AB-03	Astor Residential Drop-Off	248	Astor Transfer Rd	Astor
15	GB-10	BCC Warehouse #1	30,000	32400 County Rd 473	Leesburg
16	GB-10	BCC/Clerk's Warehouse #2	13,000	32400 County Rd 473	Leesburg
17	HB-01	Central Energy Plant - 1975	400	315 W. Main St	Tavares
18	HB-13	Central Energy Plant - 1990	2,080	551 W. Main St	Tavares
19	HB-63	Central Energy Plant - 2009	10,451	435 W. Alfred St.	Tavares
20	HB-55	Communications Maintenance Facility	9,525	20415 Independence Blvd	Groveland
21	LB-03	Community Center - Ferndale	963	15307 Ferndale Comm. Rd	Ferndale
22	AB-08	Community Center - Forest Hills	2,800	31039 Lake Mack Rd	Deland
23	AB-13	Community Center - Paisley	3,200	24954 CR 42	Paisley
24	CB-05	Community Center - Umatilla	3,200	17107 Ball Park Rd	Umatilla
25	HB-02	County Administration Building (CAB)	84,162	315 W. Main St (Bldg A)	Tavares
26	HB-12	Detention Center	260,000	551 W. Main St	Tavares
27	AB-17	Ellis Acres	5,000	25302 CR 42	Paisley
28	HB-22	Emergency Operations Center (ECOC)	28,495	425 W. Alfred St.	Tavares
29	KB-04	Environmental Lab	4,128	13100 County	Tavares

				Landfill Rd	
30	KB-05	Environmental Services Administration	3,000	13130 County Landfill Rd	Tavares
31	CB-11	Fairgrounds - Arena Buildings	200	2101 County Rd 452	Eustis
32	CB-15	Fairgrounds - Ash Ford Bldg	7,000	2101 County Rd 452	Eustis
33	CB-13	Fairgrounds - Clements Bldg	7,560	2101 County Rd 452	Eustis
34	CB-16	Fairgrounds - Expo Bldg	17,814	2101 County Rd 452	Eustis
35	CB-12	Fairgrounds - Laroe Pavilion	12,250	2101 County Rd 452	Eustis
36	CB-14	Fairgrounds - Mayo Bldg	3,000	2101 County Rd 452	Eustis
37	AB-12	Fire Station 10 (was 12)	4,468	23023 SR 40	Astor
38	NB-03	Fire Station 109 (was 91)	3,600	11630 Lakeshore Dr	Clermont
39	AB-04	Fire Station 11 (was 46)	2,400	47544 SR 19	Altoona
40	NB-04	Fire Station 110 (was 93)	3,500	6234 County Rd 561	Clermont
41	NB-05	Fire Station 111 (was 98)	4,400	8805 Bay Lake Rd (CR 565)	Groveland
42	OB-02	Fire Station 112 (was 94)	3,956	16240 County Rd 474	Clermont
43	AB-18	Fire Station 13 (was 21)	7,439	25250 CR 42	Paisley
44	EB-02	Fire Station 15 (was 35)	3,080	40601 Palm Dr	Pine Lakes
45	CB-02	Fire Station 19 (was 47)	2,400	38816 Carroll St	Umatilla
46	CB-01	Fire Station 20 (was 43)	3,600	37711 SR 19	Umatilla
47	EB-01	Fire Station 21 (was 33)	3,600	25100 County Rd 44A	Eustis
48	IB-01	Fire Station 27 (was 42)	3,485	19212 SR 44	Eustis
49	IB-03	Fire Station 39 (was 31)	3,140	31431 Walton Health Ave.	Sorrento
50	BB-04	Fire Station 53 (was 62)	3,226	2505 Spring Lake Rd	Fruitland Pk
51	BB-05	Fire Station 54 (was 66)	3,600	6200 Lake Griffin Rd	Lady Lake
52	FB-01	Fire Station 59 (was 65)	3,610	1201 Lewis Rd	Leesburg
53	GB-01	Fire Station 70 (was 53)	3,503	531 Sunnyside Dr	Leesburg
54	GB-05	Fire Station 71 (was 51)	256	11305 Park Av	Leesburg
55	CB-17	Fire Station 72 (was 52)	3,500	12340 County Rd 44	Leesburg
56	JB-03	Fire Station 76 (was 81)	2,400	8819 County Rd 48	Yalaha
57	KB-13	Fire Station 77 (was 71)	3,650	13431 Ohio Street	Astatula
58	KB-18	Fire Station 78	2,400	16345 CR 448	Mt Dora
59	JB-02	Fire Station 82 (was 85)	2,400	24939 US Hwy 27	Leesburg
60	LB-04	Fire Station 83	2,400	15303 Ferndale Comm Rd	Ferndale
61	LB-05	Fleet Maintenance (New)	31,622	20423 Independence Blvd	Groveland
62	KB-01	Fuel Station Main Shed	128	12835 County Landfill Rd	Tavares

63	KB-02	Fuel Station Office	352	12835 County Landfill Rd	Tavares
64	KB-08	Haz-Mat Storage	198	13100 County Landfill Rd	Tavares
65	KB-07	Haz-Mat Trailer	1,344	13100 County Landfill Rd	Tavares
66	MB-04	Health Clinic - Clermont	1,646	560 W. Desoto St	Clermont
67	FB-04	Health Clinic - Leesburg	4,992	2113 W. Griffin Rd	Leesburg
68	MB-03	Health Clinic - South Lake	5,000	875 Oakley Seaver Dr.	Clermont
69	CB-04	Health Clinic - Umatilla	15,695	249 Collins Av	Umatilla
70	HB-04	Historic Courthouse (HCH)	38,347	317 W. Main St	Tavares
71	HB-64	Horticultural Center	2,294	1952 Woodlea Rd	Tavares
72	HB-11	Judicial Center (JC)	289,580	550 W. Main St	Tavares
73	BB-03	Lady Lake Residential Drop-Off	144	1200 Jackson St	Lady Lake
74	AB-09	Library - Astor	4,464	54905 Alco Rd	Astor
75	OB-03	Library - Cagan Crossings	18,000	16729 Cagan Oaks	Clermont
76	MB-02	Library - M. Baysinger	4,500	756 W. Broad St	Groveland
77	AB-11	Library - Paisley	4,464	24954 CR 42	Paisley
78	GB-07	Library Services	5,900	2401 Woodlea Rd	Tavares
79	NB-02	Loghouse Residential Drop-Off	169	Loghouse Landfill Rd.	Clermont
80	AB-14	McTureous House	1,569	42100 SR 19	Altoona
81	AP-08	McTureous House Restrooms	200	42100 SR 19	Altoona
82	KB-09	MIS Storage (2 Bldg)	168	13100 County Landfill Rd	Tavares
83	HB-17	Mosquito Control Chemical Storage	317	401 S. Bloxham Av	Tavares
84	HB-16	Mosquito Control Paint/Service	9,512	401 S. Bloxham Av	Tavares
85	AB-06	Paisley Residential Drop-Off	144	44225 Spring Creek Rd	Paisley
86	CB-19	Park - North Lake (Maintenance)	1,000	40430 Roger Giles Rd	Umatilla
87	DB-05	Park - North Lake (Baseball Concession)	1,000	40400 Roger Giles Rd	Umatilla
88	DB-05	Park - North Lake (Playground Restroom)	900	40430 Roger Giles Rd	Umatilla
89	DB-05	Park - North Lake (Soccer Concession)	1,000	40420 Roger Giles Rd	Umatilla
90	GP-04	Park - Twin Lakes Restroom	200	35309 CR 473	Bassville Pk
91	HB-60	Parking Garage	536,000	200 N Sinclair	Tavares

92	EB-04	Pine Lakes Residential Drop-Off	90	32520 SR 44	Pine Lakes
93	HB-14	Prelude	34,750	551 W. Main St	Tavares
94	HB-20	Probation Building	2,841	518 W. Main St.	Tavares
95	HB-15	Property Records Storage	10,080	313 S. Bloxham Av	Tavares
96	HB-07	Public Defender	15,400	123 N. Sinclair Av	Tavares
97	HB-19	Public Records Center	14,908	122 E. Main St	Tavares
98	FB-15	Public Transportation	2,942	2440 Hwy 441/27	Fruitland Pk
99	KB-14	Recycle Facility	5,000	13130 County Landfill Rd	Tavares
100	KB-19	Road Operations Center	9,280	12901 County Landfill Rd	Tavares
101	KB-06	Scalehouse	2,200	13130 County Landfill Rd	Tavares
102	MB-11	Sheriff Empire Church Rd Warehouse	4,500	12345 Dry Fork Road	Groveland
103	HB-03	Sheriff's Administration Building (SAB)	37,500	360 W. Ruby St	Tavares
104	MB-25	Sheriff's South Lake Substation	15,729	15855 SR 50	Clermont
105	HB-42	Sheriff's Vehicle Maintenance	10,425	1925 McDonald Av	Eustis
106	KB-10	Sheriff's Work Farm	1,200	13003 County Landfill Rd	Tavares
107	MB-06	South Battalion Chief	3,491	609 S. Disston Ave.	Minneola
108	KB-11	Traffic Operations	6,847	28127 CR 561	Tavares
109	LB-01	Welcome Center	4,770	20763 US HWY 27	Groveland
110	KB-17	WMFO	3,017	12835 County Landfill Rd	Tavares
Total Facilities : 110		**Total Sq Ft.**	**1,844,873**		

ATTACHMENT B: ADDENDUM

LAKE COUNTY
FLORIDA

OFFICE OF PROCUREMENT SERVICES
315 WEST MAIN STREET, SUITE 441
PO BOX 7800
TAVARES FL 32778-7800

PHONE: (352) 343-9839
FAX: 352) 343-9473

ADDENDUM NO. 1
Date: July 1, 2016
RFP No. 16-0434
RFP Title: Fire Door Inspection and Maintenance Services

It is the vendor's responsibility to ensure their receipt of all addenda, and to clearly acknowledge all addenda within their initial bid or proposal response. Acknowledgement may be confirmed either by inclusion of a signed copy of this addendum with their response by completion and return of the addendum acknowledgement section of the solicitation. Failure to acknowledge each addendum may prevent the bid or proposal from being considered for award.

Questions/Answers:

Question 1: During the Initial Inventory Inspection (See page 14), is the intent to notify the County of which doors are fire-rated or which doors should be fire-rated?
Answer 1: We want an inventory of type, size, etc. for ALL doors that are currently in service. The purpose of this contract is to insure that the integrity of the "Fire Doors" has not been compromised and that they are functioning as designed. The contract states that "For the initial inspection, , the Vendor shall prepare a detailed quote, of all items needing repaired or replaced on doors at all facilities to meet the NFPA 80 standard." All though the contract language states an estimate is needed for all fire rated doors, it would be preferred that at the time of the inspection, if the contractor notices an issue with a non-fire rated door, an estimate for the needed repair be forwarded to the County.

Question 2: Are there any building plans available that show where fire walls / barriers are located through these 110 buildings?
Answer 2: No.

Question 3: Will the County provide as built or original drawings to use for the initial inspections?
Answer 3: Only a limited amount of drawings are available.

Question 4: How will the County provide access to the facilities?
Answer 4: The County will have an employee escort them.

Question 5: Will the Contractor be given a master key?
Answer 5: No.

Question 6: Will there have to be a County escort for more secure areas?
Answer 6: Yes

Firm Name: Ruby Builders, Inc. Date: 7/1/16
Signature: _____ Title: President
Typed/Printed Name: A. Jeffrey Suberman

ATTACHMENT C: PRICING

Price per door for the INITIAL INSPECTION and INVENTORY of ALL doors within the Lake County Facilities	$ 20.00
Price per door for an INITIAL INSPECTION and INVENTORY of ALL doors for added buildings after the inception of the contract	$ 20.00
Price per door for the ANNUAL INSPECTION of FIRE doors only	$ 20.00

ADDITIONAL COSTS FOR NEW OR REPLACEMENT UNITS AND MISC. ABUSE AND MISUSE REPAIR	
Labor for regular business hours (8am-5pm) - Cost per hour	$ 80.00
Labor after regular business hours - Cost per hour	$ 95.00
Materials to be supplied at actual cost plus Contractor's mark-up percentage	25 %

HOURLY RATES FOR 'AS NEEDED' REPAIRS	
Lead worker - regular business hours (8am-5pm) - Cost per hour	$ 80.00
Helper - regular business hours (8am-5pm) - Cost per hour	$ 40.00
Lead worker - after regular business hours - Cost per hour	$ 95.00
Helper - after regular business hours - Cost per hour	$ 55.00
Materials to be supplied at actual cost plus Contractor's mark-up percentage	25 %

APPROVAL REQUIRED
☐ APPROVED AS DRAWN
☐ APPROVED AS NOTED
☐ REJECTED
SIGNATURE:
DATE:

PLEASE VERIFY

1. PLEASE SELECT ALUMINUM COLOR:
   ☐ CLEAR ☐ BRONZE

DRAWING NOTES

1. THIS WILL BE FABRICATED & SHIPPED TO THE EXACT DIMENSION SHOWN.
2. ALL DIMENSIONS MUST BE APPROVED, SIGNED, DATED, OR OTHERWISE NOTED ON THIS DRAWING BEFORE FABRICATION CAN BEGIN.

* IN THE EVENT OF CONFLICTS OR DISCREPANCIES AMONG THE CONTRACT DOCUMENTS, INTERPRETATIONS WILL GIVE PRIORITY TO THE TOTAL SECURITY SOLUTIONS APPROVAL DRAWINGS OVER THE PROPOSAL OR ANY OTHER DOCUMENT PROVIDED OR INCLUDED IN THE AGREEMENT.

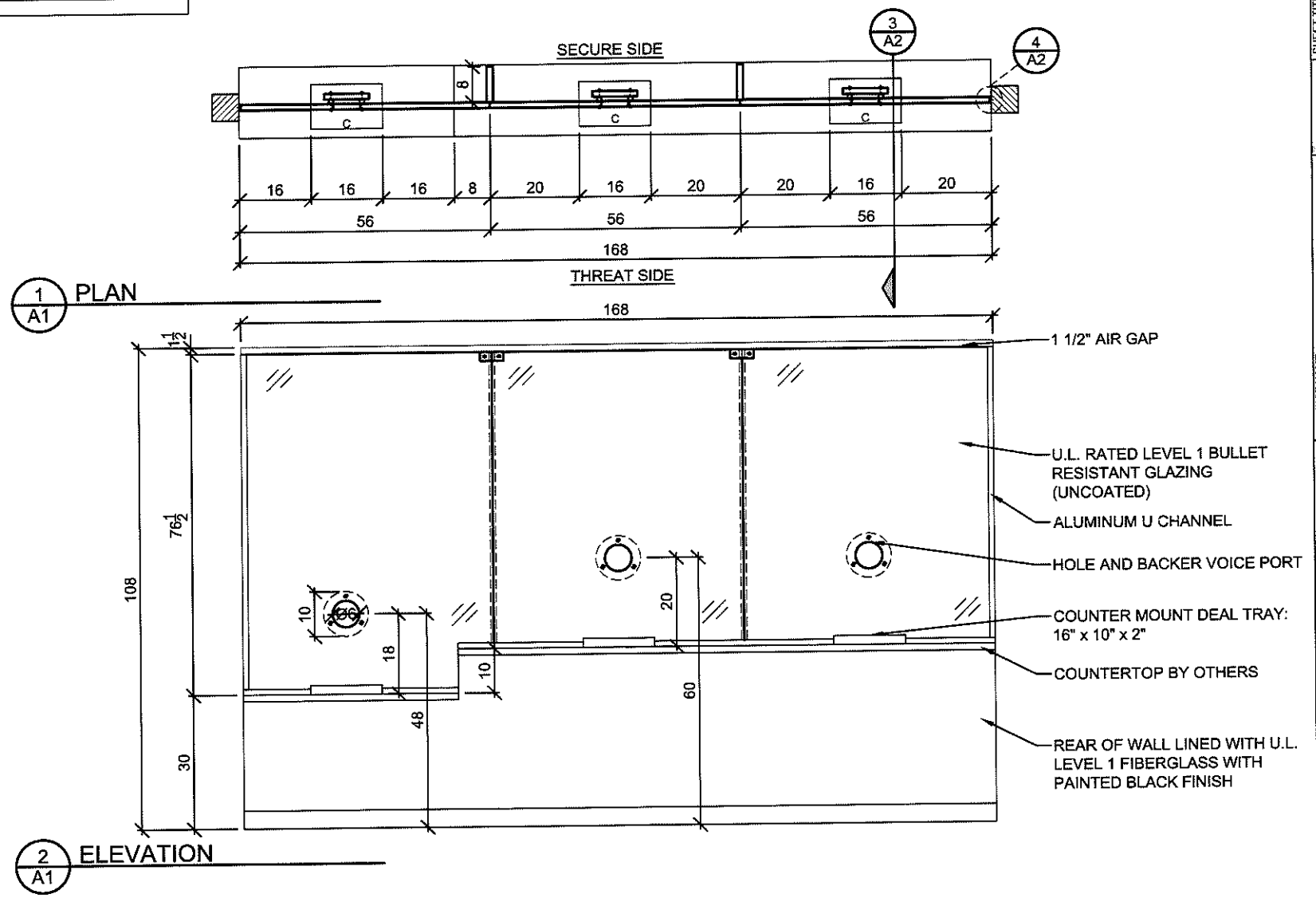

SHEET NUMBER: A1
SHEET TITLE: DETAILS
JOB#: 11228

REVISIONS:

#	DATE	DESCRIPTION
A	08.02.16	UPDATED FROM SALES DRAWING
B	08.12.16	REMOVED LOUVER - JFR

DATE: 07.21.16
DRAWN BY: JH
ENG. BY:
CHECKED BY:

PROJECT NAME: CITY OF CLERMONT

This information in this drawing is confidential, & is the exclusive property of TOTAL SECURITY SOLUTIONS. Written permission is required for reproduction and/or distribution of TOTAL SECURITY SOLUTIONS' materials.

Total Security Solutions
170 National Park Drive
Fowlerville, MI 48836
Phone: 517.223.7607 Fax: 517.223.0605
www.DemandTSS.com

TOTAL SECURITY SOLUTIONS

APPROVAL REQUIRED
☐ APPROVED AS DRAWN
☐ APPROVED AS NOTED
☐ REJECTED
SIGNATURE:
DATE:

PLEASE VERIFY

1. PLEASE SELECT ALUMINUM COLOR:
   ☐ CLEAR ☐ BRONZE

DRAWING NOTES

1. THIS WILL BE FABRICATED & SHIPPED TO THE EXACT DIMENSION SHOWN.
2. ALL DIMENSIONS MUST BE APPROVED, SIGNED, DATED, OR OTHERWISE NOTED ON THIS DRAWING BEFORE FABRICATION CAN BEGIN.

* IN THE EVENT OF CONFLICTS OR DISCREPANCIES AMONG THE CONTRACT DOCUMENTS, INTERPRETATIONS WILL GIVE PRIORITY TO THE TOTAL SECURITY SOLUTIONS APPROVAL DRAWINGS OVER THE PROPOSAL OR ANY OTHER DOCUMENT PROVIDED OR INCLUDED IN THE AGREEMENT.

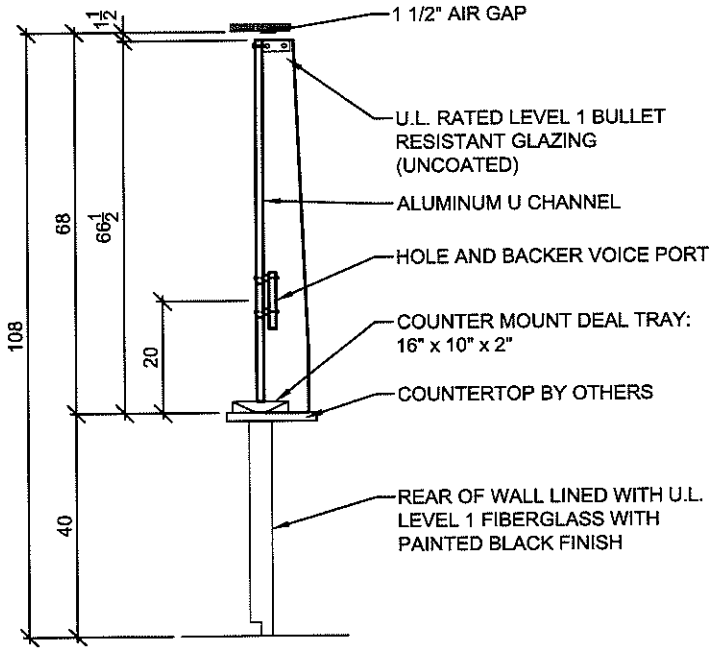

3 / A2 SECTION

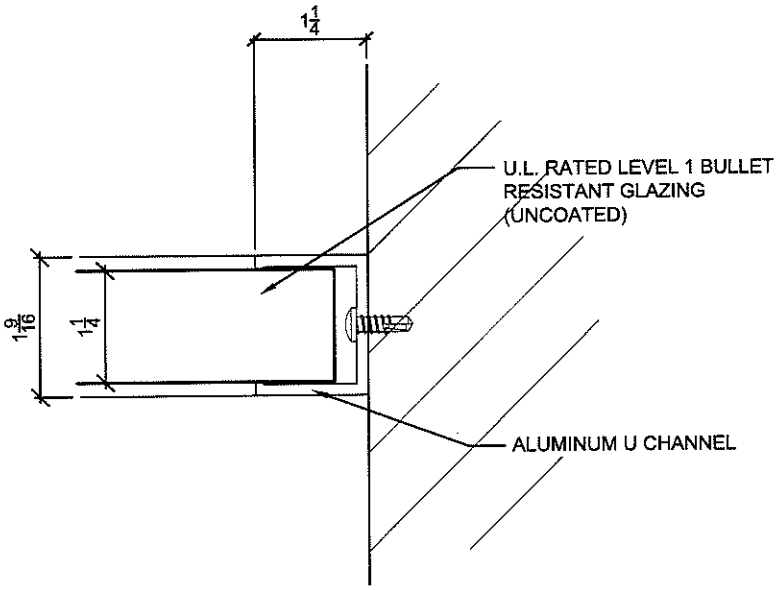

4 / A2 INSTALL DETAIL

SHEET NUMBER: A2
JOB#: 11228
SHEET TITLE: DETAILS
REVISIONS:

#	DATE	DESCRIPTION
1	08.02.16	UPDATED FROM SALES DRAWING

DATE: 07.21.16
DRAWN BY: JH
ENG. BY:
CHECKED BY:

PROJECT NAME: CITY OF CLERMONT

The information in this drawing is confidential. It is the exclusive property of TOTAL SECURITY SOLUTIONS. When permission is required for reproduction and/or distribution, written permission from TOTAL SECURITY SOLUTIONS must be obtained.

Total Security Solutions
170 National Park Drive
Fowlerville, MI 48836
Phone: 517.223.7807 Fax: 517.223.0805
www.DemandTSS.com

TOTAL SECURITY SOLUTIONS

OSCEOLA COUNTY
BOARD OF COUNTY COMMISSIONERS

Public Works – Facilities Management
1 Courthouse Square, Suite 3100 – A -- Kissimmee, Florida 34741
Phone: (407) 742-7402

ADDENDUM # 1 - Osceola Heritage Park Marquee Signs

REMINDER: This addendum must be acknowledged, signed and returned with your Bid. Failure to comply will result in disqualification of your submittal.

TO: All Bidders
FROM: Public Works – Facilities Management
SUBJECT: Osceola Heritage Park Marquee Signs
DATE: August 19, 2016

---

1. The small green diamonds on the marquee signs are to be placed in the proper angle, tightened, and painted the same color red as the top figurines.
2. The marquee sign at 192 & Bill Beck power box is to be painted the same green used on the sign.
3. The very top OHP emblem is to be painted green, covering the OHP emblem.

This addendum supersedes any verbal or other instructions given to any bidder qualified to respond pursuant to the requirements set forth in the Bid Package. All other parts have been maintained as originally distributed.

Acknowledgment is hereby made of Addendum #1 for Osceola Heritage Park Marquee Signs

---

Signature of Bidder **Date**

United States of America
TELEPHONE 575-542-8900 • FAX 575-542-8907
Reservations
www.hilton.com or 1 800 HILTONS

SUBERMAN, JEFF

PO BOX 547234

ORLANDO FL 32854
UNITED STATES OF AMERICA

Room No:	312/SXQL
Arrival Date:	8/18/2016 7:10:00 PM
Departure Date:	8/19/2016 11:27:00 AM
Adult/Child:	2/3
Cashier ID:	STEPHANIE
Room Rate:	92.12
AL:	DL 2026356978
HH #	444539881 SILVER
VAT #	
Folio No/Che	120606 A

Confirmation Number: 84857516

HAMPTON INN LORDSBURG 8/19/2016 11:27:00 AM

DATE	REF NO	DESCRIPTION	CHARGES
8/18/2016	338866	GUEST ROOM	$92.12
8/18/2016	338866	STATE TAX	$6.68
8/18/2016	338866	CITY TAX	$4.61
8/19/2016	338946	MC *1650	($103.41)
		BALANCE	$0.00

You have earned approximately 1059 Hilton HHonors points and approximately 92 Miles with Delta Air Lines for this stay. Hilton HHonors(R) stays are posted within 72 hours of checkout. To check your ea

Hampton hotels are all over the world. Find us in Canada, Costa Rica, Ecuador, Germany, India, Mexico, Poland, Turkey, United Kingdom, and United States of America. Coming soon in Italy and Romania.