STATE OF FLORIDA
DEPARTMENT OF TRANSPORTATION

PRELIMINARY PLANS

FINANCIAL PROJECT ID 410825-1-22-01

SUMTER COUNTY/LAKE COUNTY

SOUTH LAKE TRAIL PHASES III & IV
FROM APPROXIMATELY 1.3 MILES SOUTH OF THE
VAN FLEET TRAILHEAD IN SUMTER COUNTY TO THE
WESTERN TERMINUS OF SOUTH LAKE TRAIL PHASE I
AT WEST BEACH IN CLERMONT, FLORIDA.

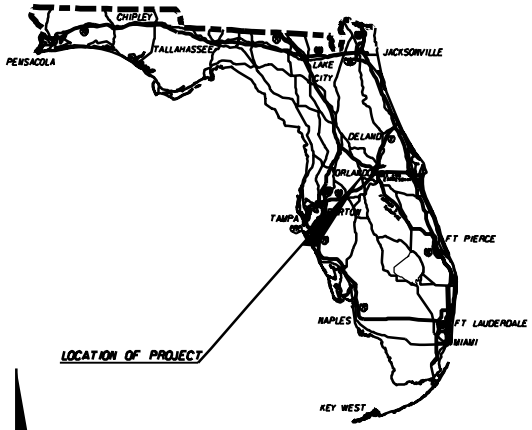

INDEX OF TRAIL PLANS

SHEET NO.	SHEET DESCRIPTION
1	KEY SHEET
2 - 4	TYPICAL SECTIONS
5 - 33	PLAN SHEET
34 - 37	SECONDARY ROUTE

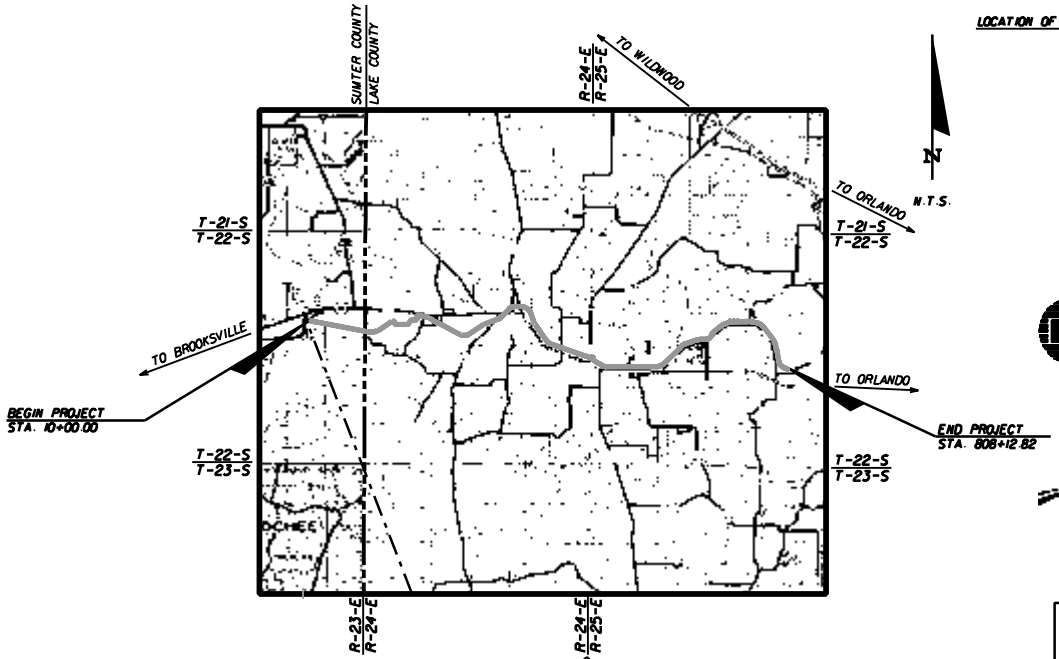

PROJECT LENGTH IS BASED ON ℄ OF CONSTRUCTION

GOVERNING STANDARDS AND SPECIFICATIONS:
FLORIDA DEPARTMENT OF TRANSPORTATION,
DESIGN STANDARDS DATED JANUARY 2004,
AND STANDARD SPECIFICATIONS FOR ROAD AND
BRIDGE CONSTRUCTION DATED 2004,
AS AMENDED BY CONTRACT DOCUMENTS.

ROADWAY SHOP DRAWINGS
TO BE SUBMITTED TO:

PLANS PREPARED BY:

KEITH and SCHNARS, P.A.
ENGINEERS · PLANNERS · SURVEYORS
385 CENTERPOINTE CIRCLE, SUITE 1303
ALTAMONTE SPRINGS, FLORIDA 32701
PHONE: (407) 834-1616
FAX: (407) 834-8530
CONTRACT NO. C-XXXX
VENDOR NO. VF 591-408-307-001
CERTIFICATE OF AUTHORIZATION NO. 1337

HORIZON
668 N ORLANDO AVENUE
SUITE 1009
MAITLAND, FL 32751
PHONE: 407-644-7755 FAX: 407-644-7855
Certificate Of Authorization No.: 00009544

NOTE: THE SCALE OF THESE PLANS MAY
HAVE CHANGED DUE TO REPRODUCTION.

PREFERRED ALIGNMENT
FEBRUARY 7, 2005

LENGTH OF PROJECT

	LINEAR FEET	MILES
ROADWAY	79,240.82	15.008
BRIDGES	572	.108
NET LENGTH OF PROJECT	79,812.82	15.116
EXCEPTIONS	N/A	N/A
GROSS LENGTH OF PROJECT	79,812.82	15.116

FDOT PROJECT MANAGER: BILL WALSH

KEY SHEET REVISIONS		
DATE	BY	DESCRIPTION

ROADWAY PLANS
ENGINEER OF RECORD: _____

P.E. NO.# _____

FISCAL YEAR	SHEET NO.
05	1

NOTES:

1) EXIST TOP OF BERM MEASURES 16'-17'.

2) ADDITIONAL FILL WILL BE REQUIRED.

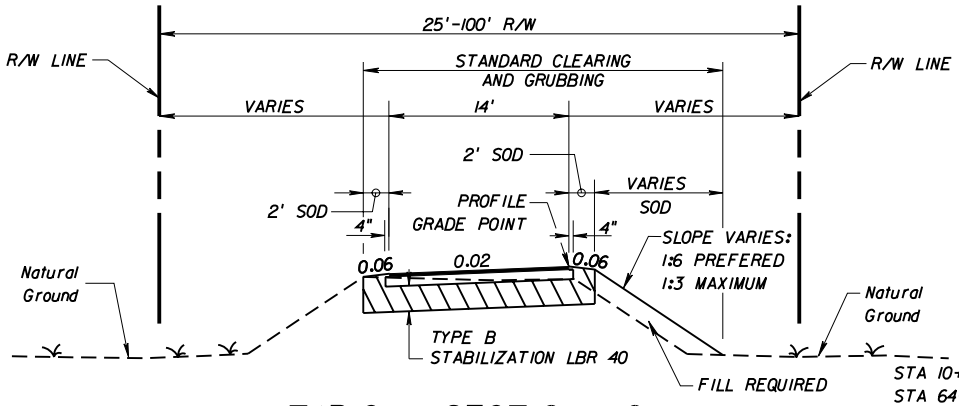

STA 10+00 TO STA 41+00
STA 64+00 TO STA 120+80
STA 181+00 TO STA 311+00
STA 321+00 TO STA 333+00
STA 343+00 TO STA 378+00
STA 754+00 TO STA 784+40
STA 786+10 TO STA 808+12.82

TYPICAL SECTION NO. 1

SOUTH LAKE TRAIL, PHASES III & IV

NOTES:

1) EXIST TOP OF BERM MEASURES 14'-15'.

2) TO MINIMIZE WETLAND IMPACTS THE TRAIL WIDTH HAS BEEN REDUCED TO 10'.

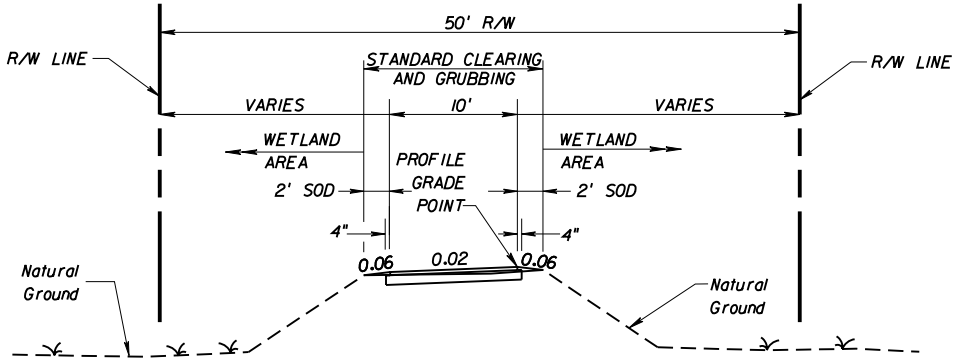

TYPICAL SECTION NO. 2

SOUTH LAKE TRAIL, PHASES III & IV

STA 41+00 TO STA 64+00

DESIGN SPEED = 20 MPH

REVISIONS					
DATE	BY	DESCRIPTION	DATE	BY	DESCRIPTION

KEITH and SCHNARS, P.A.
ENGINEERS · PLANNERS · SURVEYORS
HORIZON engineering group, inc.

STATE OF FLORIDA
DEPARTMENT OF TRANSPORTATION

ROAD NO.	COUNTY	FINANCIAL PROJECT ID
N/A	LAKE	410825-1-22-01

TYPICAL SECTIONS

SHEET NO. 2

$USER$ $DATE$ $TIME$ $FILE$

NOTES:

1) TYPICAL SECTION WHEN TRAIL LEAVES ABANDONED CSX ALIGNMENT.

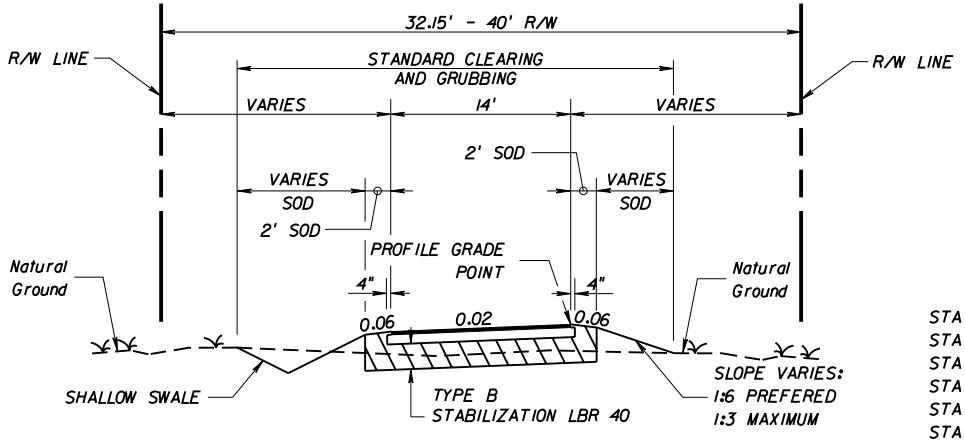

STA 120+80 TO STA 140+00
STA 311+00 TO STA 321+00
STA 333+00 TO STA 343+00
STA 398+00 TO STA 401+00
STA 402+00 TO STA 411+50
STA 426+00 TO STA 436+00
STA 477+00 TO STA 502+50
STA 633+00 TO STA 665+00
STA 729+00 TO STA 735+15
STA 746+15 TO STA 754+00

TYPICAL SECTION NO. 3

SOUTH LAKE TRAIL, PHASES III & IV

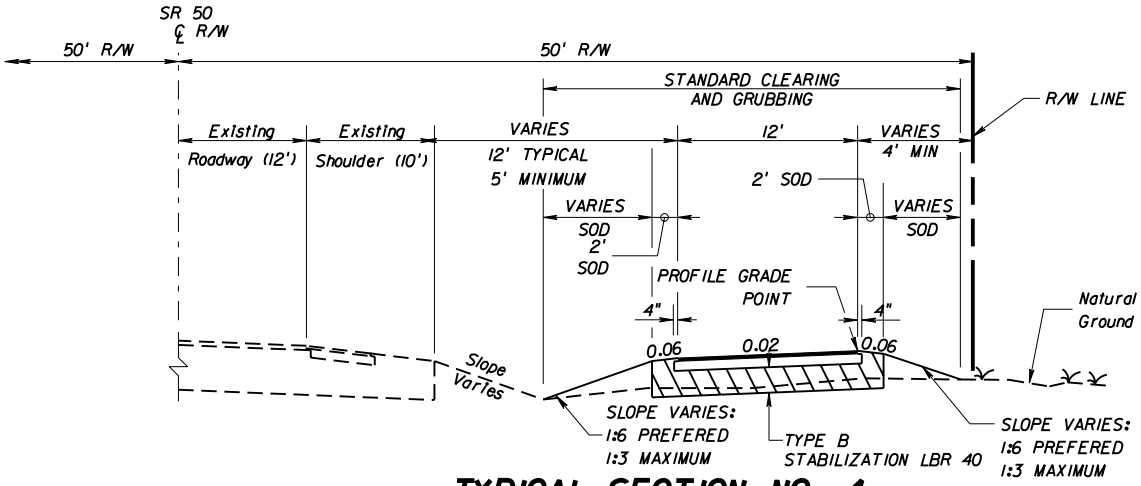

TYPICAL SECTION NO. 4

STA 140+00 TO STA 181+00

DESIGN SPEED = 20 MPH

SOUTH LAKE TRAIL, PHASES III & IV

REVISIONS					
DATE	BY	DESCRIPTION	DATE	BY	DESCRIPTION

KEITH and SCHNARS, P.A. ENGINEERS · PLANNERS · SURVEYORS
HORIZON engineering group, inc.

STATE OF FLORIDA DEPARTMENT OF TRANSPORTATION

ROAD NO.	COUNTY	FINANCIAL PROJECT ID
N/A	LAKE	410825-1-22-01

TYPICAL SECTIONS

SHEET NO. 3

$USER$ $DATE$ $TIME$ $FILE$

NOTES:

1) EXIST TOP OF BERM MEASURES 11'.

2) ADDITIONAL FILL WILL BE REQUIRED.

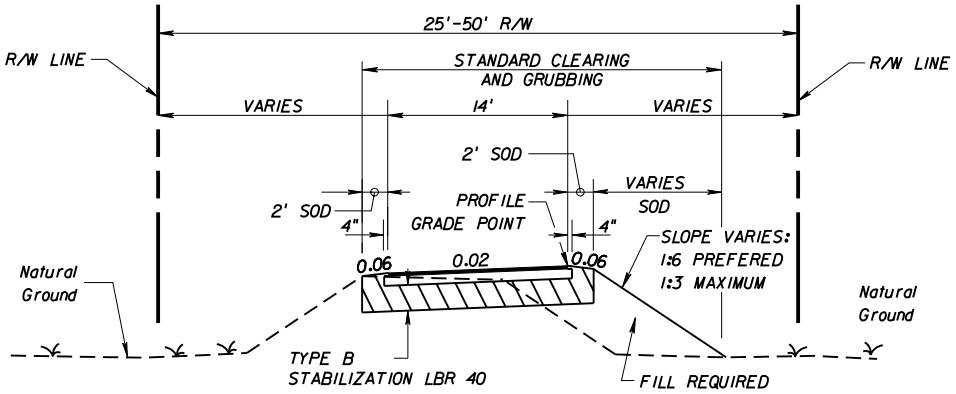

TYPICAL SECTION NO. 5

SOUTH LAKE TRAIL, PHASES III & IV

STA 378+00 TO STA 398+00
STA 414+50 TO STA 426+00
STA 436+00 TO STA 477+00
STA 502+50 TO STA 633+00
STA 665+00 TO STA 729+00

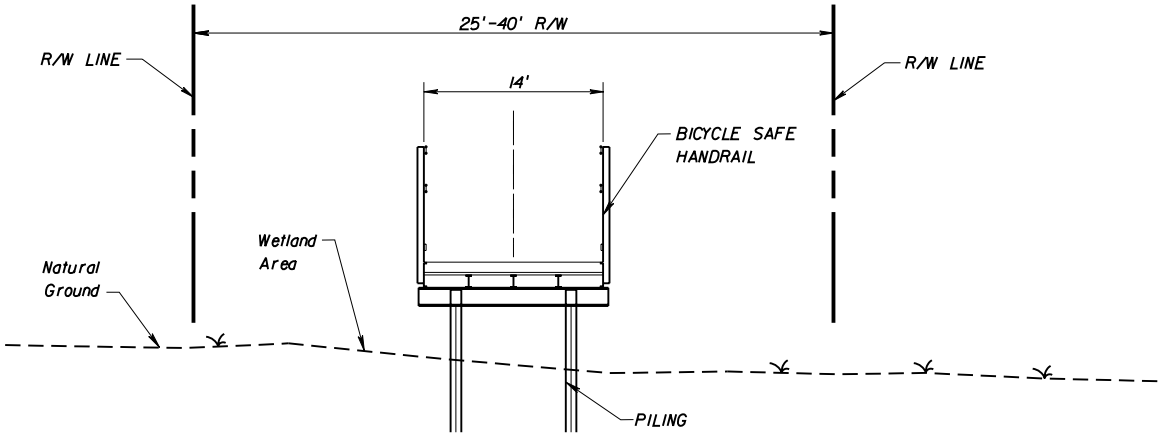

TYPICAL SECTION (BOARDWALK) NO. 6

SOUTH LAKE TRAIL, PHASES III & IV

STA 401+00 TO STA 402+00
STA 411+50 TO STA 414+50
STA 735+15 TO STA 746+15

DESIGN SPEED = 20 MPH

REVISIONS					
DATE	BY	DESCRIPTION	DATE	BY	DESCRIPTION

KEITH and SCHNARS, P.A.
ENGINEERS · PLANNERS · SURVEYORS
HORIZON engineering group, inc.

STATE OF FLORIDA
DEPARTMENT OF TRANSPORTATION

ROAD NO.	COUNTY	FINANCIAL PROJECT ID
N/A	LAKE	410825-1-22-01

TYPICAL SECTIONS

SHEET NO. 4

$USER$ $DATE$ $TIME$ $FILE$

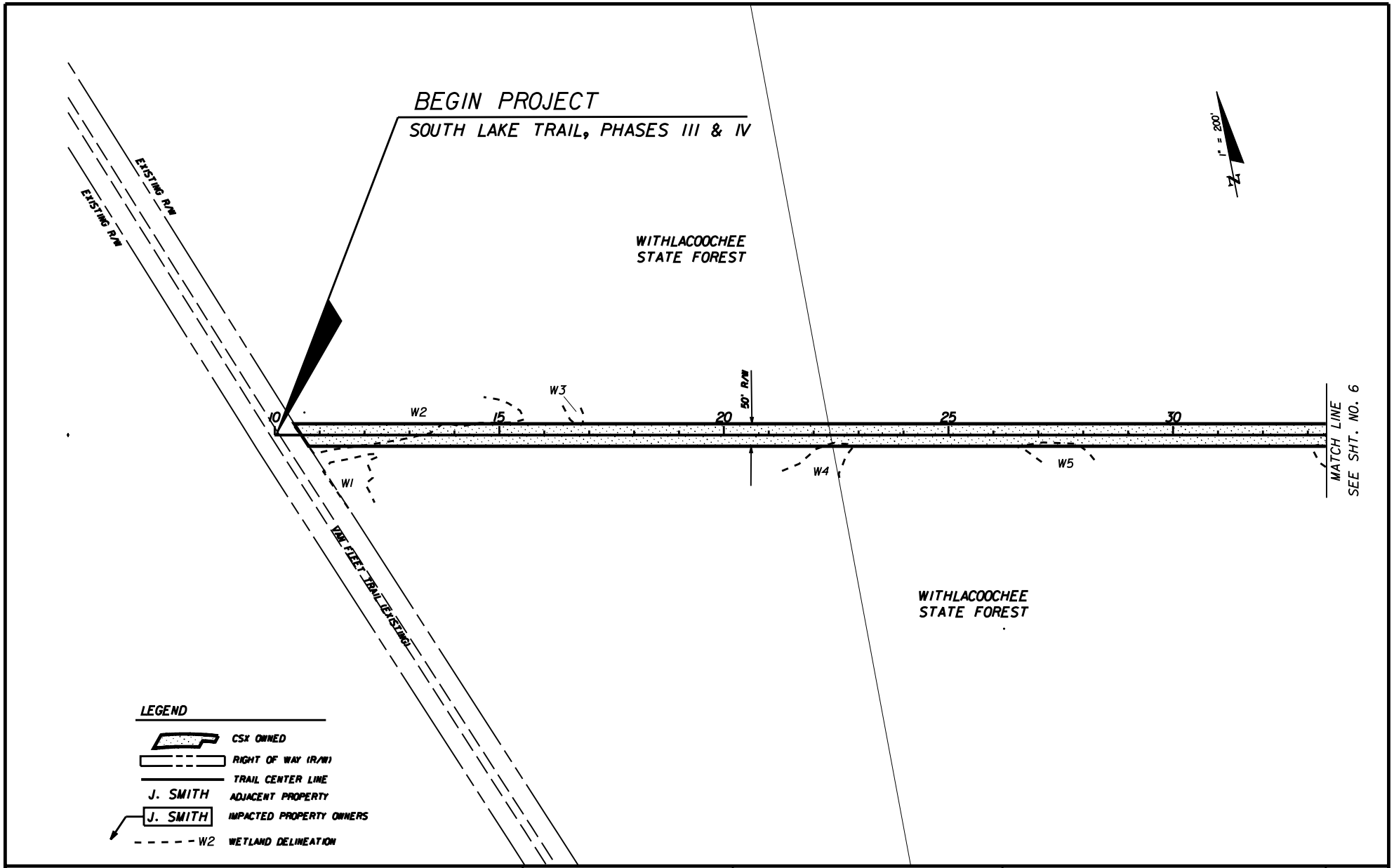

REVISIONS					
DATE	BY	DESCRIPTION	DATE	BY	DESCRIPTION

KEITH and SCHNARS, P.A.
ENGINEERS · PLANNERS · SURVEYORS
HORIZON engineering group, inc.

STATE OF FLORIDA
DEPARTMENT OF TRANSPORTATION

ROAD NO.	COUNTY	FINANCIAL PROJECT ID
N/A	SUMTER	410825-1-22-01

SOUTH LAKE TRAIL
PLAN SHEET

SHEET NO. 5

$USER$ $DATE$ $TIME$ $FILE$

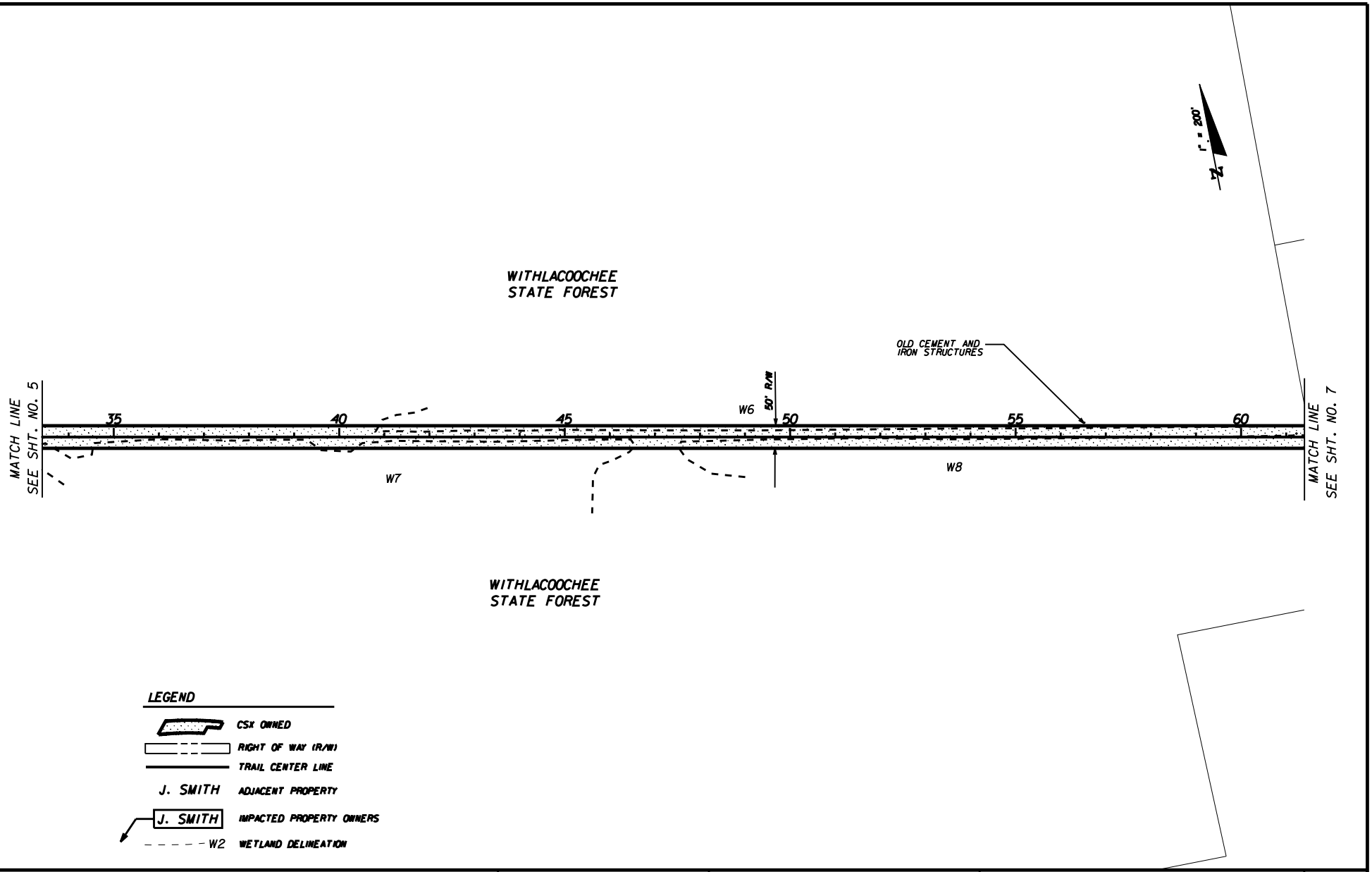

REVISIONS					
DATE	BY	DESCRIPTION	DATE	BY	DESCRIPTION

KEITH and SCHNARS, P.A.
ENGINEERS · PLANNERS · SURVEYORS
HORIZON engineering group, Inc.

STATE OF FLORIDA
DEPARTMENT OF TRANSPORTATION

ROAD NO.	COUNTY	FINANCIAL PROJECT ID
N/A	SUMTER	410825-1-22-01

SOUTH LAKE TRAIL PLAN SHEET

SHEET NO. 6

$USER$ $DATE$ $TIME$ $FILE$

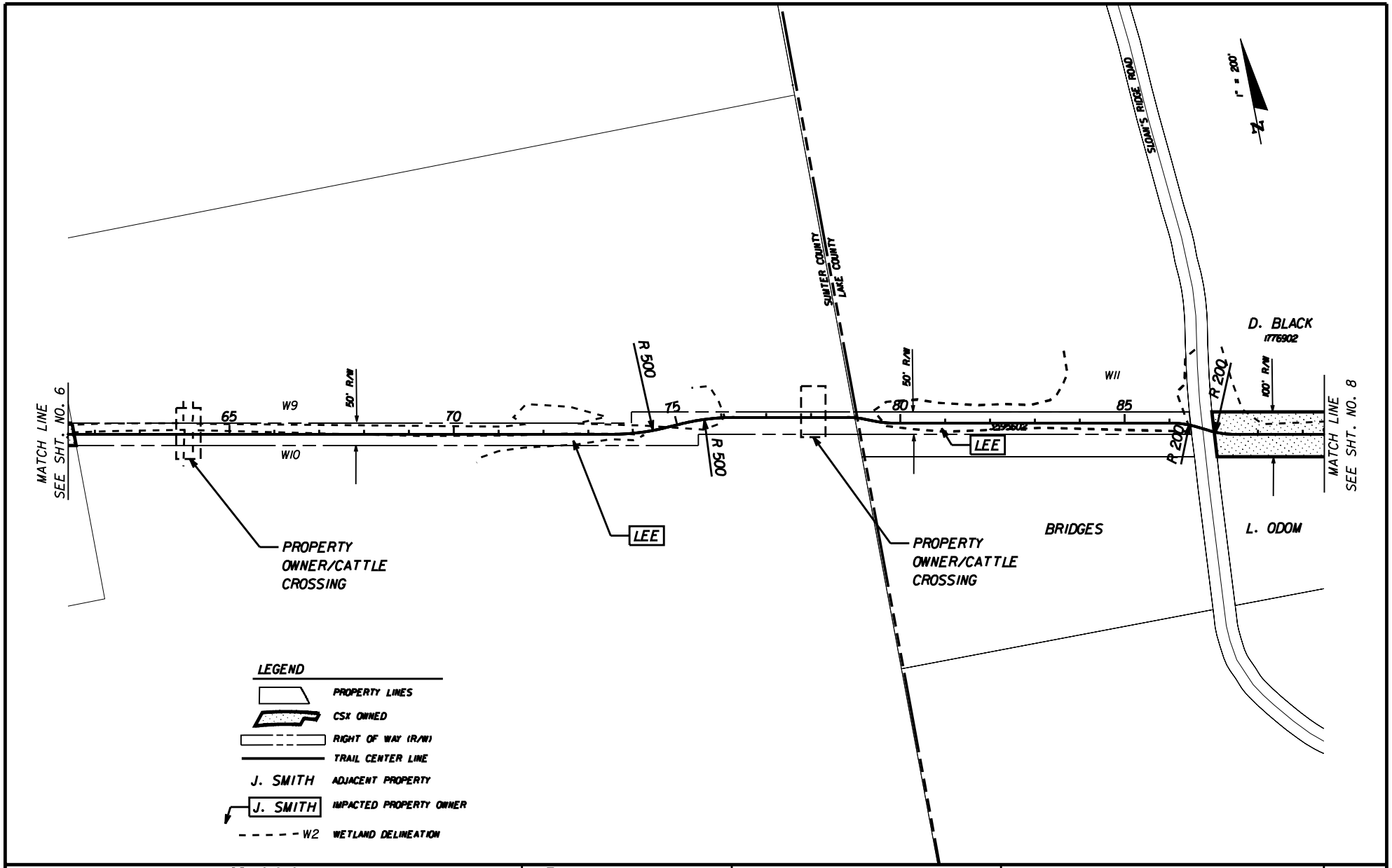

REVISIONS					
DATE	BY	DESCRIPTION	DATE	BY	DESCRIPTION

KEITH and SCHNARS, P.A.
ENGINEERS · PLANNERS · SURVEYORS
HORIZON engineering group, inc.

STATE OF FLORIDA
DEPARTMENT OF TRANSPORTATION

ROAD NO.	COUNTY	FINANCIAL PROJECT ID
N/A	LAKE	410825-1-22-01

SOUTH LAKE TRAIL
PLAN SHEET

SHEET NO. 7

$USER$ $DATE$ $TIME$ $FILE$

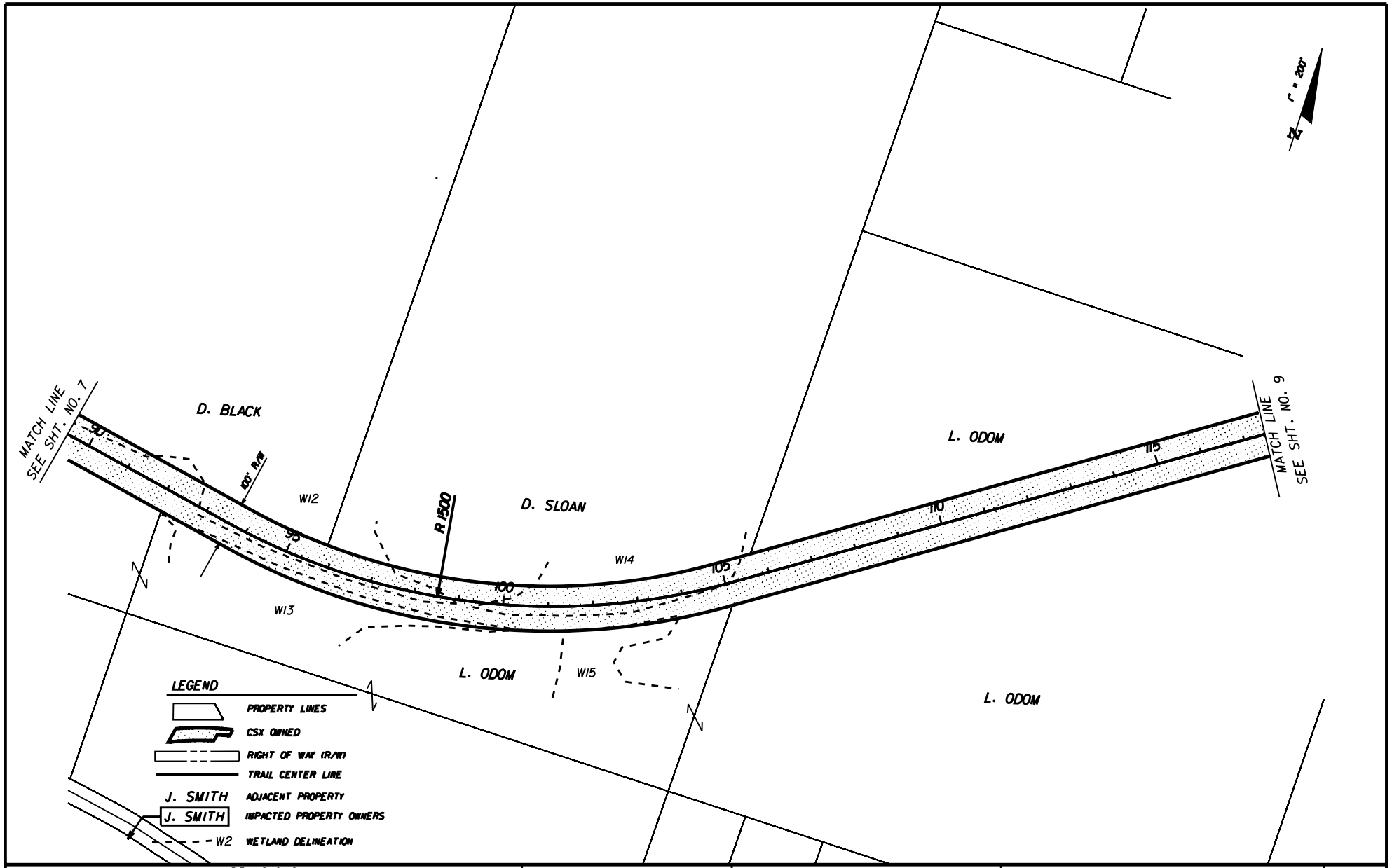

REVISIONS					
DATE	BY	DESCRIPTION	DATE	BY	DESCRIPTION

KEITH and SCHNARS, P.A.
ENGINEERS · PLANNERS · SURVEYORS
HORIZON engineering group, inc.

STATE OF FLORIDA
DEPARTMENT OF TRANSPORTATION

ROAD NO.	COUNTY	FINANCIAL PROJECT ID
N/A	LAKE	410825-1-22-01

SOUTH LAKE TRAIL
PLAN SHEET

SHEET NO. 8

$USER$ $DATE$ $TIME$ $FILE$

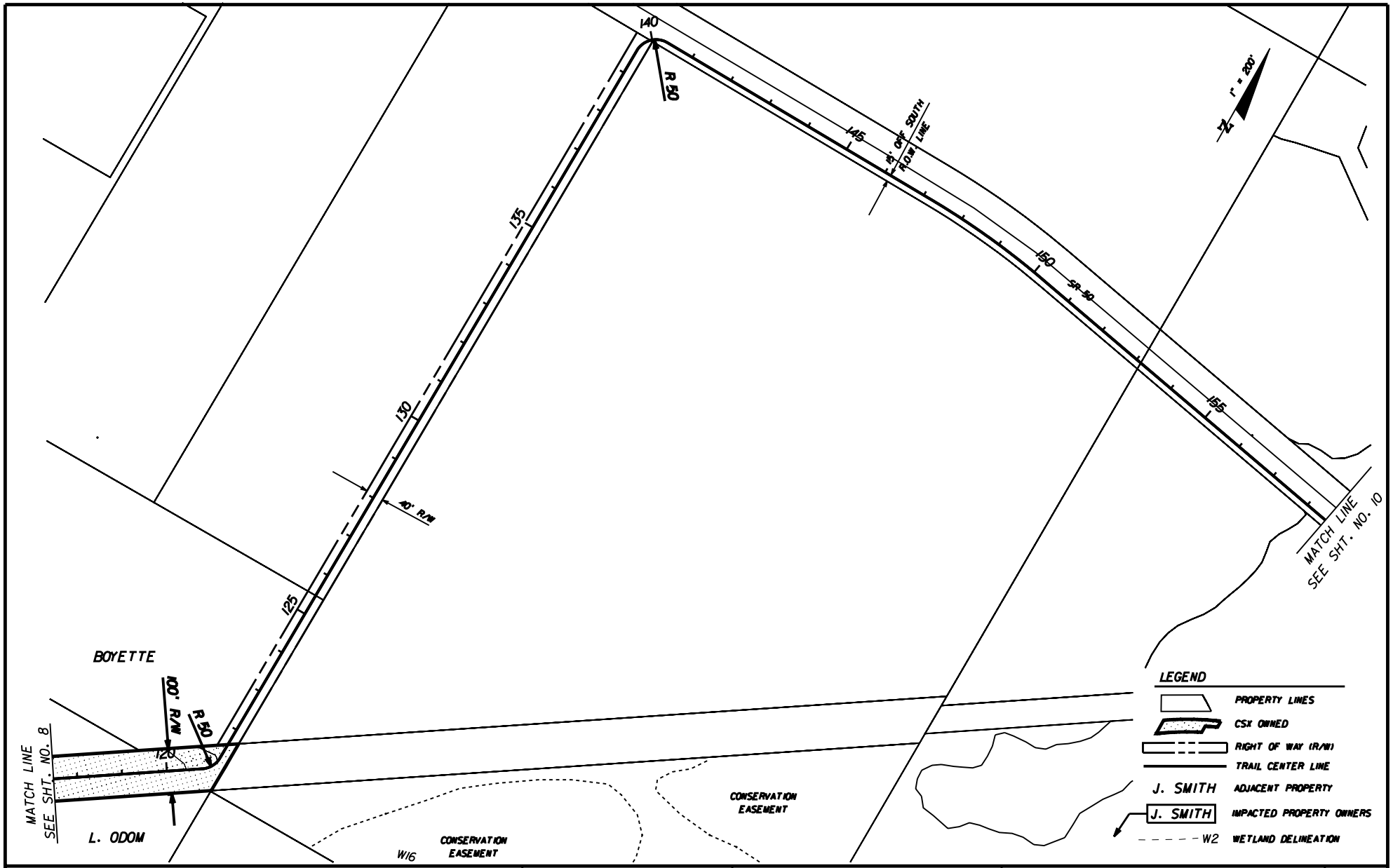

REVISIONS					
DATE	BY	DESCRIPTION	DATE	BY	DESCRIPTION

KEITH and SCHNARS, P.A.
ENGINEERS · PLANNERS · SURVEYORS
HORIZON engineering group, inc.

STATE OF FLORIDA
DEPARTMENT OF TRANSPORTATION

ROAD NO.	COUNTY	FINANCIAL PROJECT ID
N/A	LAKE	410825-1-22-01

SOUTH LAKE TRAIL
PLAN SHEET

SHEET NO. 9

$USER$ $DATE$ $TIME$ $FILE$

REVISIONS					
DATE	BY	DESCRIPTION	DATE	BY	DESCRIPTION

KEITH and SCHNARS, P.A.
ENGINEERS · PLANNERS · SURVEYORS
HORIZON engineering group, Inc.

STATE OF FLORIDA
DEPARTMENT OF TRANSPORTATION

ROAD NO.	COUNTY	FINANCIAL PROJECT ID
N/A	LAKE	410825-1-22-01

SOUTH LAKE TRAIL
PLAN SHEET

SHEET NO. 10

$USER$ $DATE$ $TIME$ $FILE$

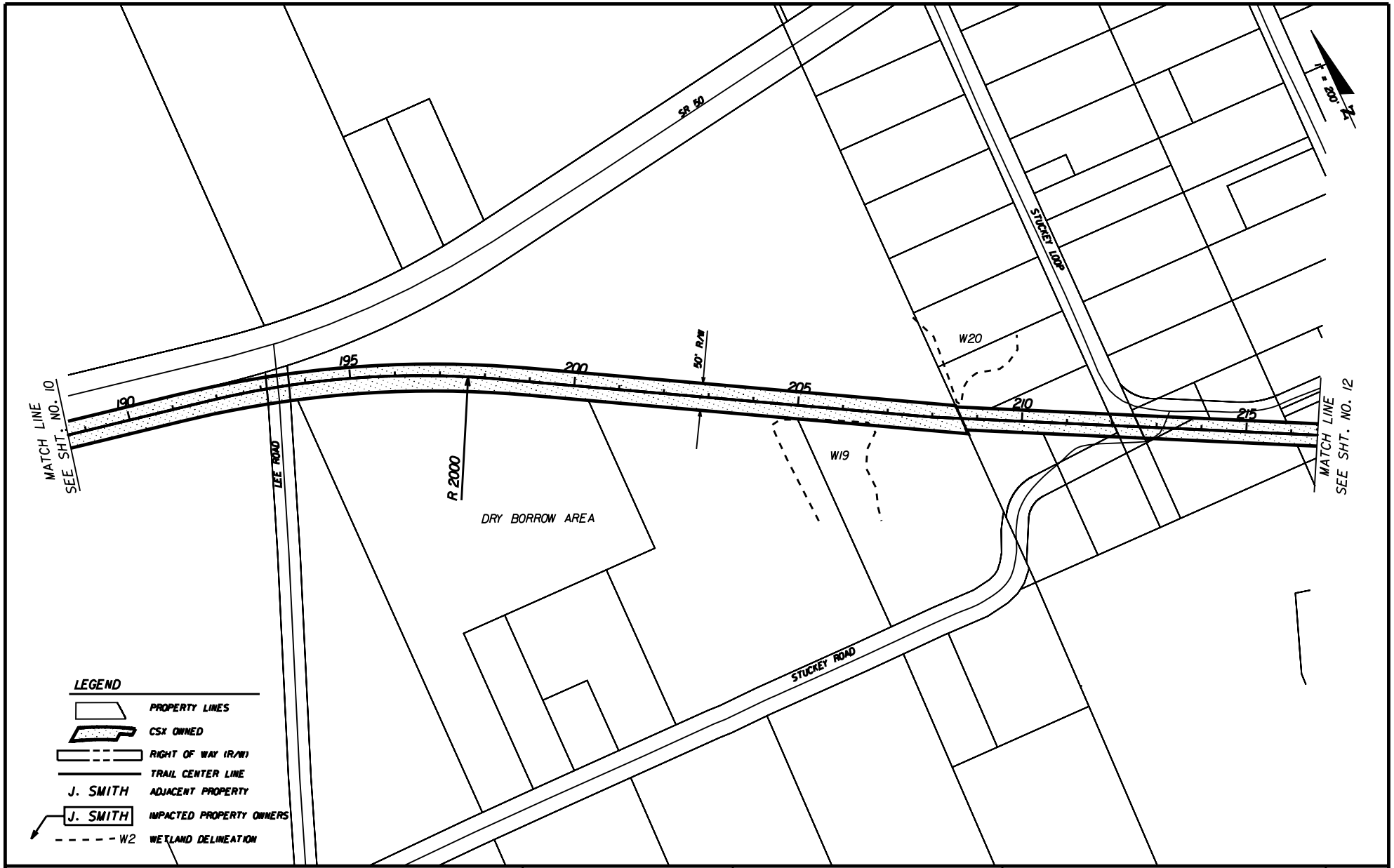

REVISIONS					
DATE	BY	DESCRIPTION	DATE	BY	DESCRIPTION

KEITH and SCHNARS, P.A.
ENGINEERS · PLANNERS · SURVEYORS
HORIZON engineering group, inc.

STATE OF FLORIDA
DEPARTMENT OF TRANSPORTATION

ROAD NO.	COUNTY	FINANCIAL PROJECT ID
N/A	LAKE	410825-1-22-01

SOUTH LAKE TRAIL
PLAN SHEET

SHEET NO. 11

$USER$ $DATE$ $TIME$ $FILE$

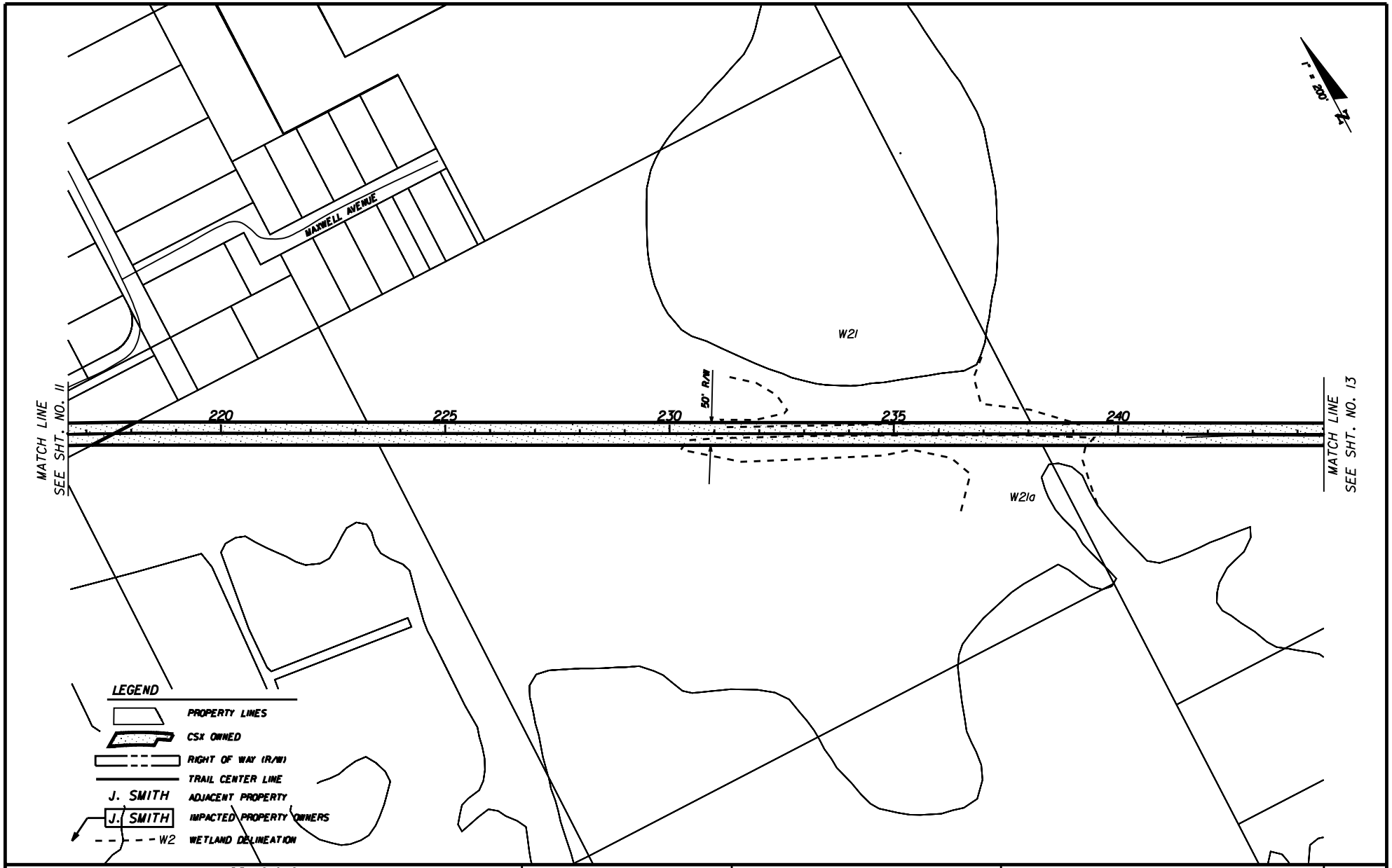

REVISIONS					
DATE	BY	DESCRIPTION	DATE	BY	DESCRIPTION

KEITH and SCHNARS, P.A.
ENGINEERS · PLANNERS · SURVEYORS
HORIZON engineering group, inc.

STATE OF FLORIDA
DEPARTMENT OF TRANSPORTATION

ROAD NO.	COUNTY	FINANCIAL PROJECT ID
N/A	LAKE	410825-1-22-01

SOUTH LAKE TRAIL
PLAN SHEET

SHEET NO. 12

$USER$ $DATE$ $TIME$ $FILE$

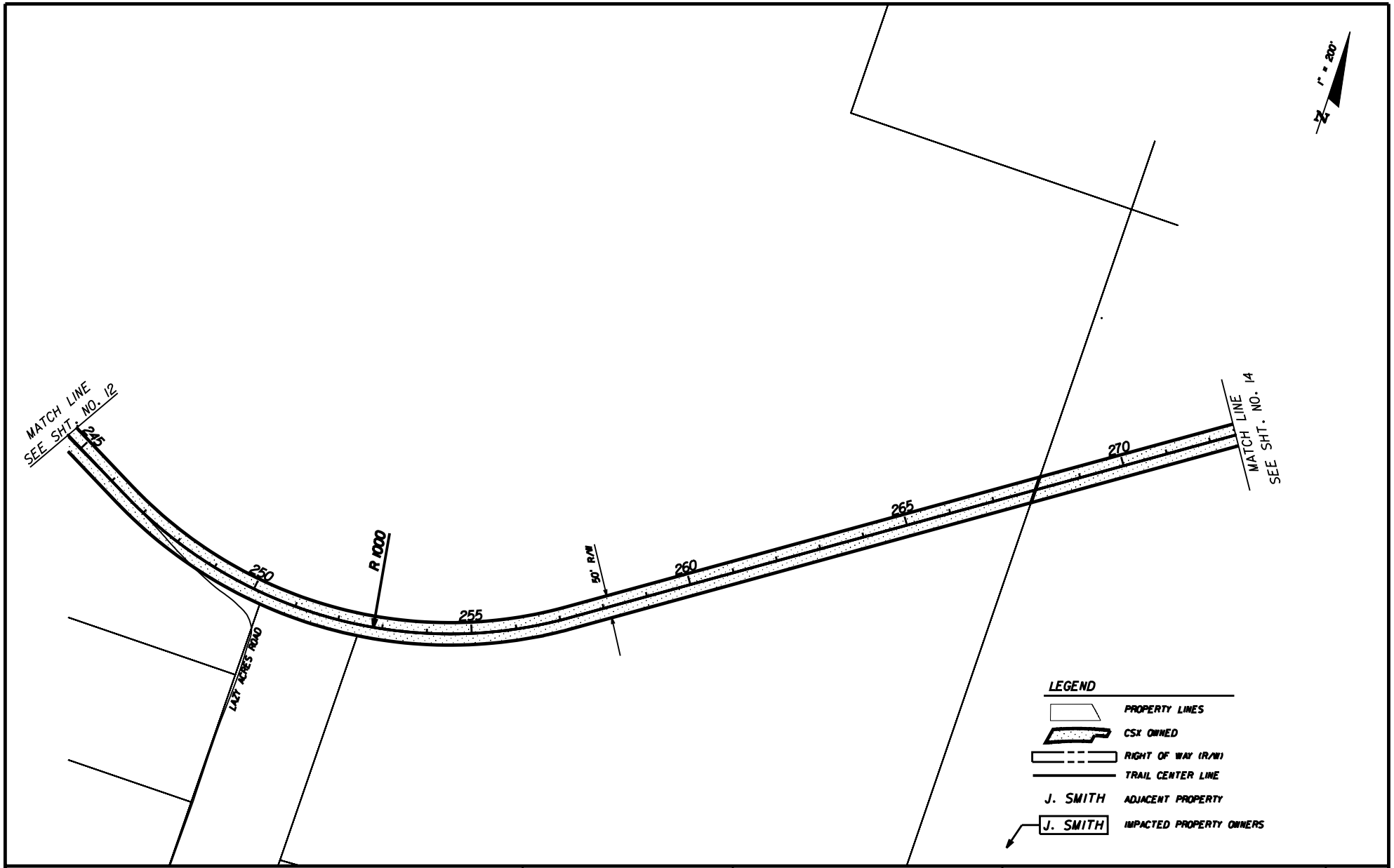

REVISIONS					
DATE	BY	DESCRIPTION	DATE	BY	DESCRIPTION

KEITH and SCHNARS, P.A.
ENGINEERS · PLANNERS · SURVEYORS
HORIZON engineering group, inc.

STATE OF FLORIDA
DEPARTMENT OF TRANSPORTATION

ROAD NO.	COUNTY	FINANCIAL PROJECT ID
N/A	LAKE	410825-1-22-01

SOUTH LAKE TRAIL
PLAN SHEET

SHEET NO. 13

$USER$ $DATE$ $TIME$ $FILE$

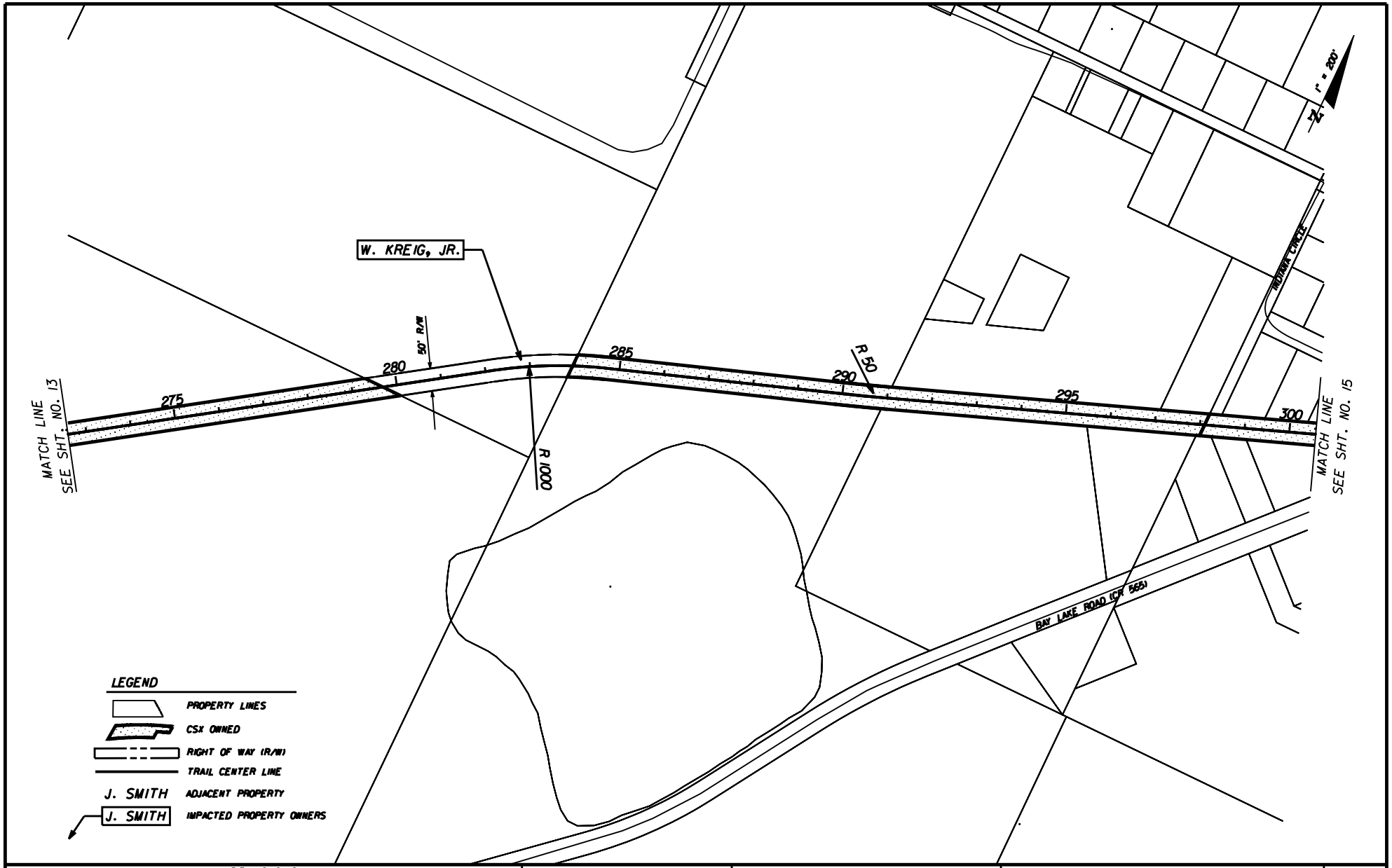

REVISIONS					
DATE	BY	DESCRIPTION	DATE	BY	DESCRIPTION

KEITH and SCHNARS, P.A.
ENGINEERS · PLANNERS · SURVEYORS
HORIZON engineering group, inc.

STATE OF FLORIDA
DEPARTMENT OF TRANSPORTATION

ROAD NO.	COUNTY	FINANCIAL PROJECT ID
N/A	LAKE	410825-1-22-01

SOUTH LAKE TRAIL
PLAN SHEET

SHEET NO. 14

$USER$ $DATE$ $TIME$ $FILE$

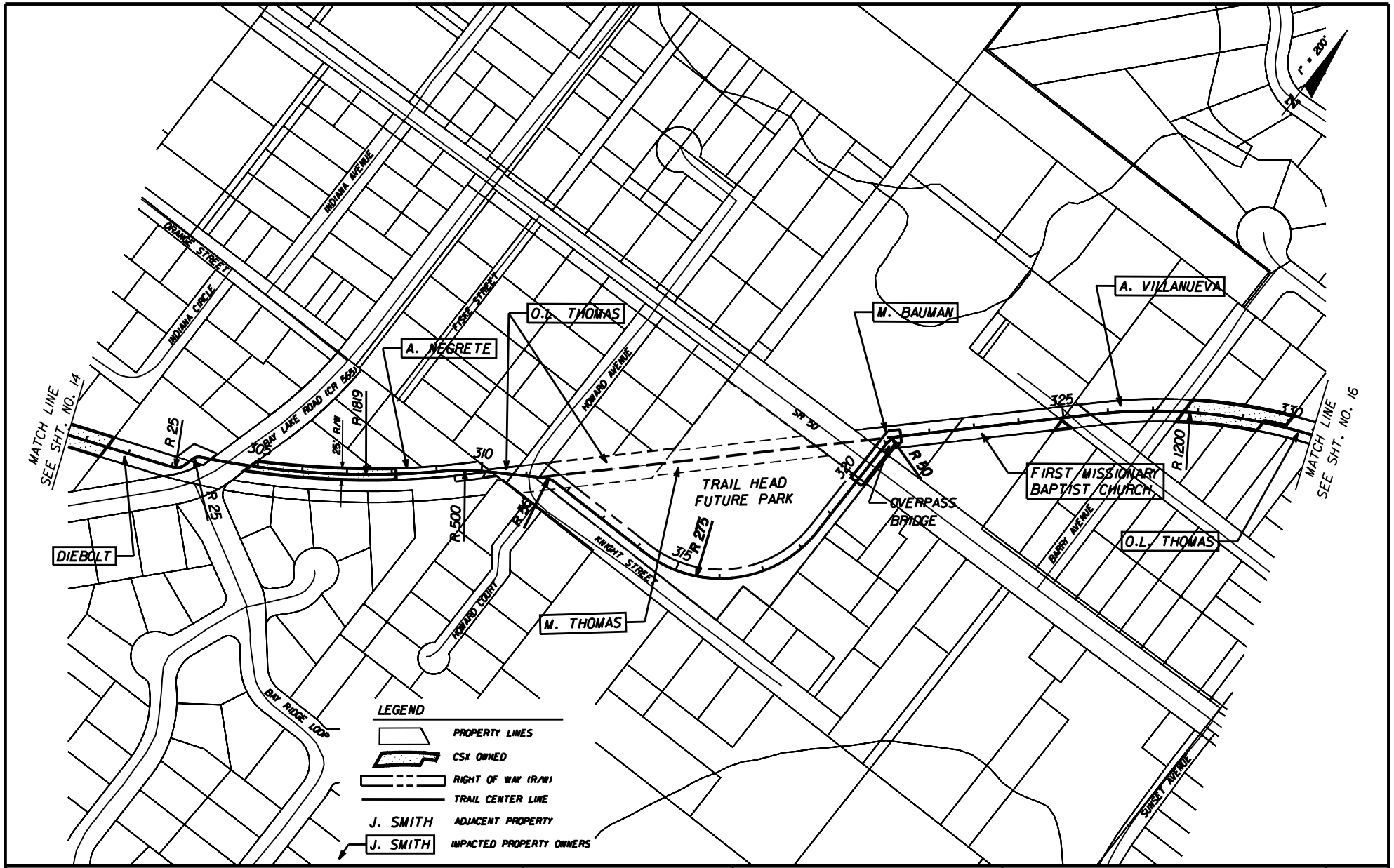

REVISIONS					
DATE	BY	DESCRIPTION	DATE	BY	DESCRIPTION

KEITH and SCHNARS, P.A.
ENGINEERS · PLANNERS · SURVEYORS
HORIZON engineering group, inc.

STATE OF FLORIDA
DEPARTMENT OF TRANSPORTATION

ROAD NO.	COUNTY	FINANCIAL PROJECT ID
N/A	LAKE	410825-1-22-01

SOUTH LAKE TRAIL
PLAN SHEET

SHEET NO. 15

$USER$ $DATE$ $TIME$ $FILE$

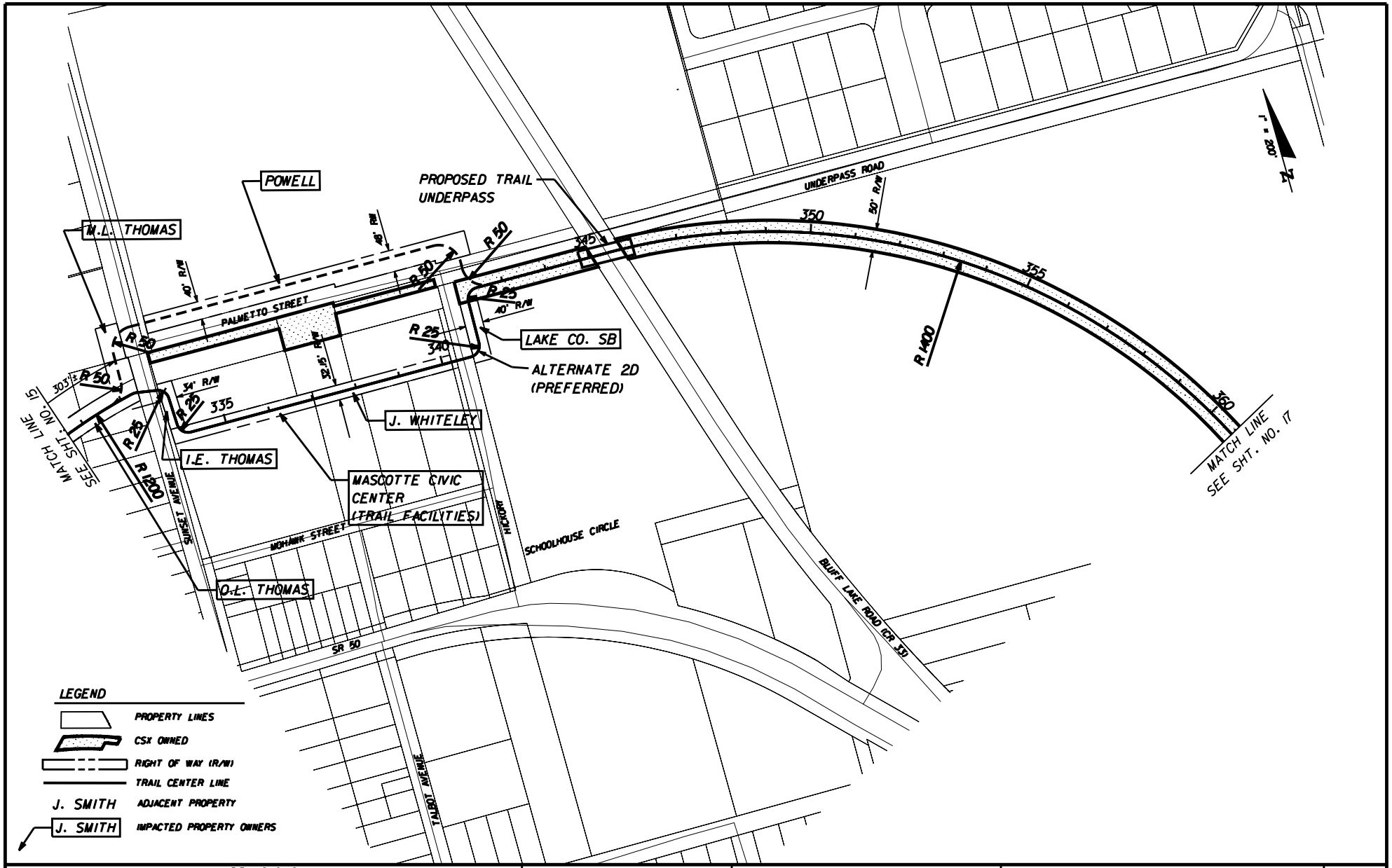

REVISIONS					
DATE	BY	DESCRIPTION	DATE	BY	DESCRIPTION

KEITH and SCHNARS, P.A.
ENGINEERS · PLANNERS · SURVEYORS
HORIZON engineering group, inc.

STATE OF FLORIDA
DEPARTMENT OF TRANSPORTATION

ROAD NO.	COUNTY	FINANCIAL PROJECT ID
N/A	LAKE	410825-1-22-01

SOUTH LAKE TRAIL
PLAN SHEET

SHEET NO. 16

$USER$ $DATE$ $TIME$ $FILE$

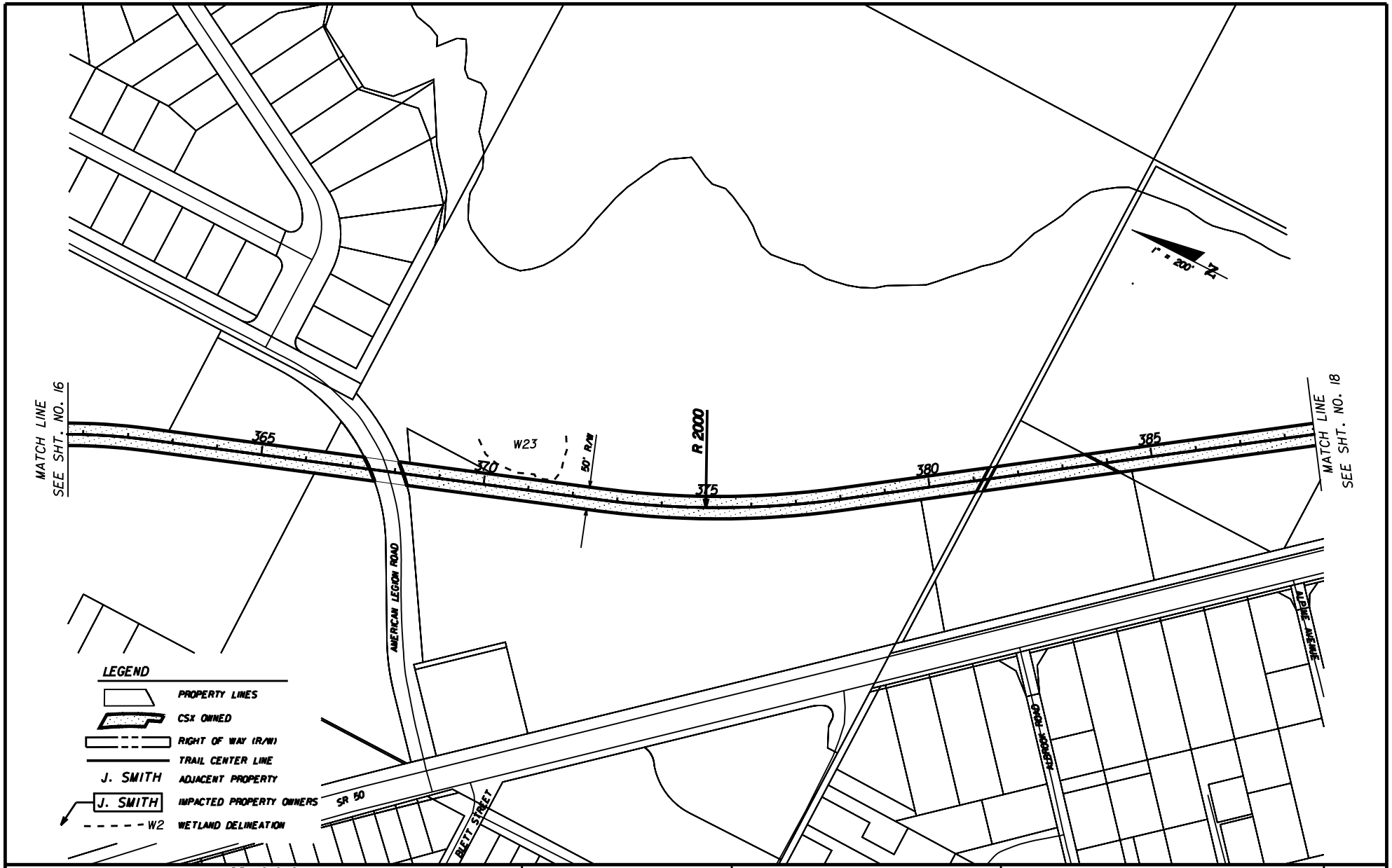

REVISIONS					
DATE	BY	DESCRIPTION	DATE	BY	DESCRIPTION

KEITH and SCHNARS, P.A.
ENGINEERS · PLANNERS · SURVEYORS
HORIZON engineering group, inc.

STATE OF FLORIDA
DEPARTMENT OF TRANSPORTATION

ROAD NO.	COUNTY	FINANCIAL PROJECT ID
N/A	LAKE	410825-1-22-01

SOUTH LAKE TRAIL
PLAN SHEET

SHEET NO. 17

$USER$ $DATE$ $TIME$ $FILE$

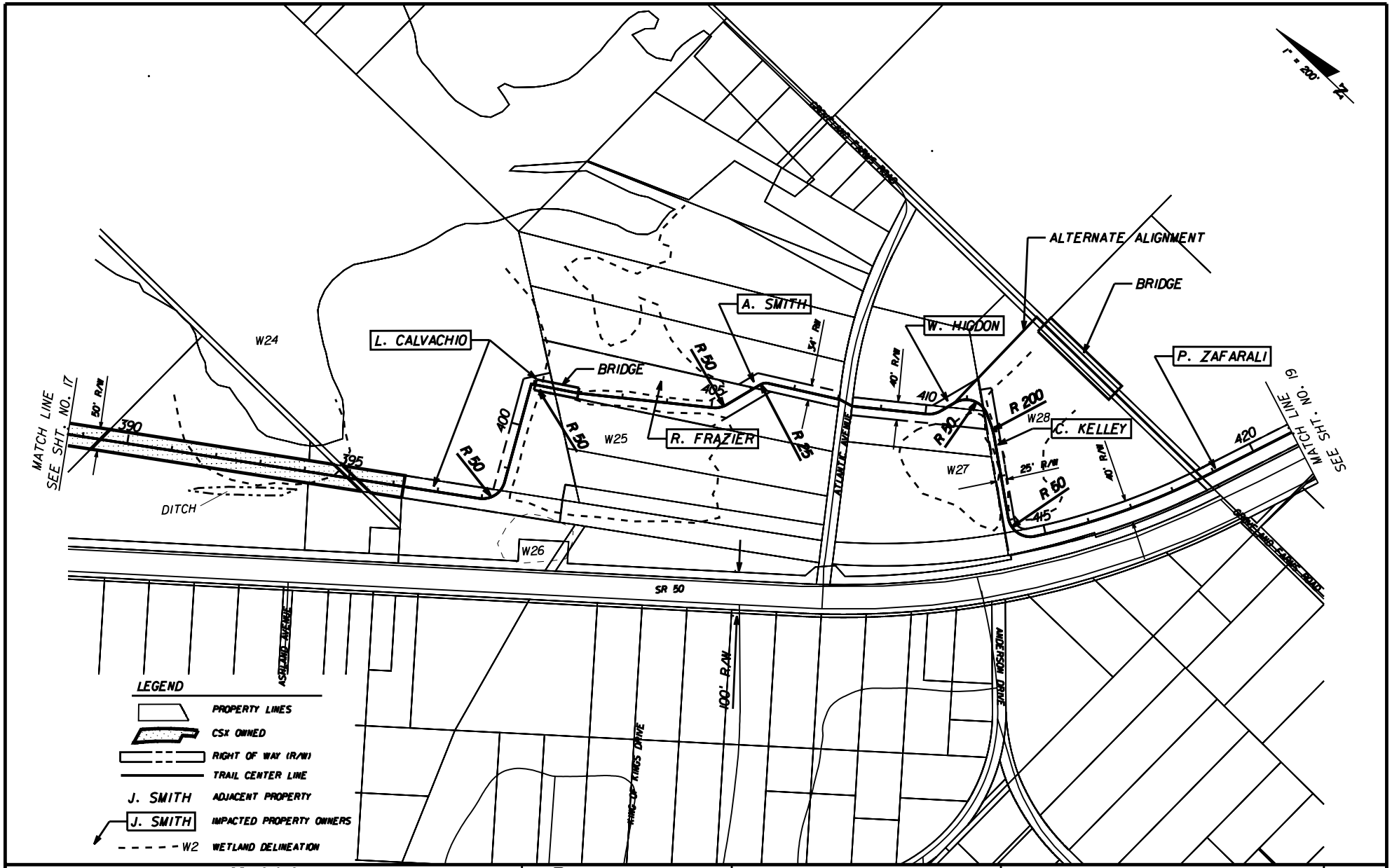

REVISIONS					
DATE	BY	DESCRIPTION	DATE	BY	DESCRIPTION

KEITH and SCHNARS, P.A.
ENGINEERS · PLANNERS · SURVEYORS
HORIZON engineering group, inc.

STATE OF FLORIDA
DEPARTMENT OF TRANSPORTATION

ROAD NO.	COUNTY	FINANCIAL PROJECT ID
N/A	LAKE	410825-1-22-01

SOUTH LAKE TRAIL
PLAN SHEET

SHEET NO. 18

$USER$ $DATE$ $TIME$ $FILE$

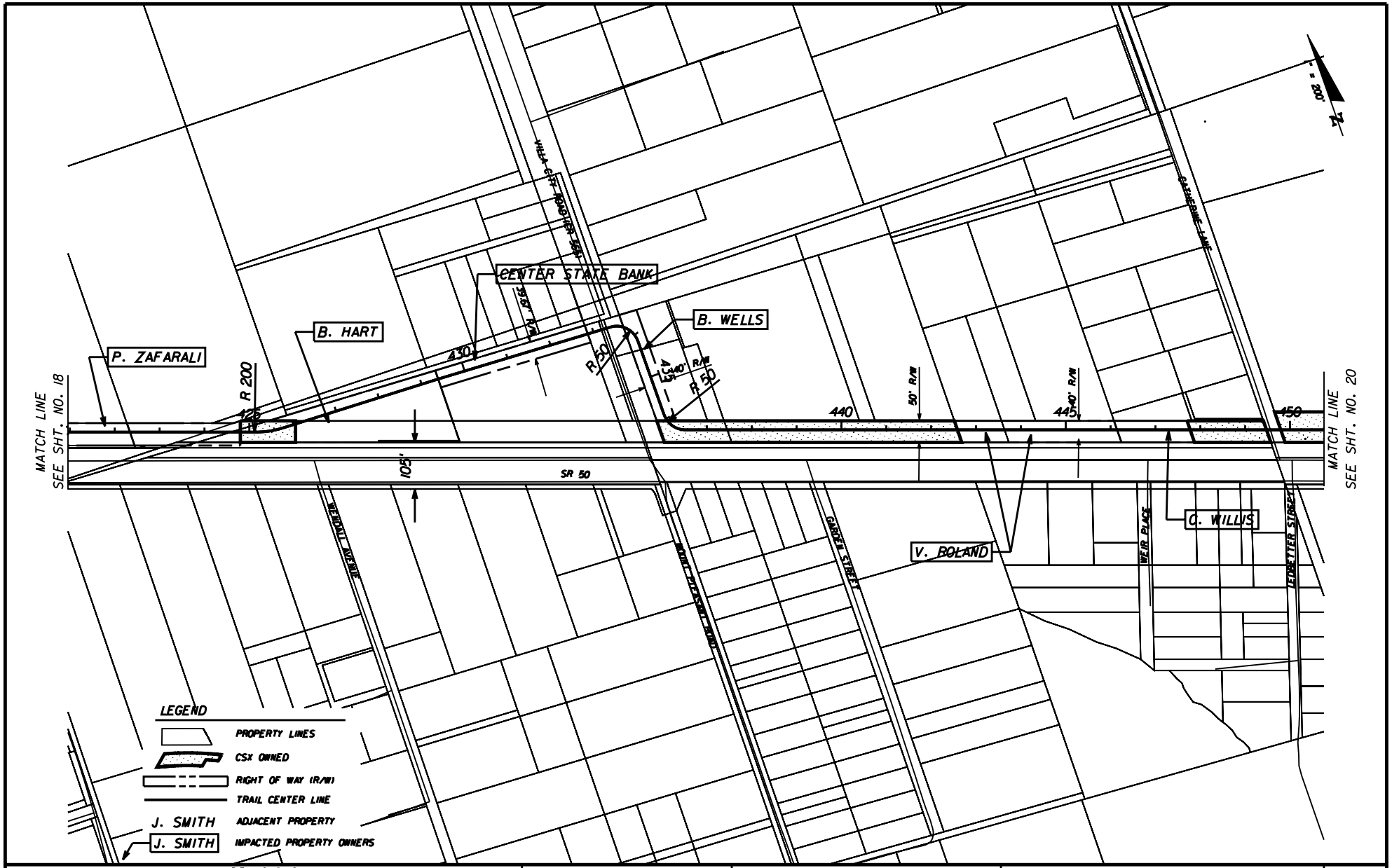

REVISIONS

DATE	BY	DESCRIPTION	DATE	BY	DESCRIPTION

KEITH and SCHNARS, P.A.
ENGINEERS · PLANNERS · SURVEYORS
HORIZON engineering group, inc.

STATE OF FLORIDA
DEPARTMENT OF TRANSPORTATION

ROAD NO.	COUNTY	FINANCIAL PROJECT ID
N/A	LAKE	410825-1-22-01

SOUTH LAKE TRAIL
PLAN SHEET

SHEET NO. 19

$USER$ $DATE$ $TIME$ $FILE$

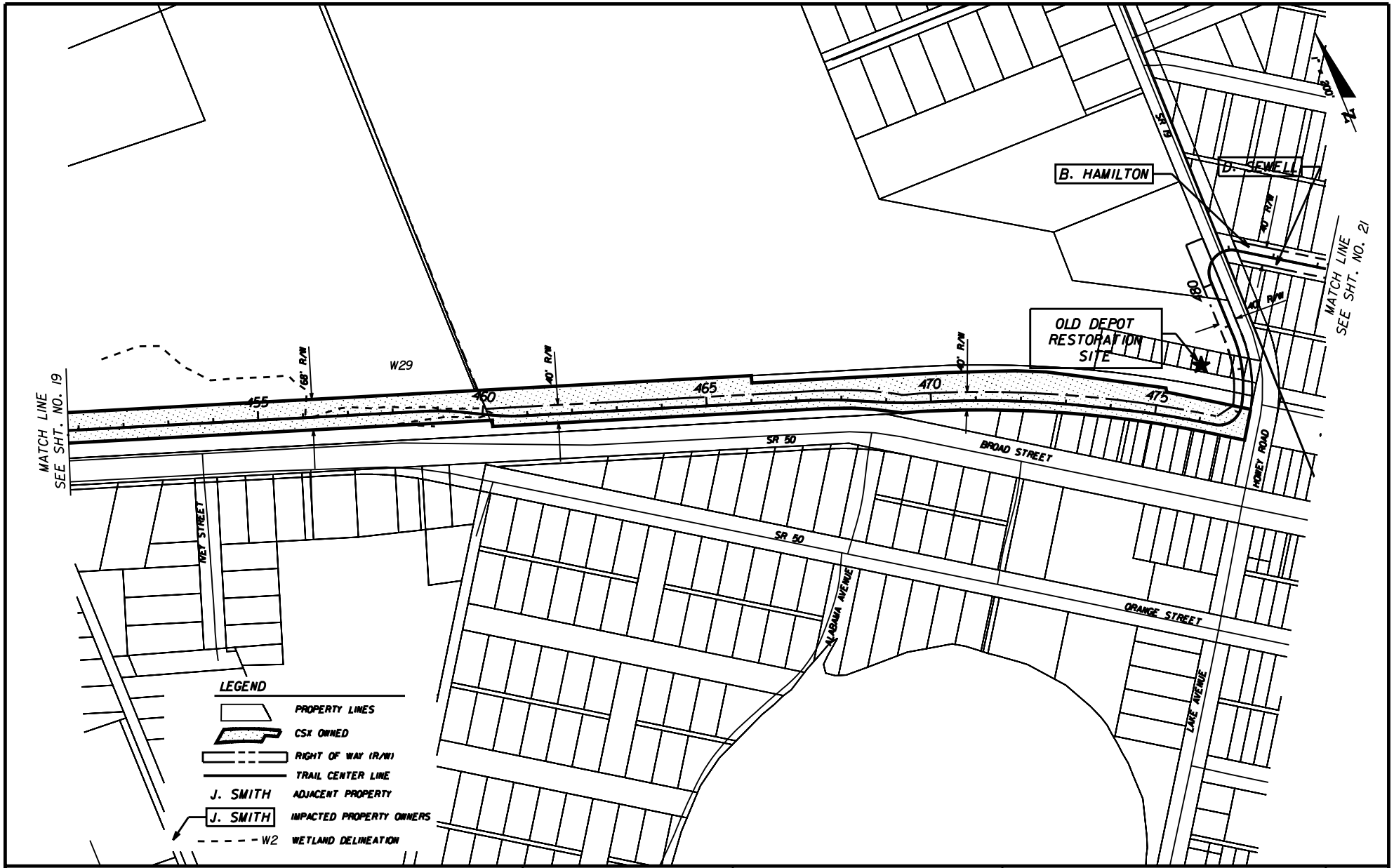

REVISIONS					
DATE	BY	DESCRIPTION	DATE	BY	DESCRIPTION

KEITH and SCHNARS, P.A.
ENGINEERS · PLANNERS · SURVEYORS
HORIZON engineering group, inc.

STATE OF FLORIDA
DEPARTMENT OF TRANSPORTATION

ROAD NO.	COUNTY	FINANCIAL PROJECT ID
N/A	LAKE	410825-1-22-01

SOUTH LAKE TRAIL
PLAN SHEET

SHEET NO. 20

$USER$ $DATE$ $TIME$ $FILE$

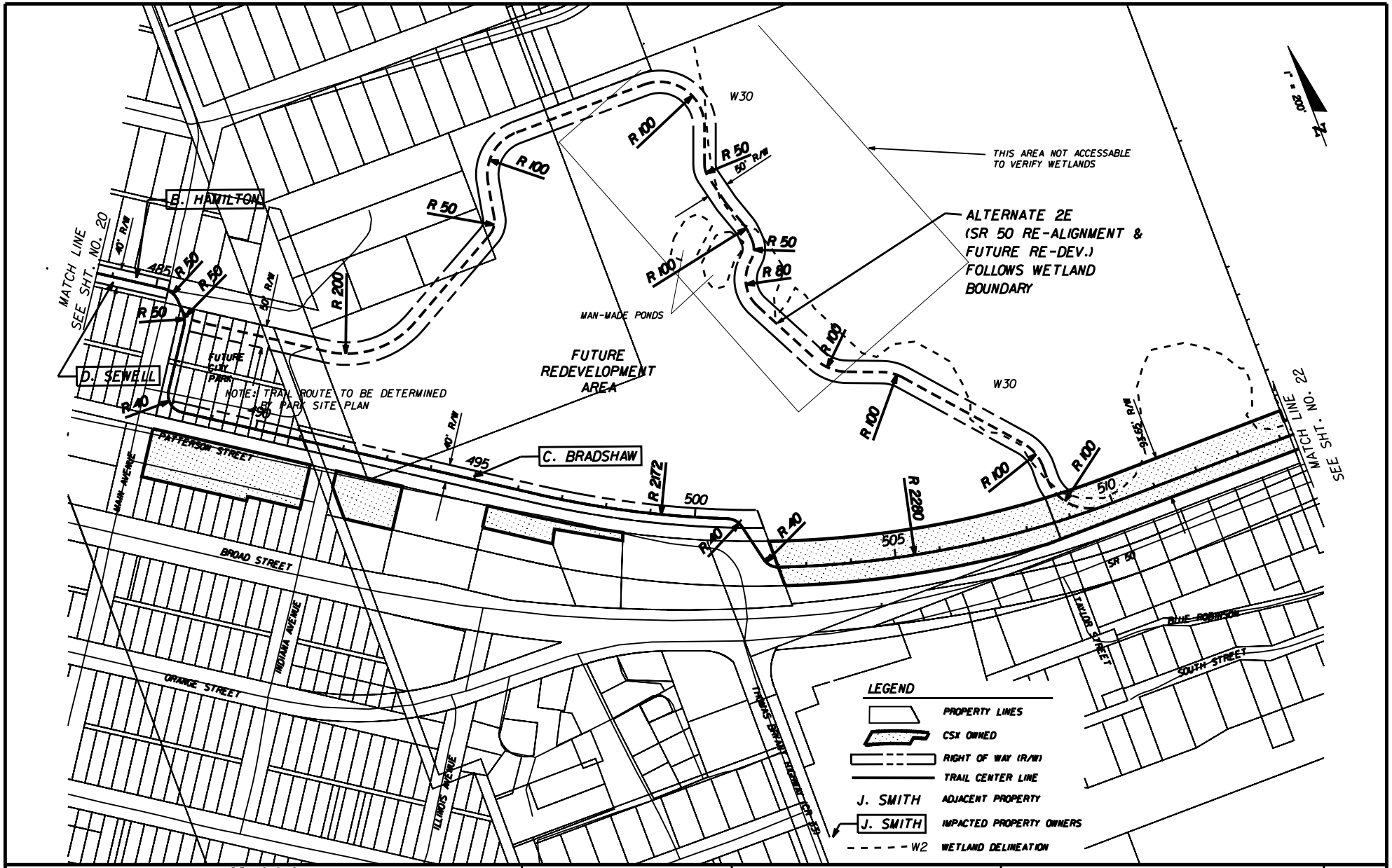

REVISIONS					
DATE	BY	DESCRIPTION	DATE	BY	DESCRIPTION

KEITH and SCHNARS, P.A.
ENGINEERS · PLANNERS · SURVEYORS
HORIZON engineering group, inc.

STATE OF FLORIDA
DEPARTMENT OF TRANSPORTATION

ROAD NO.	COUNTY	FINANCIAL PROJECT ID
N/A	LAKE	410825-1-22-01

SOUTH LAKE TRAIL
PLAN SHEET

SHEET NO. 21

$USER$ $DATE$ $TIME$ $FILE$

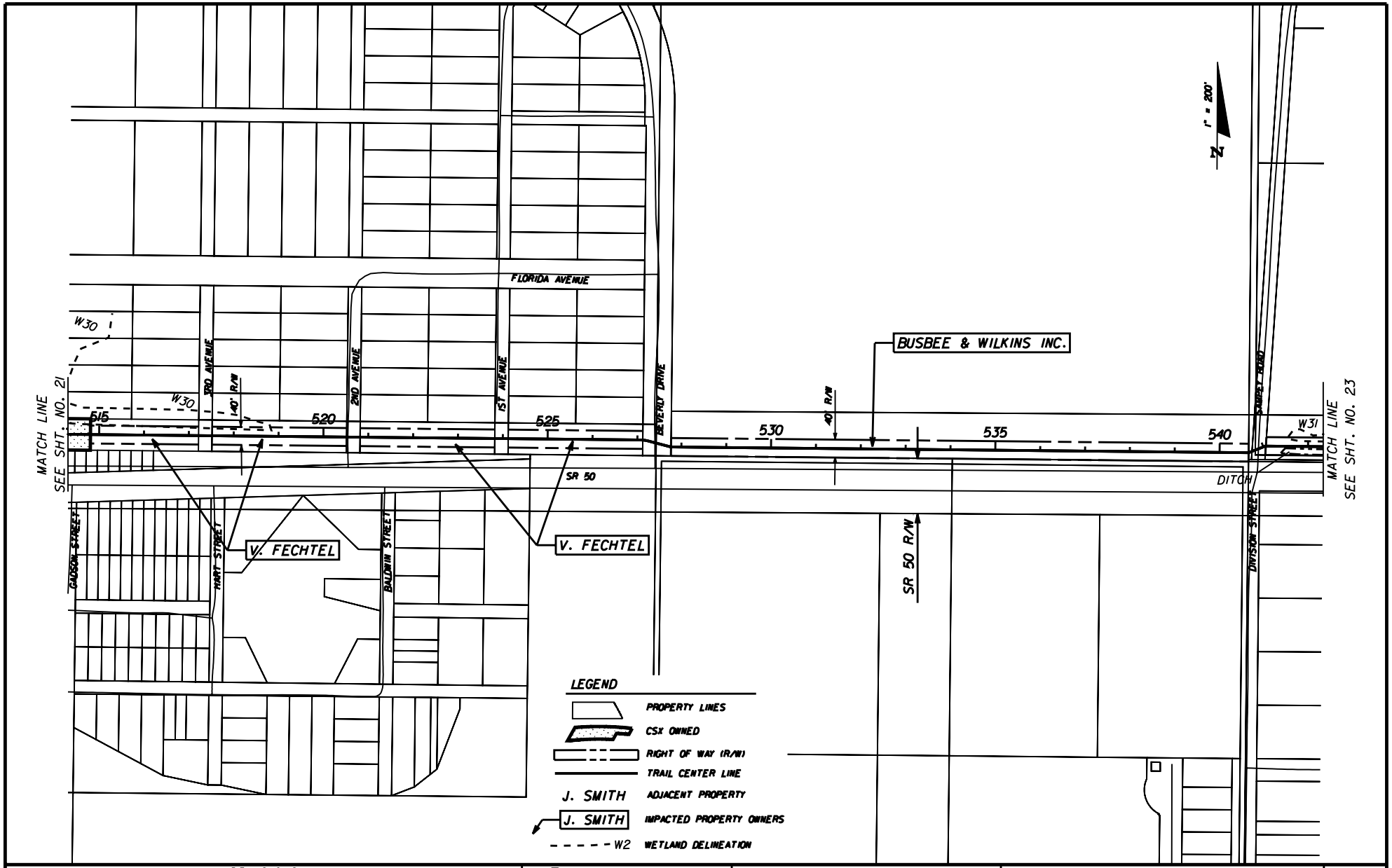

REVISIONS					
DATE	BY	DESCRIPTION	DATE	BY	DESCRIPTION

KEITH and SCHNARS, P.A.
ENGINEERS · PLANNERS · SURVEYORS
HORIZON engineering group, inc.

STATE OF FLORIDA
DEPARTMENT OF TRANSPORTATION

ROAD NO.	COUNTY	FINANCIAL PROJECT ID
N/A	LAKE	410825-1-22-01

SOUTH LAKE TRAIL
PLAN SHEET

SHEET NO. 22

$USER$ $DATE$ $TIME$ $FILE$

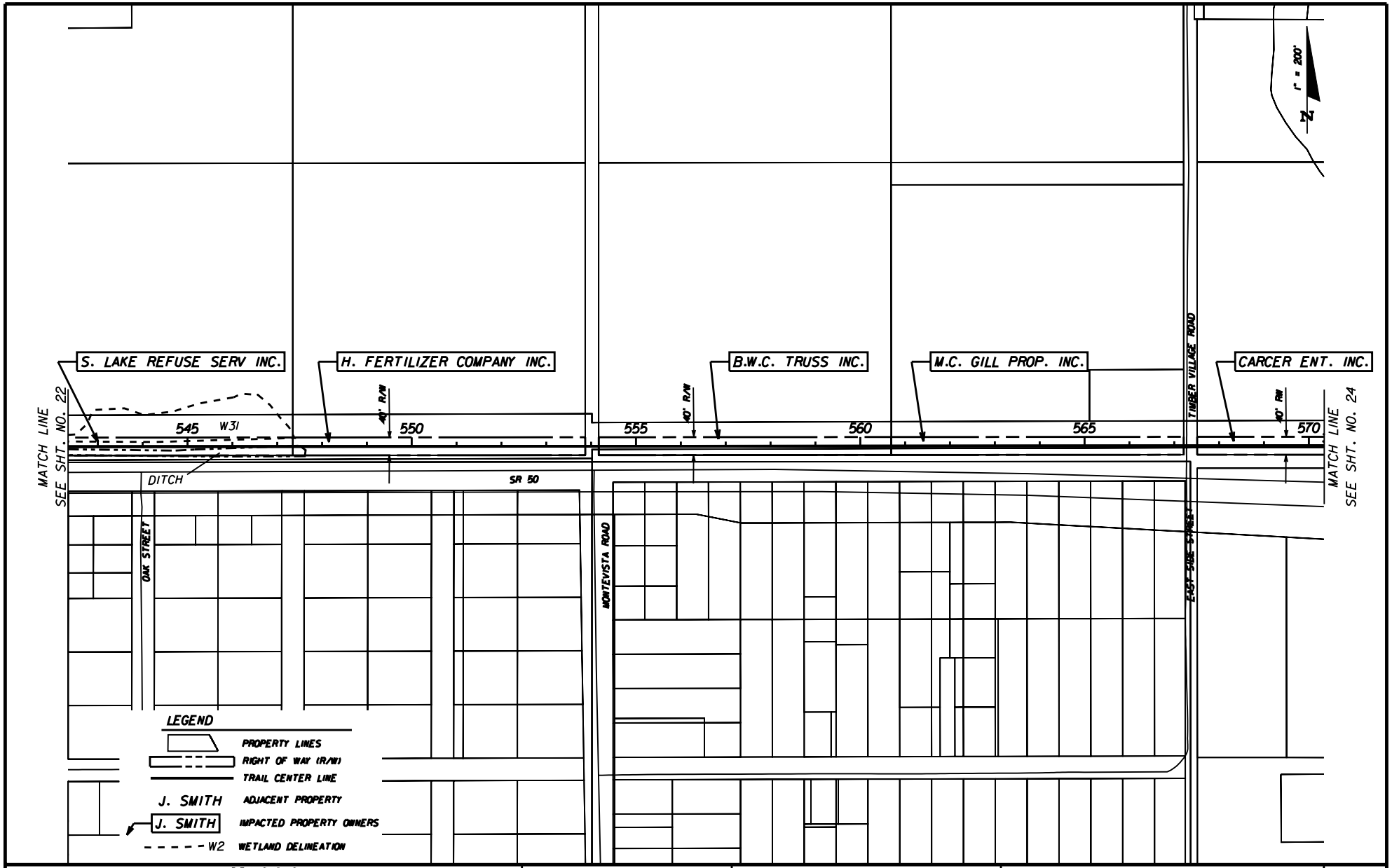

REVISIONS					
DATE	BY	DESCRIPTION	DATE	BY	DESCRIPTION

KEITH and SCHNARS, P.A.
ENGINEERS · PLANNERS · SURVEYORS
HORIZON engineering group, inc.

STATE OF FLORIDA
DEPARTMENT OF TRANSPORTATION

ROAD NO.	COUNTY	FINANCIAL PROJECT ID
N/A	LAKE	410825-1-22-01

SOUTH LAKE TRAIL
PLAN SHEET

SHEET NO. 23

$USER$ $DATE$ $TIME$ $FILE$

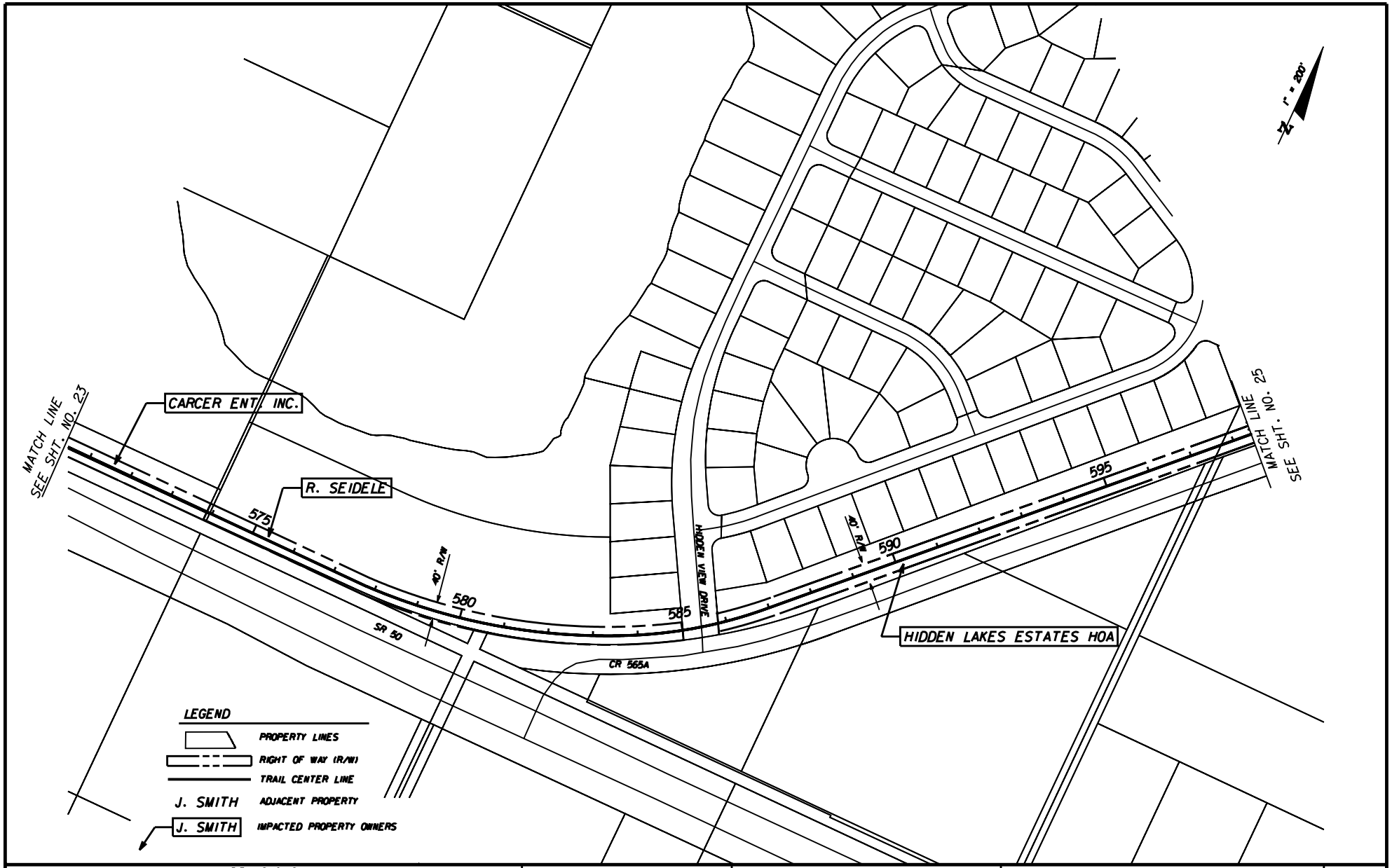

REVISIONS					
DATE	BY	DESCRIPTION	DATE	BY	DESCRIPTION

KEITH and SCHNARS, P.A.
ENGINEERS · PLANNERS · SURVEYORS
HORIZON engineering group, inc.

STATE OF FLORIDA
DEPARTMENT OF TRANSPORTATION

ROAD NO.	COUNTY	FINANCIAL PROJECT ID
N/A	LAKE	410825-1-22-01

SOUTH LAKE TRAIL
PLAN SHEET

SHEET NO. 24

$USER$ $DATE$ $TIME$ $FILE$

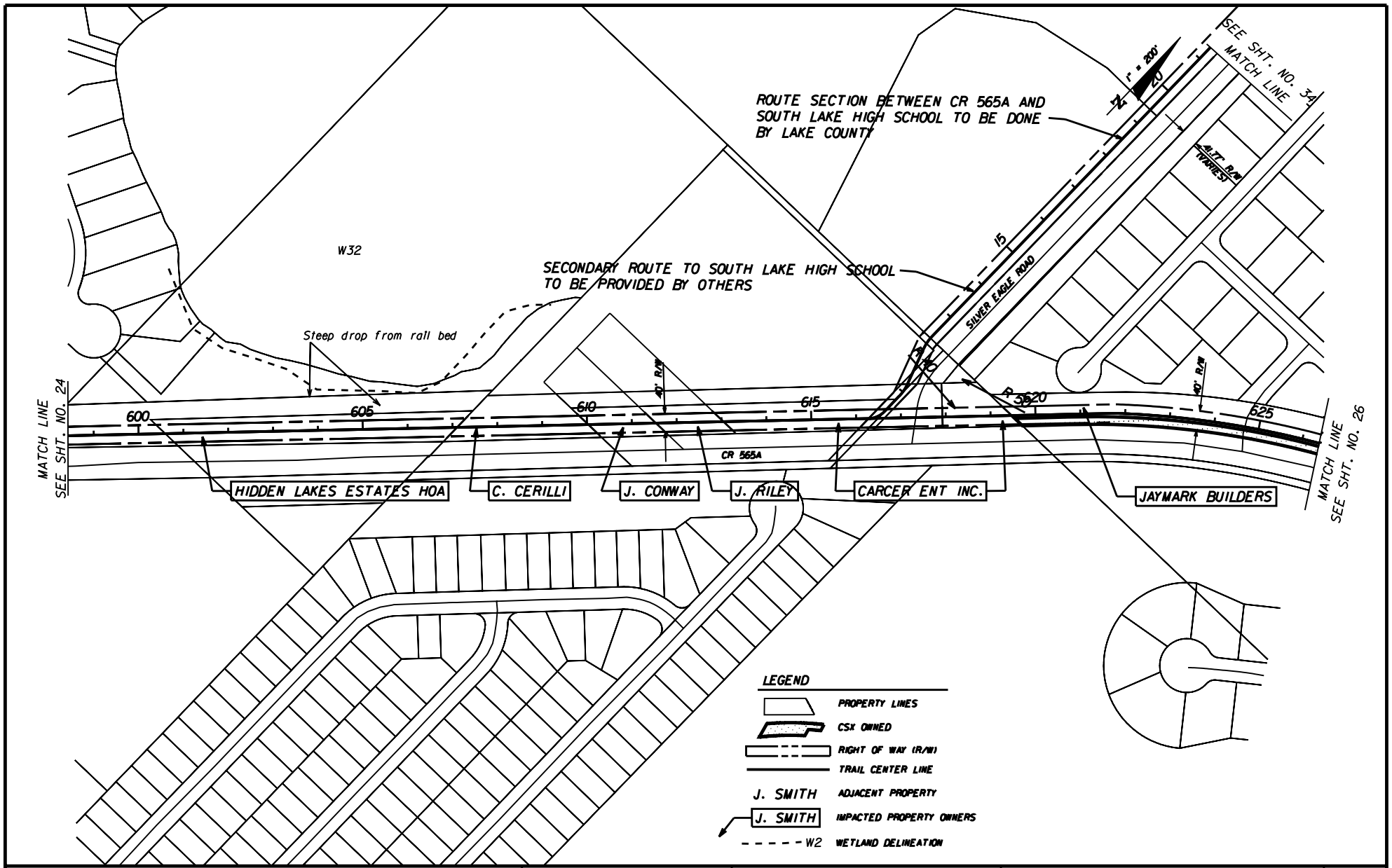

REVISIONS					
DATE	BY	DESCRIPTION	DATE	BY	DESCRIPTION

KEITH and SCHNARS, P.A.
ENGINEERS · PLANNERS · SURVEYORS
HORIZON engineering group, inc.

STATE OF FLORIDA
DEPARTMENT OF TRANSPORTATION

ROAD NO.	COUNTY	FINANCIAL PROJECT ID
N/A	LAKE	410825-1-22-01

SOUTH LAKE TRAIL
PLAN SHEET

SHEET NO. 25

$USER$ $DATE$ $TIME$ $FILE$

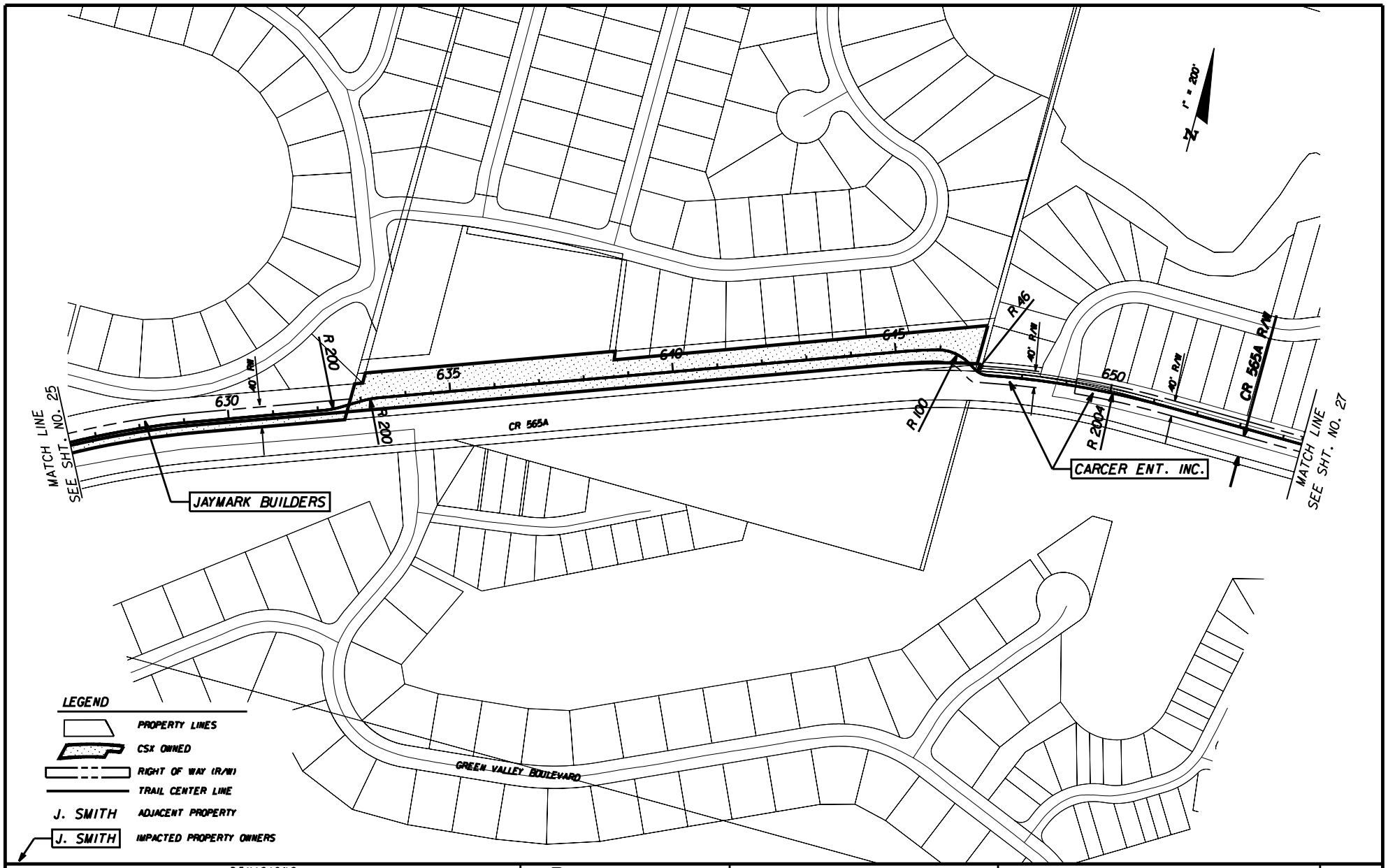

REVISIONS					
DATE	BY	DESCRIPTION	DATE	BY	DESCRIPTION

KEITH and SCHNARS, P.A.
ENGINEERS · PLANNERS · SURVEYORS
HORIZON engineering group, inc.

STATE OF FLORIDA
DEPARTMENT OF TRANSPORTATION

ROAD NO.	COUNTY	FINANCIAL PROJECT ID
N/A	LAKE	410825-1-22-01

SOUTH LAKE TRAIL
PLAN SHEET

SHEET NO. 26

$USER$ $DATE$ $TIME$ $FILE$

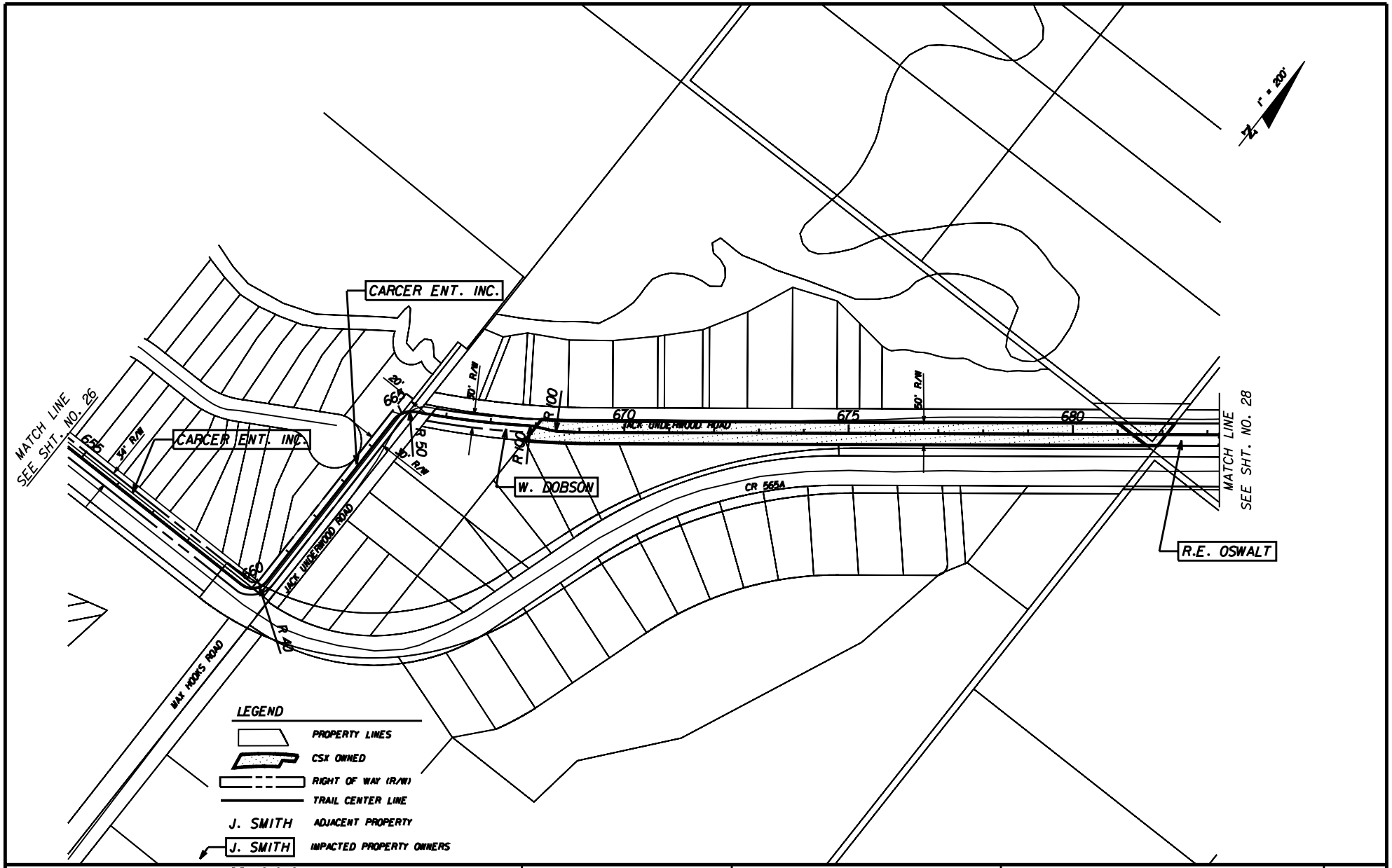

REVISIONS					
DATE	BY	DESCRIPTION	DATE	BY	DESCRIPTION

KEITH and SCHNARS, P.A.
ENGINEERS · PLANNERS · SURVEYORS
HORIZON engineering group, Inc.

STATE OF FLORIDA
DEPARTMENT OF TRANSPORTATION

ROAD NO.	COUNTY	FINANCIAL PROJECT ID
N/A	LAKE	410825-1-22-01

SOUTH LAKE TRAIL
PLAN SHEET

SHEET NO. 27

$USER$ $DATE$ $TIME$ $FILE$

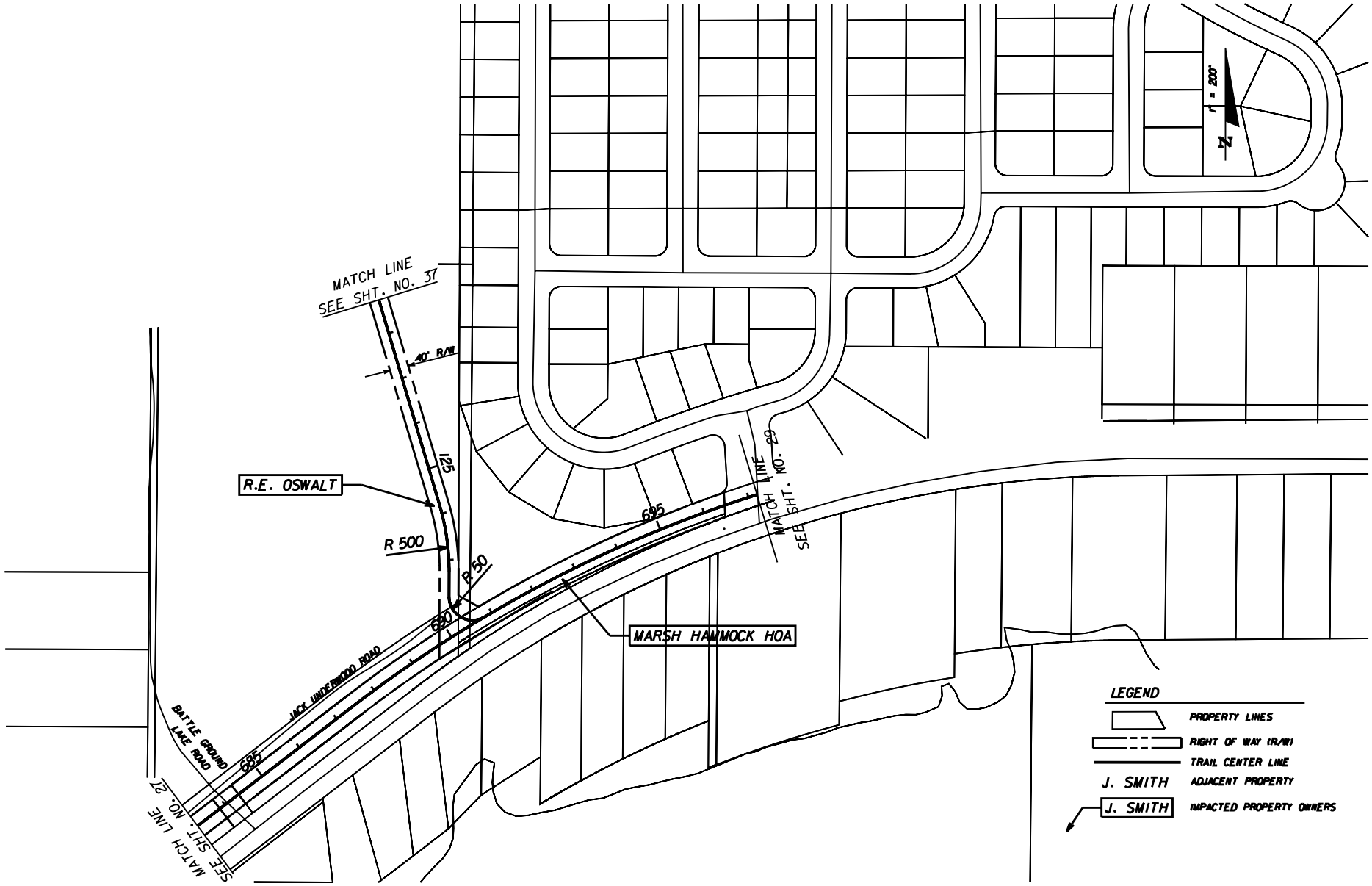

REVISIONS					
DATE	BY	DESCRIPTION	DATE	BY	DESCRIPTION

KEITH and SCHNARS, P.A.
ENGINEERS · PLANNERS · SURVEYORS
HORIZON engineering group, inc.

STATE OF FLORIDA
DEPARTMENT OF TRANSPORTATION

ROAD NO.	COUNTY	FINANCIAL PROJECT ID
N/A	LAKE	410825-1-22-01

SOUTH LAKE TRAIL
PLAN SHEET

SHEET NO. 28

$USER$ $DATE$ $TIME$ $FILE$

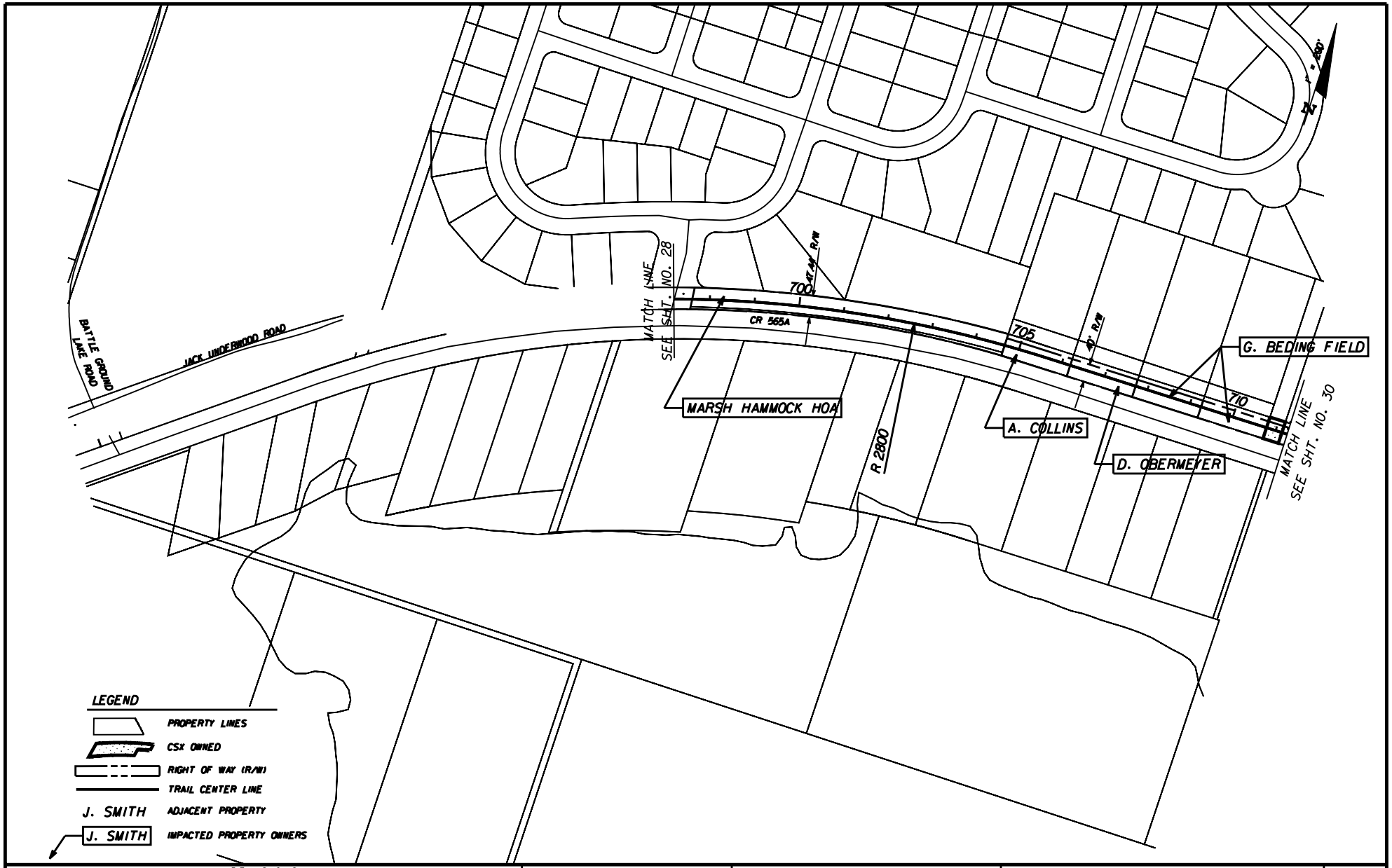

REVISIONS					
DATE	BY	DESCRIPTION	DATE	BY	DESCRIPTION

KEITH and SCHNARS, P.A.
ENGINEERS · PLANNERS · SURVEYORS
HORIZON engineering group, inc.

STATE OF FLORIDA
DEPARTMENT OF TRANSPORTATION

ROAD NO.	COUNTY	FINANCIAL PROJECT ID
N/A	LAKE	410825-1-22-01

SOUTH LAKE TRAIL
PLAN SHEET

SHEET NO. 29

$USER$ $DATE$ $TIME$ $FILE$

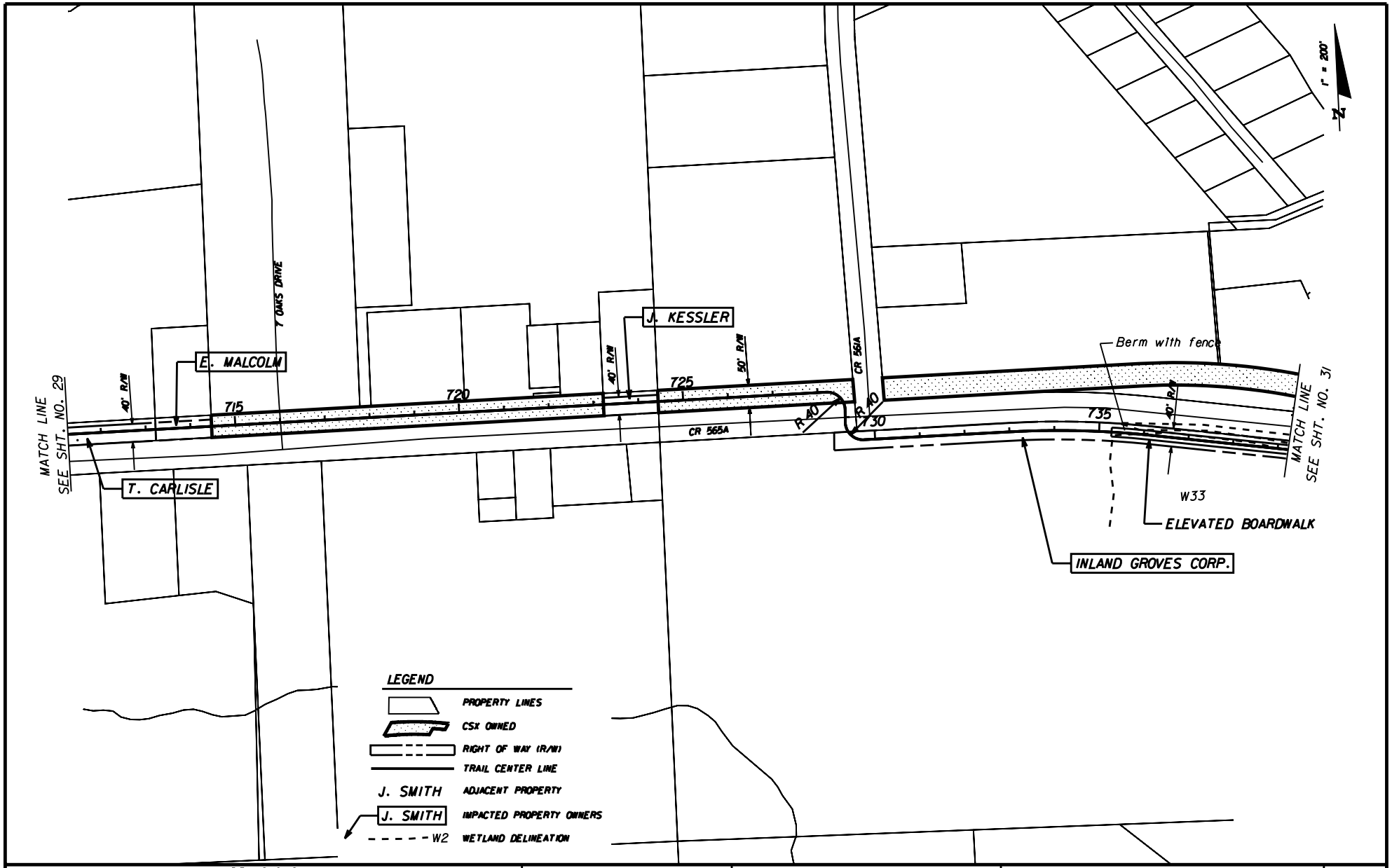

REVISIONS					
DATE	BY	DESCRIPTION	DATE	BY	DESCRIPTION

KEITH and SCHNARS, P.A.
ENGINEERS · PLANNERS · SURVEYORS
HORIZON engineering group, Inc.

STATE OF FLORIDA
DEPARTMENT OF TRANSPORTATION

ROAD NO.	COUNTY	FINANCIAL PROJECT ID
N/A	LAKE	410825-1-22-01

SOUTH LAKE TRAIL
PLAN SHEET

SHEET NO. 30

$USER$ $DATE$ $TIME$ $FILE$

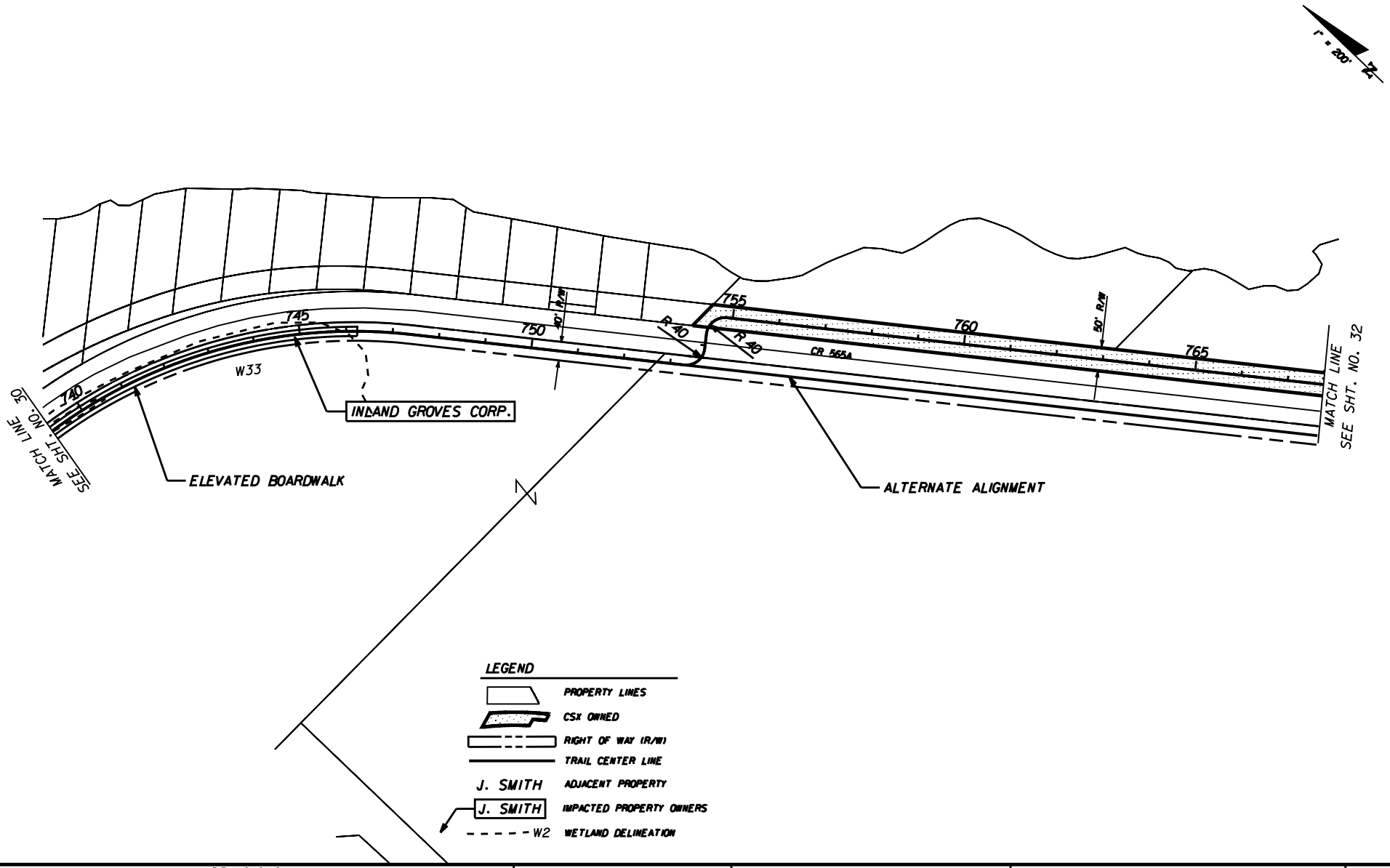

REVISIONS					
DATE	BY	DESCRIPTION	DATE	BY	DESCRIPTION

KEITH and SCHNARS, P.A.
ENGINEERS · PLANNERS · SURVEYORS
HORIZON engineering group, inc.

STATE OF FLORIDA
DEPARTMENT OF TRANSPORTATION

ROAD NO.	COUNTY	FINANCIAL PROJECT ID
N/A	LAKE	410825-1-22-01

SOUTH LAKE TRAIL
PLAN SHEET

SHEET NO. 31

$USER$ $DATE$ $TIME$ $FILE$

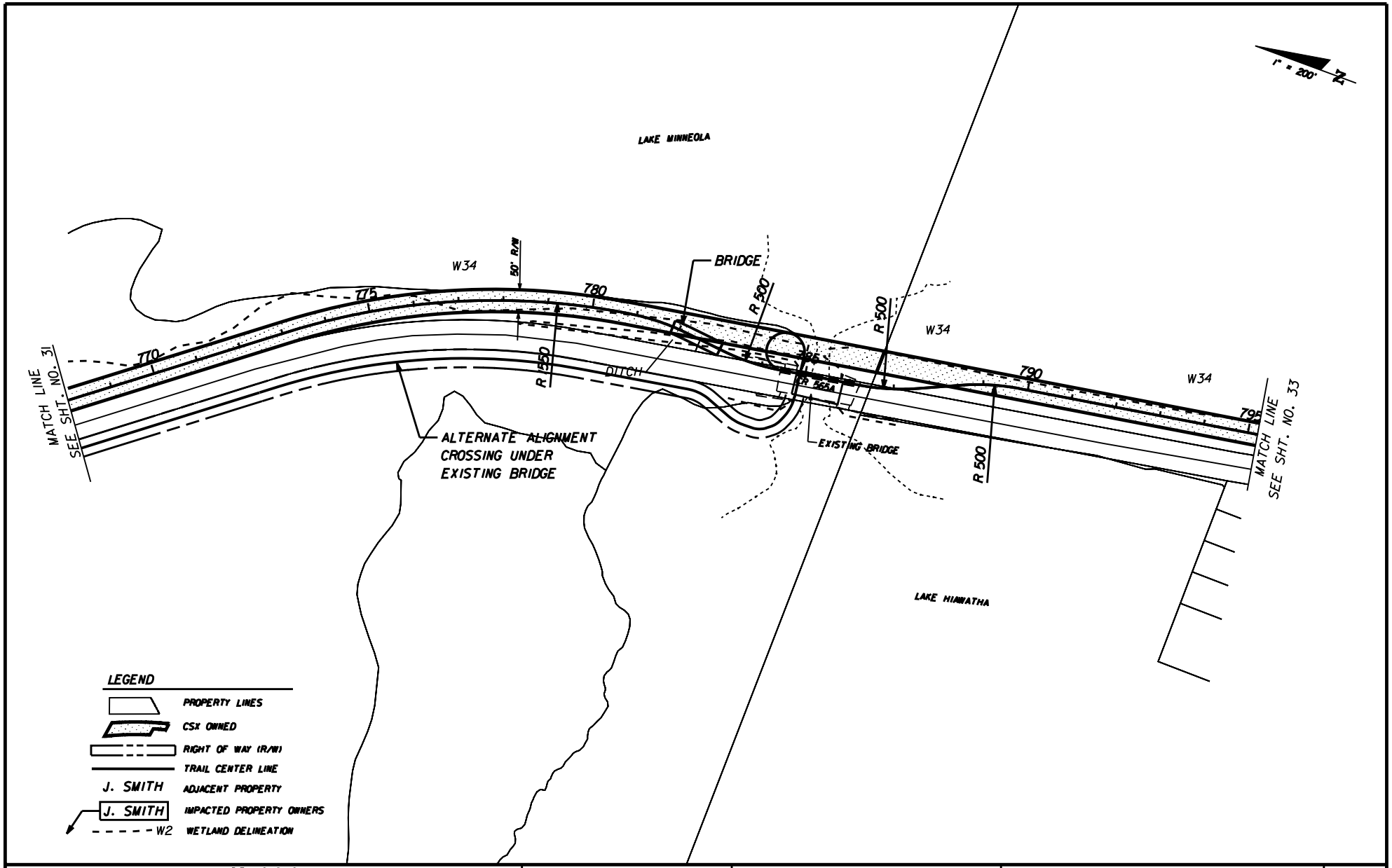

REVISIONS					
DATE	BY	DESCRIPTION	DATE	BY	DESCRIPTION

KEITH and SCHNARS, P.A.
ENGINEERS · PLANNERS · SURVEYORS
HORIZON engineering group, inc.

STATE OF FLORIDA
DEPARTMENT OF TRANSPORTATION

ROAD NO.	COUNTY	FINANCIAL PROJECT ID
N/A	LAKE	410825-1-22-01

SOUTH LAKE TRAIL
PLAN SHEET

SHEET NO. 32

$USER$ $DATE$ $TIME$ $FILE$

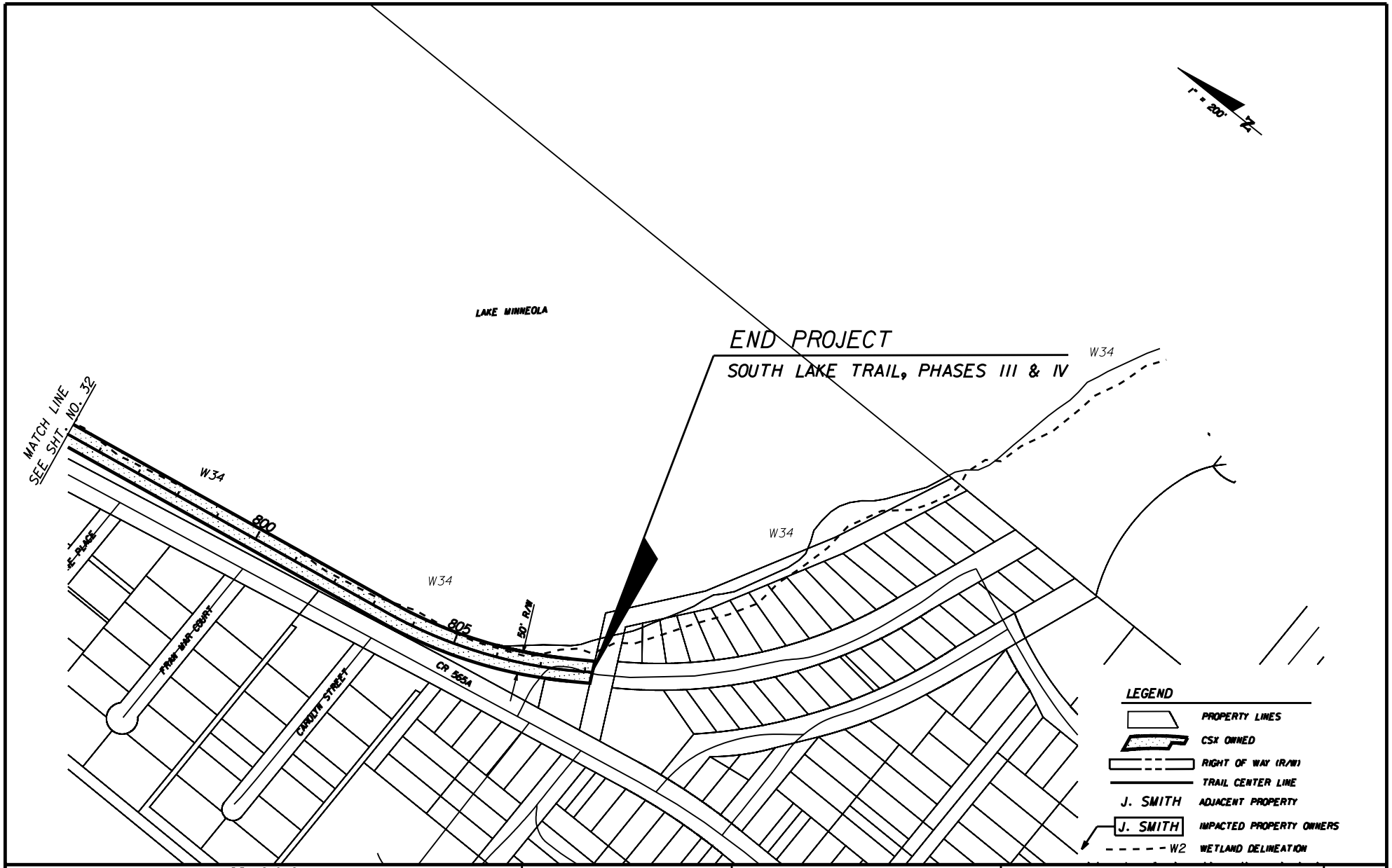

REVISIONS					
DATE	BY	DESCRIPTION	DATE	BY	DESCRIPTION

KEITH and SCHNARS, P.A.
ENGINEERS · PLANNERS · SURVEYORS
HORIZON engineering group, inc.

STATE OF FLORIDA
DEPARTMENT OF TRANSPORTATION

ROAD NO.	COUNTY	FINANCIAL PROJECT ID
N/A	LAKE	410825-1-22-01

SOUTH LAKE TRAIL PLAN SHEET

SHEET NO. 33

$USER$ $DATE$ $TIME$ $FILE$

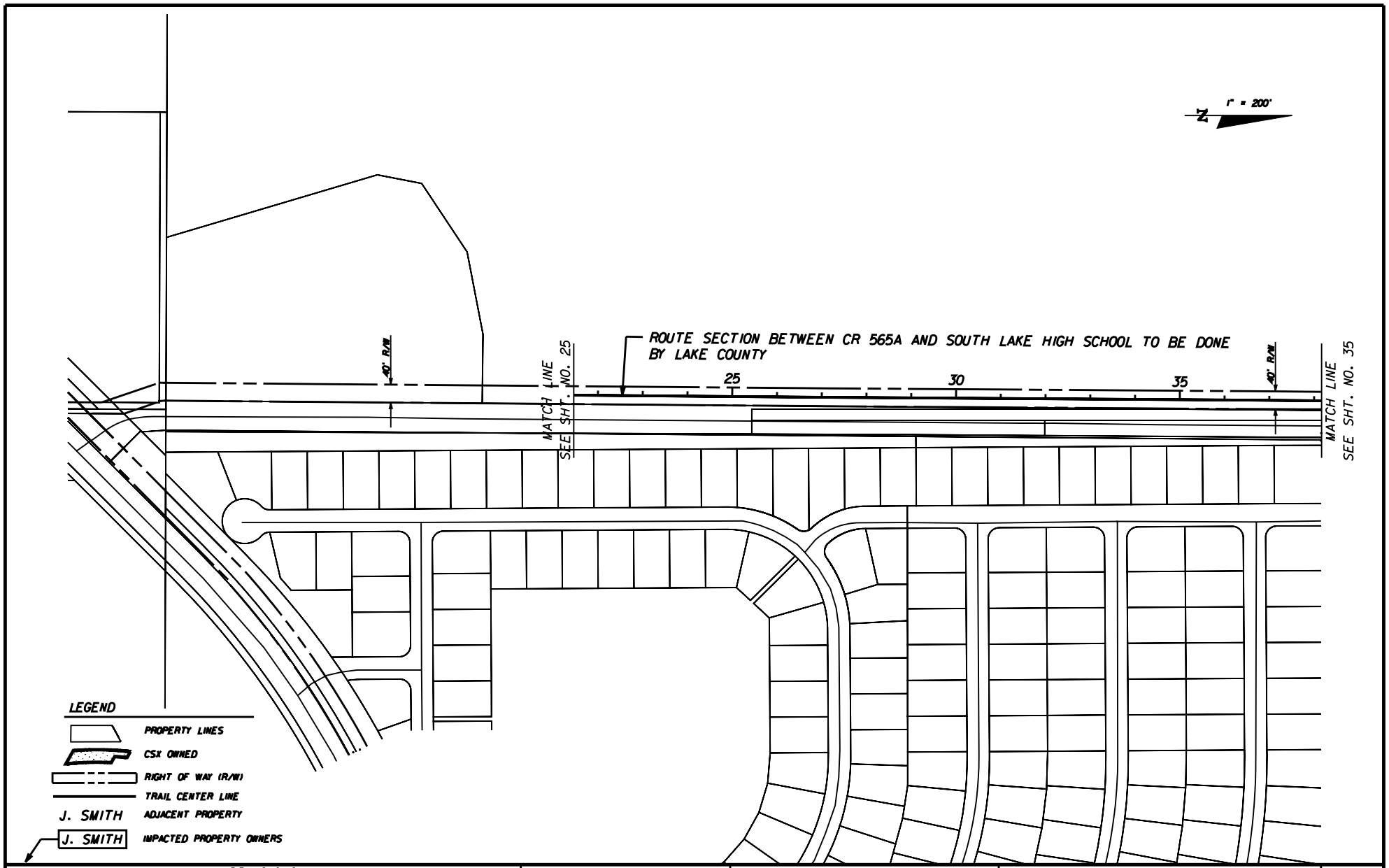

REVISIONS					
DATE	BY	DESCRIPTION	DATE	BY	DESCRIPTION

KEITH and SCHNARS, P.A.
ENGINEERS · PLANNERS · SURVEYORS
HORIZON engineering group, inc.

STATE OF FLORIDA
DEPARTMENT OF TRANSPORTATION

ROAD NO.	COUNTY	FINANCIAL PROJECT ID
N/A	LAKE	410825-1-22-01

SOUTH LAKE TRAIL PLAN SHEET

SHEET NO. 34

$USER$ $DATE$ $TIME$ $FILE$

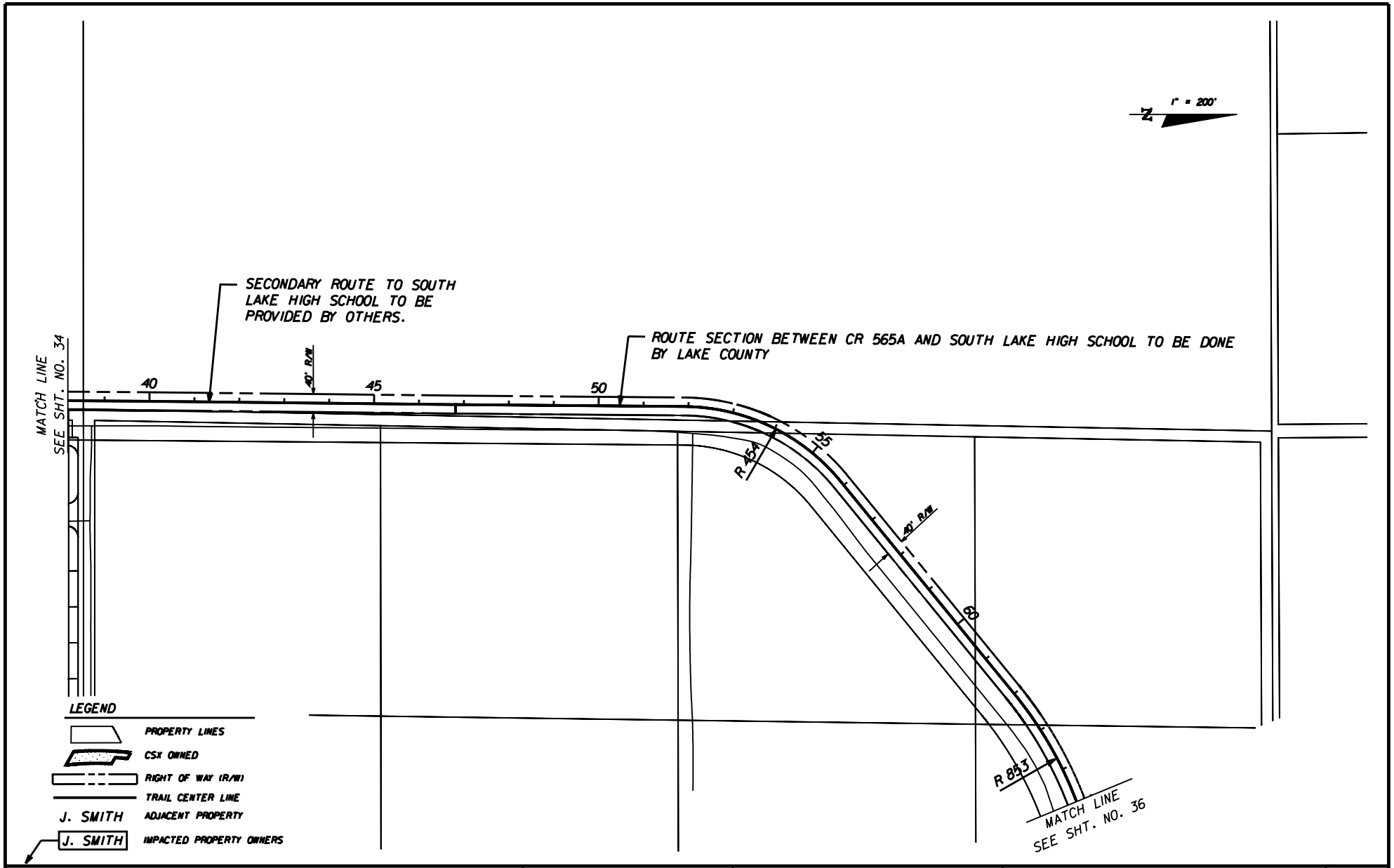

REVISIONS					
DATE	BY	DESCRIPTION	DATE	BY	DESCRIPTION

KEITH and SCHNARS, P.A.
ENGINEERS · PLANNERS · SURVEYORS
HORIZON engineering group, inc.

STATE OF FLORIDA
DEPARTMENT OF TRANSPORTATION

ROAD NO.	COUNTY	FINANCIAL PROJECT ID
N/A	LAKE	410825-1-22-01

SOUTH LAKE TRAIL PLAN SHEET

SHEET NO. 35

$USER$ $DATE$ $TIME$ $FILE$

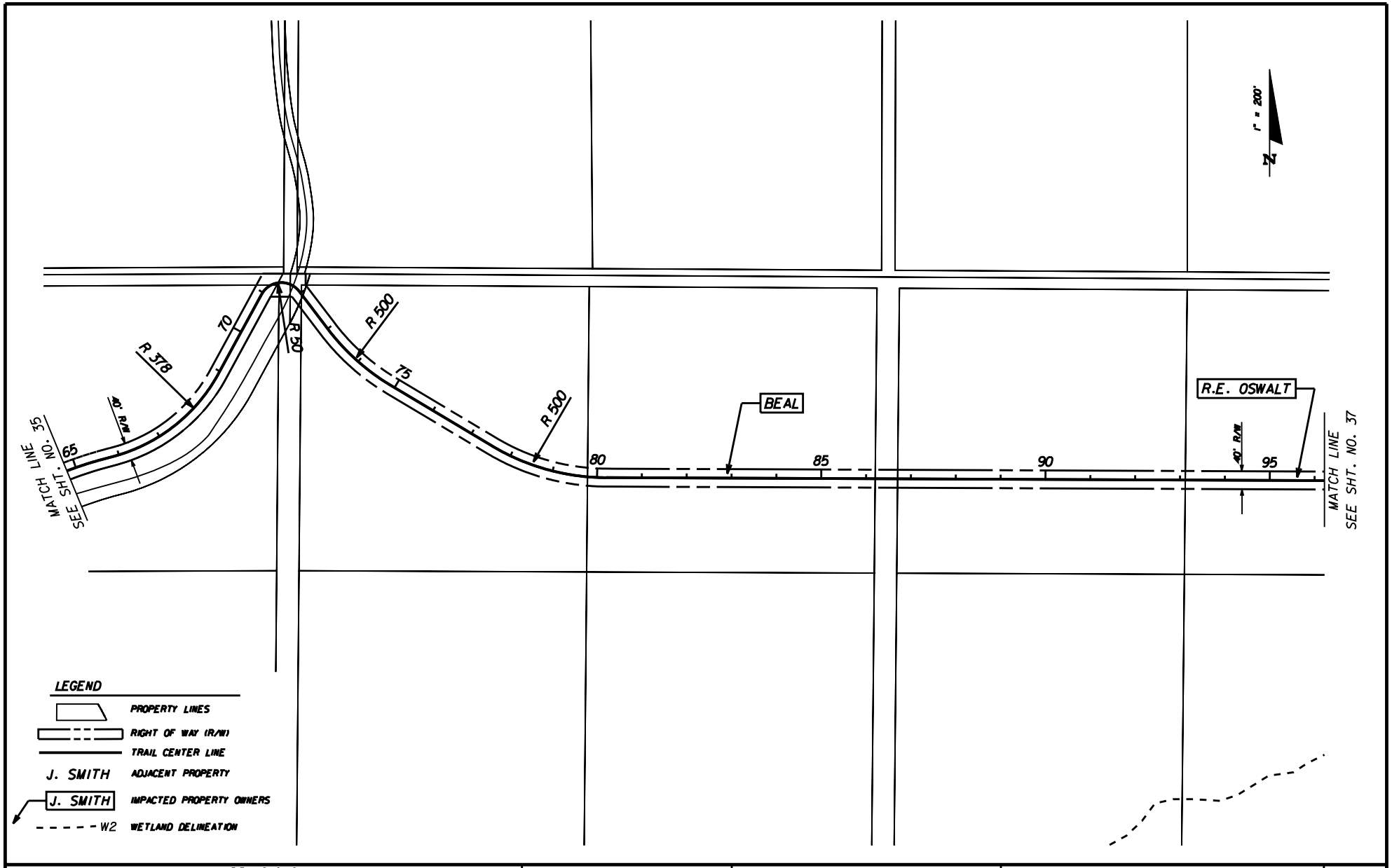

REVISIONS					
DATE	BY	DESCRIPTION	DATE	BY	DESCRIPTION

KEITH and SCHNARS, P.A.
ENGINEERS · PLANNERS · SURVEYORS
HORIZON engineering group, Inc.

STATE OF FLORIDA
DEPARTMENT OF TRANSPORTATION

ROAD NO.	COUNTY	FINANCIAL PROJECT ID
N/A	LAKE	410825-1-22-01

SOUTH LAKE TRAIL
PLAN SHEET

SHEET NO. 36

$USER$ $DATE$ $TIME$ $FILE$

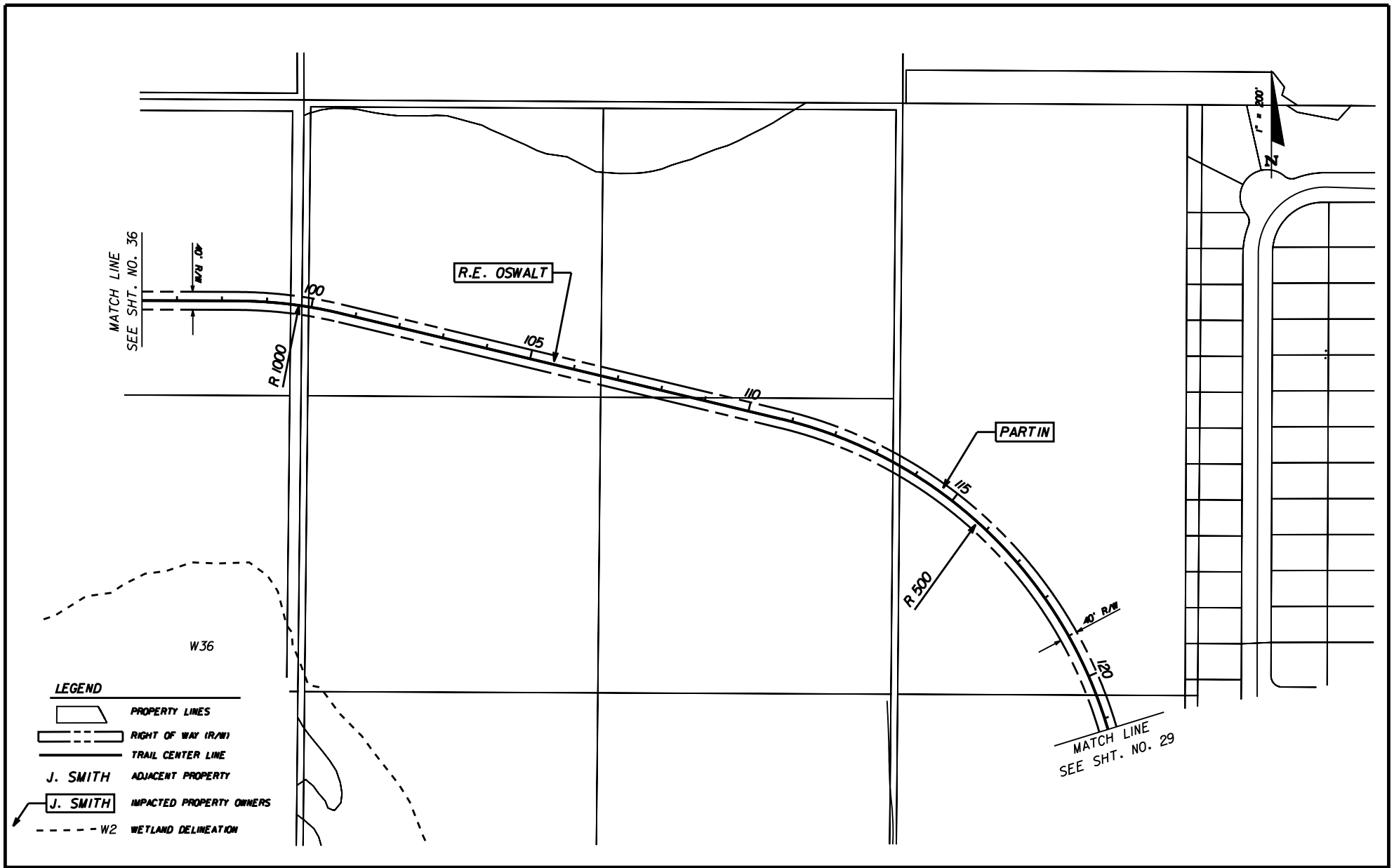

REVISIONS					
DATE	BY	DESCRIPTION	DATE	BY	DESCRIPTION

KEITH and SCHNARS, P.A.
ENGINEERS · PLANNERS · SURVEYORS
HORIZON engineering group, inc.

STATE OF FLORIDA
DEPARTMENT OF TRANSPORTATION

ROAD NO.	COUNTY	FINANCIAL PROJECT ID
N/A	LAKE	410825-1-22-01

SOUTH LAKE TRAIL
PLAN SHEET

SHEET NO. 37

$USER$ $DATE$ $TIME$ $FILE$